ACOUSTICAL COVERS FOR OFFICE MACHINES

Filed June 2, 1969 3 Sheets-Sheet 1

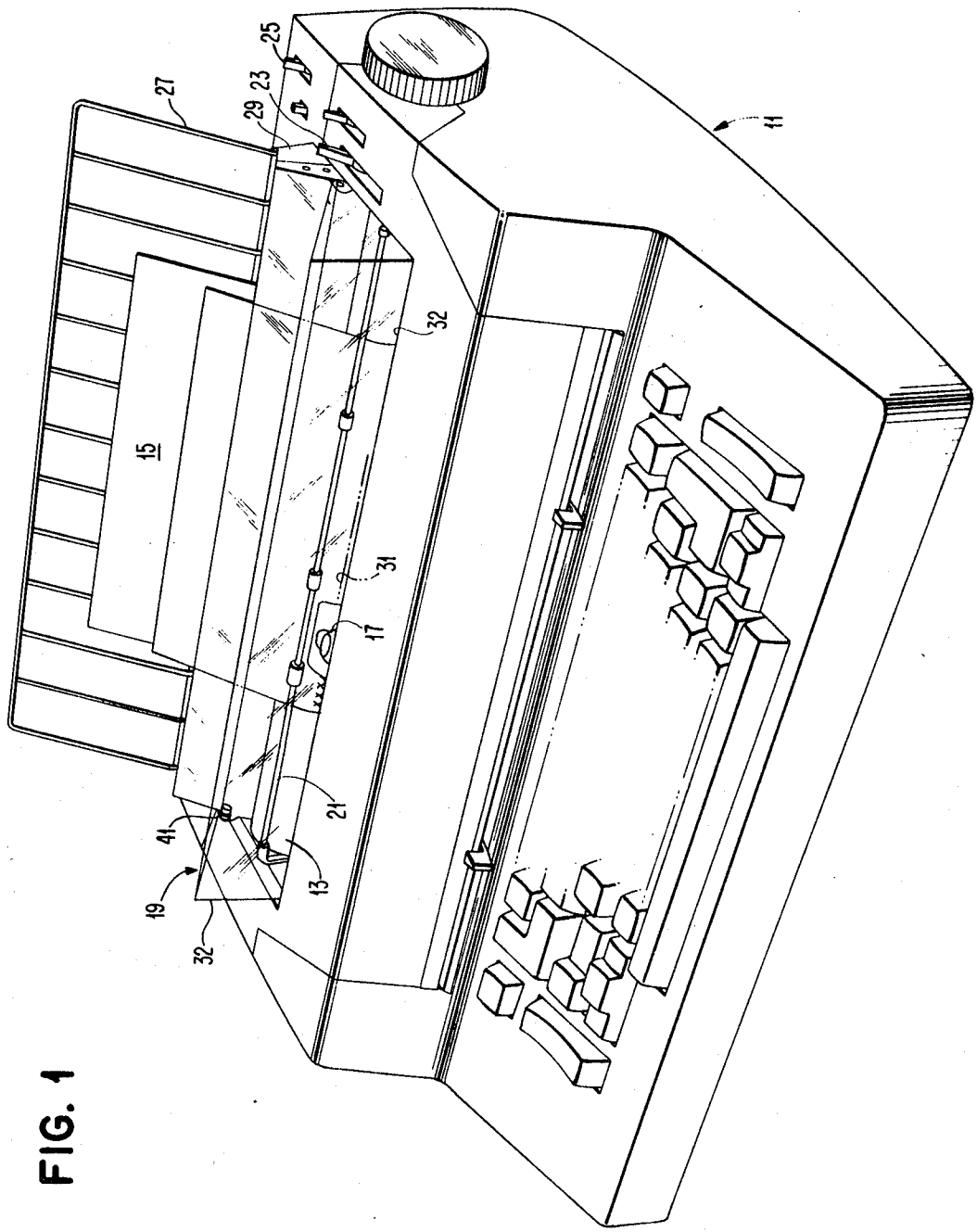

FIG. 1

INVENTORS.
WILLIAM L. BUEHNER
DONALD L. GREER
RICHARD W. McCORNACK
PAUL L. O'BRIAN
HENRY W. SIMPSON

BY John W Givin, Jr
ATTORNEY.

ACOUSTICAL COVERS FOR OFFICE MACHINES

Filed June 2, 1969 3 Sheets-Sheet 2

FIG. 4

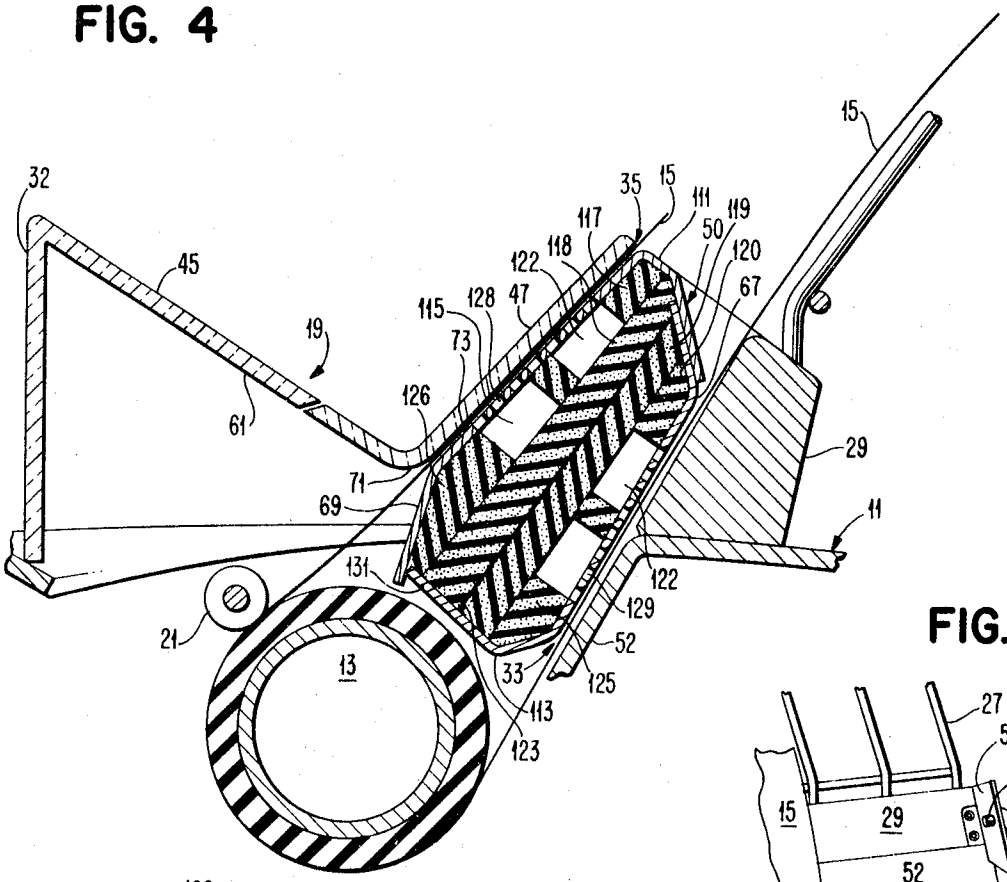

FIG. 3

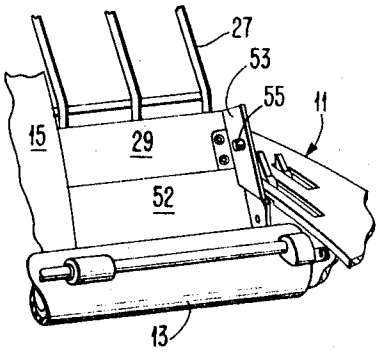

FIG. 7

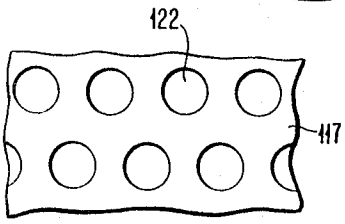

FIG. 2

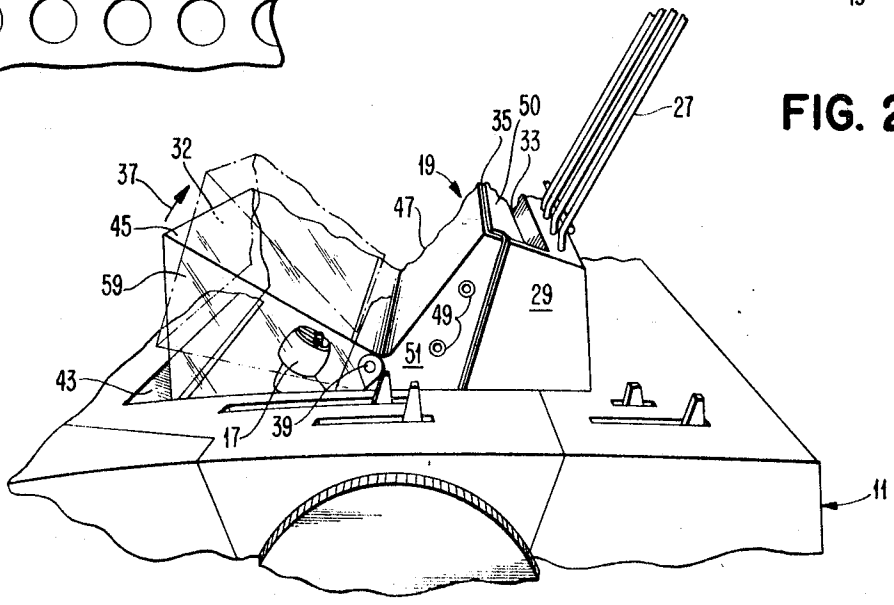

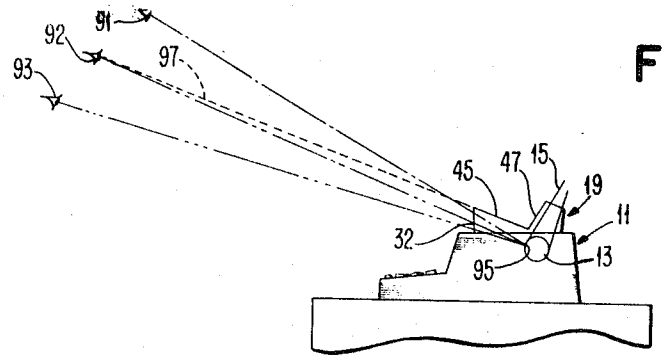

FIG. 5

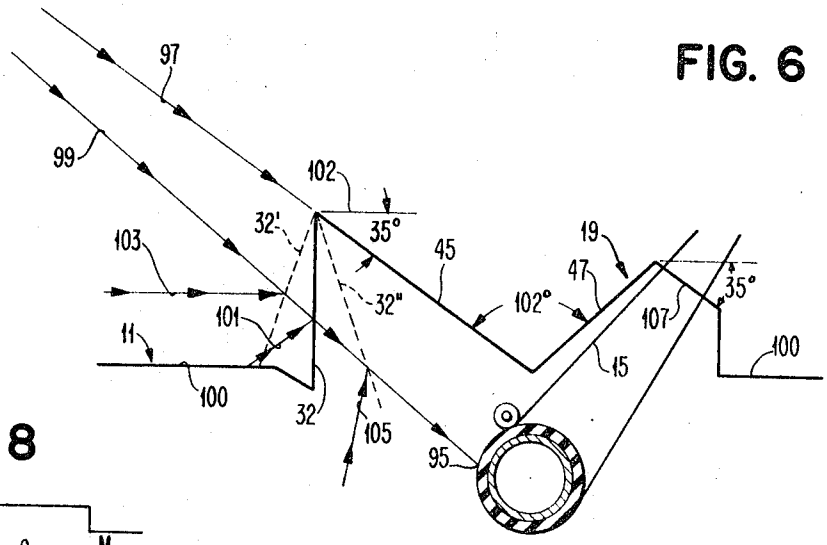

FIG. 6

FIG. 8

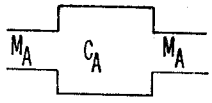

FIG. 9

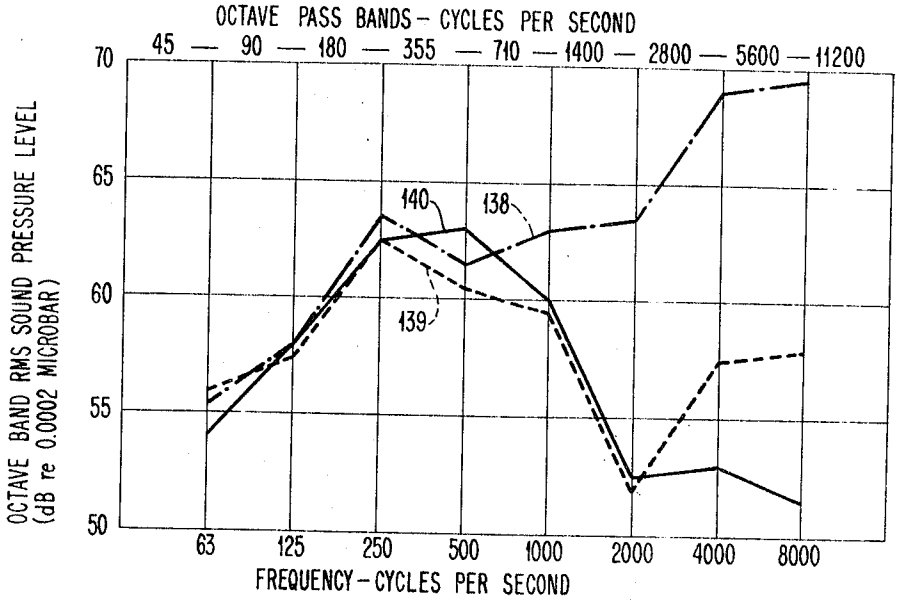

United States Patent Office

3,513,938

Patented May 26, 1970

1

3,513,938

ACOUSTICAL COVERS FOR OFFICE MACHINES

William L. Buehner, Donald L. Greer, Richard W. McCornack, Paul L. O'Brian, and Henry W. Simpson, Lexington, Ky., assignors to International Business Machines Corporation, Armonk, N.Y., a corporation of New York

Filed June 2, 1969, Ser. No. 829,406
Int. Cl. F01n *1/02;* H04l *15/24*
U.S. Cl. 181—33 9 Claims

ABSTRACT OF THE DISCLOSURE

A low profile acoustical cover for an office machine adapted to fit over the opening in the machine housing which accommodates paper feeding and handling. The acoustical cover incorporates a plastic hood having angled walls enabling operator observation of the printing on the paper with a minimum of glare from the ambience of the machine and an acoustic device which is placed in proximity to paper entrance and exit slots in the plastic hood to prevent the emission of undesirable audible sounds therethrough. The plastic hood pivots to enable ready access to the machine mechanism and to the paper being operated on and the entire acoustical cover is readily removable from the machine.

CROSS REFERENCE TO RELATED APPLICATION

The following application is assigned to the same assignee as the present application.

U.S. patent application Ser. No. 15,231, filed Dec. 30, 1968, entitled "Typewriter or the Like," Eliot F. Noyes, inventor.

OTHER REFERENCES

The following additional reference is of interest:

IBM Customer Engineering Instruction Manual for the IBM "Selectric" [1] Composer, Form Number 241–5340–0, dated October, 1966. [1]

Brief background of the invention

Field

This invention relates to an acoustical cover for an office machine, and more particularly, to an improved acoustical cover for the platen area of a typewriter.

Description of the prior art

Typewriter machines or the like which incorporate paper feeding platens which are strikable by type elements generally emit a substanital amount of noise into their environment. This noise can be excessive, especially when the machine is operated from a secondary media, such as magnetic or paper tape or from a transmission line at its maximum output rate for long periods of time in the environment of a business office. Much of the noise which is emitted from the machine, is emitted through the opening in the machine housing above the platen which facilitates paper handling and there have been many attempts made in the past to absorb this noise. The prior art attempts may be classified into two general categories: (1) large cabinets which completely surround the typewriter and (2) smaller enclosures adapted to fit over the opening in the typewriter housing above the platen. The large cabinet devices are usually constructed with a transparent window through which the operator can observe the printing operation. The paper is generally maintained completely within the enclosure, although several such prior art devices include slots through which the paper is fed. In order to prevent sound from escaping through the paper slots, rubber rollers or gasket type devices have been utilized to provide a relatively tight seal with the paper. While these cabinet devices have been successful in appreciably reducing the sound emanating from a typewriter or the like device, none of them have met with any degree of commercial success because of their bulkiness and because of the paper handling problems which they create. That is, when such a device encloses a typewriter, it is necessary for the operator to open doors to reach into the device in order to align paper, make corrections and in some instances to view the printed lines. Additionally, these devices are generally not designed for optimum viewing of the line being printed and those preceding it. In fact, in many instances, these devices incorporate lights to enable the operator to see the print line and also contain mirrors for reflecting the print line to a position where it can be viewed by the operator.

As described above, a second class of acoustic hoods exist in the art which cover only the platen opening in the machine housing. Some of these devices form only a partial covering for the housing opening to thereby facilitate the feeding of paper and are virtually ineffective to reduce emitted sound. Instead, they direct the emitted sound away from the operator without affecting the sound level within the office or environment in which the machine is located. Other such devices form a complete covering for the platen opening thereby appreciably reducing the emitted sound, but they create paper handling problems. That is, it is necessary to either maintain the paper completely within the cover thereby creating operator visibility problems or to feed the paper through an opening having a seal adapted to coact with the paper to prevent the emission of sound. When such a seal is utilized, it forms an obstruction which makes it difficult for the operator to properly align the paper with respect to the platen. Additionally, such prior art covers usually make it quite difficult for the operator to access the print line to make corrections thereon without necessitating the removal of the cover. Further, many such prior art devices incorporate mirrors or the like to provide the operator with a view of the line being printed thereby creating operator non-familarity problems with the equipment.

Summarizing, the prior art teaches two basic approaches to reduce the noise emitted through the platen opening of a typewriter or the like machines: enclosure of the entire operating mechanism within a large hood with the resultant loss of ease of paper handling ability and viewing ability and enclosure of the platen opening with a resulting lack of noise reduction or a resulting lack of visibility and ease of paper handling.

SUMMARY

In order to overcome the above noted shortcomings of the prior art and to provide an acoustical cover for office machines which greatly reduces the noise emitted therefrom without appreciably disturbing the visibility of the printed lines and without appreciably disturbing the paper handling manipulations which the operator is accustomed to, the present invention provides an acoustical cover adapted to fit over the platen opening and having angled walls enabling ready operator observation of that portion of the paper which has been printed upon, and an acoustical device mounted in close proximity to the paper entrance and exit slots of the cover for eliminating the audible sound which would otherwise escape through the slots into the ambience of the machine. The walls of the acoustical cover are so angled to pre-

[1] (Trademark).

vent glare or unwanted reflections at the normal operator viewing position as well as to allow pivotal motion of a portion of the acoustical cover to an open or inoperative position to enable the operator to rapidly access the platen area for corrections, and for type element and ribbon changing operations. The acoustic device forms an integral part of the acoustical cover and is mounted directly over the platen area and forms unobstructed slots with the angled walls of the acoustical cover to enable paper to be readily fed into and out of the platen area. Additionally, the proximity of the acoustic device to the paper slots and to the platen enables it to dissipate sounds that would otherwise emanate from the slots.

An additional unique feature of the present invention is its relatively small size which enables it to be readily removed from or placed on the machine with minimum difficulty. When it is not being used, it can be stored in a small volume.

The foregoing and other features and advantages of this invention will be apparent from the following more particular description of the preferred embodiments of the invention as illustrated in the accompanying drawings.

In the drawings:

FIG. 1 is a perspective sketch of a typical typewriter having the acoustical cover of the present invention mounted thereon.

FIG. 2 is a perspective sketch of a partial end view of a typical typewriter having the acoustical cover of the present invention mounted thereon.

FIG. 3 is a perspective sketch of a partial front view of a typical typewriter which has been modified to receive the acoustical cover of the present invention.

FIG. 4 is a cross-section end elevational view of the acoustical cover of the present invention and a portion of a typewriter.

FIG. 5 is a schematic diagram of typical operator viewing positions with respect to a typewriter having the acoustical cover of the present invention mounted thereon.

FIG. 6 is a schematic diagram of light rays and reflected light rays along the typical operator's line of sight to the acoustical cover of the present invention.

FIG. 7 is a partial front view of the foam strips of the acoustic device.

FIG. 8 is a diagram of a basic low pass acoustic slot filter.

FIG. 9 is a frequency plot showing the sound level emitted from a typical typewriter compared with that of various configurations of the acoustical cover of the present invention.

DESCRIPTION

Referring now to the drawings, and more particularly to FIG. 1 thereof, a perspective sketch of a typical typewriter having the acoustical cover of the present invention mounted thereon is depicted. The typewriter **11** is a single element typewriter incorporating a typewriting mechanism similar to that described in U.S. Pats. 2,879,876 and 2,919,002 assigned to the same assignee as the present application. The outer cover design of the the typewriter **11** enclose the platen **13** and paper bail referenced copending application of Eliot F. Noyes and includes an opening above the platen **13** to facilitate operator access to the paper **15** and the print element **17**. The acoustical cover **19** is adapted to fit over the platen opening and rests upon the outer covers of the typewriter **11** as will be described.

When in its fully operable position as depicted in FIG. 1, the acoustical cover **19** and the outer covers of the typewriter **11** enclose the platen **13** and paper bail **21** as well as the print element **17** and thus forms a container therefore. In order to facilitate the feeding of paper **15** around the platen **13** without necessitating the removal or opening of the acoustical cover **19**, a paper bail release lever **23** is connected to the paper bail **21** to effect the conventional movement of the paper

bail toward and away from the platen **13**. Additionally, operation of the feed roll release lever **25** effects the pivoting of a paper stacker (not shown) against the platen to facilitate the alignment of paper as it is inserted into the typewriter. The operation of this mechanism can be identical to that described in the afore-referenced IBM "Selectric" composer instruction manual at page 15–1.

An additional modification which may be made to the typewriter machine **11** to facilitate paper handling when the acoustical cover **19** is mounted thereon, is the inclusion of a paper guide **27** upon which the paper may rest when it is being inserted into the machine. The paper guide **27** can be mounted upon the fixedly secured acoustic cover support member **29**.

When it is desirous to insert the paper **15** into the typewriter **11**, the operator moves the feed roll release lever **25** to effect the disengagement of the feed rolls (not shown) from the platen **13**, the engagement of the paper stackers (not shown) with the platen, and the movement of the paper bail **21** from the platen. Thereafter, the paper **15** is inserted into a slot (not shown) created between the acoustical cover **19** and the cover support member **29** until the paper rests upon the paper stackers. With the paper thus squarely aligned, the feed roll release lever **25** is returned to its initial position thereby effecting the engagement of the feed rolls with the platen and the subsequent disengagement of the paper stackers from the platen. Thereafter, the platen **13** is rotated in the conventional manner effecting the feeding of the paper around the platen past the type element **17**. Manipulation of the paper bail release lever **23** returns the paper bail **21** to the platen after the paper is fed thereunder in order to insure contact of the paper **15** with the platen **13**. Continued rotation of the platen will cause the paper to be fed through a second slot (not shown) in the acoustical cover **19** as will be described hereinafter.

With the paper **15** thus inserted in the machine, the operator can readily view the print line **31** through the transparent from wall **32** of the acoustical cover **19**. Additionally, the operator can also view the lines immediately preceding the print line through the front wall **32**.

Referring now to FIG. 2 of the drawings, a perspective sketch of a partial end view of the typewriter **11** having the acoustical cover **19** mounted thereon is depicted. When thus mounted on the typewriter, the acoustical cover **19** forms a paper passageway, slot **33** with the cover support member **29** through which paper may be inserted into the typewriter. A second paper passageway, slot **35** formed within the acoustical cover is provided for paper to emanate thereform. The acoustical cover, when viewed from its end, is in the general shape of the letter M. The left-hand portion of the cover as viewed pivots in the direction of arrow **37** about pivot studs **39** and **41** (FIG. 1) from a position wherein the front wall **32** engages the lip surface **43** of the typewriter cover to a position wherein the wall **45** of the acoustical cover rests against the wall **47** of the acoustical cover. In its thus open or inoperative position, the operator may readily access the print element **17** or the paper **15** (FIG. 1) at the writing line in order to make corrections, print element changes, etc. A partially open cover is depicted in phantom.

A pair of mounting screws **49** and a similar pair (not shown) located at the opposite end of the acoustical cover **19** fixedly secure an acoustic device **50** to the end wall **51** and the opposite end wall (not shown) of the acoustical cover **19**.

Referring now to FIG. 3 of the drawings, a perspective sketch of a partial front view of the typewriter **11** which has been modified to receive the acoustical cover of the present invention is depicted. The cover support member **29** is shaped to form a continuous surface with the surface **52** of the cover of the typewriter **11**. The surface **52** corresponds to the paper table which supports the

the paper **15** as it is inserted into a standard machine. With the machine modified to receive the acoustical cover, the surface **52** along with the cover support member **29** and the paper guide **27** supports the paper **15** as it is inserted into the machine to be wound around the platen **13**. The cover support member **29** has an end wall **53** and a second opposite end wall (not shown) located at each end thereof, each of the end walls containing a stud **55** on which the acoustical cover of the present invention rests. That is, the two opposite end walls (i.e. wall **51** of FIG. 2) of the acoustical cover each have a slot (not shown) formed therein which engages the studs **55**, the uppermost portion of the slot resting against the stud when the cover is in place. A small projection (not shown) located at the end edges of the rear surface of the acoustical cover spaces the cover from the paper table and prevents it from rotating about the studs **55**.

Referring now to FIG. 4 of the drawings, a partial cross-section end elevational view of the acoustical cover **19** and a portion of the typewriter **11** is depicted. The front wall **32**, the wall **45**, the wall **47**, and the end walls (end wall **59** of FIG. 2 and the end wall (not shown) at the opposite end of the acoustical cover) are formed of a transparent acrylic resin such as Lucite or Plexiglas. The front wall **32** as well as the end walls are transparent. The wall **45** is frosted on each of its surfaces to minimize glare and unwanted reflections of the printed page off of its surfaces. Additionally, the outside surface of the wall **47** is frosted to further prevent glare and unwanted reflections. Although the wall **47** is frosted, it is sufficiantly translucent for images appearing on the paper **15** immediately thereunder to be clearly discernable. Each of the acrylic resin walls are approximately .100 inch thick in the preferred embodiment.

An acoustic device **50** is located directly above the platen **13** and extends for approximately the entire length of the platen. The rear surface **67** of the acoustic device forms the paper slot **33** with the paper table **52** of the typewriter and with a portion of the cover support member **29**. The paper **15** is fed into the machine through this slot until it engages the set of paper stackers (not shown). Thereafter, the rear feed rolls (not shown) are caused to engage the paper so that it may be fed around the platen **13** to the paper bail **21** as has been described.

As the paper **15** leaves the paper bail **21**, it is directed toward the inclined surface **69** of the acoustic device **50**. Thereafter, it is fed under the radius **71** formed by the wall **47** of the acoustical cover **19** and through the slot **35** located between the wall **47** and the front surface **73** of the acoustic device. The paper is thus fed through slot **35** without necessitating operator intervention upon the rotation of the platen **13**.

OPTICAL CHARACTERISTICS OF THE ACOUSTICAL COVER

Referring now to FIG. 5 of the drawings, a schematic diagram of typical operator viewing positions with respect to the typewriter **11** having the acoustical cover **19** of the present invention mounted thereon is depicted. Viewing position **91** is representative of the eye location of a tall operator with respect to the typewriter **11** while viewing positions **92** and **93** are respectively representative of the average typist and the short typist with respect to the typewriter **11**. Each of these viewing positions remain unaltered when the acoustical cover **19** is placed on the typewriter or removed therefrom. As can readily be seen from the diagram, each of the lines of sight from the respective viewing positions to the print point **95** pass through the transparent front wall **32** of the acoustic cover. It will further be noted that operator visibility of the paper **15** through the front wall **32** is at a maximum at the viewing position **93** and the minimum at the viewing position **91** since all printing will appear on the paper **15** at or above the print point **95**. Since the wall **45** diffuses light rays, viewing of paper **15** through the surface **45** is precluded. Thus, at viewing positions **91** and **93**, a portion of the previously printed text is not clearly discernable since the surface **45** interferes with the operator's view through the wall **32** of this text. It should be noted, however, that the operator at viewing position **91** can see the print line as well as 3 or 4 lines there-above while the operator at viewing position **93** can see the print line as well as 9 or 10 lines there-above. Thereafter, a slight discontinuity in the view of the printed lines appears until the operator has a direct line of sight through the wall **47** to the paper **15**. The wall **45** is angled so as to correspond to the line of sight **97** between the average viewing position **92** and the upper-most portion of the front wall **32** thereby effecting a minimum blockage of the average operator's view by the wall **45**.

It has been found experimentally that the viewing position **91** of a typical tall female operator is 15½ inches above the axis of the platen **13** and 14½ inches horizontally away from the axis of the platen **13**. The viewing position **93** represents the viewing position of a short female operator typically found to be 13 inches above the axis of the platen and 17¾ inches horizontally away from the platen.

Referring now to FIG. 6 of the drawings. A schematic diagram of light rays and reflected light rays along the typical operator's line of sight to the acoustical cover of the present invention is depicted. The light ray **99** is representative of the typical operator's line of sight to the transparent wall **32** of the acoustical cover **19** and thence to the print point **95**. Light which is reflected off of the front wall **32** back along the line of sight to the operator thereby representing glare or unwanted reflections must emanate from the top surface **100** of the typewriter **11** as depicted by the light ray **101** since the angle of reflection along the light ray **99** is equal to the angle of incidence along the light ray **101** with respect to the front wall **32**. By utilizing a dark top surface **100** (e.g. an outer cover painted black) unwanted reflection is virtually eliminated.

The angle that the front wall **32** makes with horizontal plane **102** may be varied as shown by the broken lines **32'** and **32''**. When the front wall **32** is caused to slope outward as depicted by the front wall **32'**, light rays **103** are caused to be reflected off of the surface of the front wall **32'** and transmitted back along the operator's line of vision as depicted by the light ray **99**. The light ray **103** is depicted as a horizontal light ray. In most environments, such horizontal light rays emitting from light sources such as windows would be blocked by the operator prior to striking the wall **32'**. However, if the wall **32'** were sloped outward to a greater degree than depicted, unblocked light rays emanating from windows and from overhead light sources would be reflected off of the surface of the front wall **32'** back into the eyes of the operator creating undesirable glare.

Movement of the front wall **32** in the opposite direction as depicted by the front wall **32''** causes light rays **105** which are incident on the surface of the wall **32''** to be reflected back along the operator's line of vision. Since such light rays would have to emanate from within the machine, the chances of such light rays producing glare to the operator are negligible. However, such inward movement of the front wall **32** reduces the operator's viewing window through which the print point **95** and the lines of print immediately above it are observed. This could in turn be somewhat alleviated by increasing the height of the front wall **32** with a resulting increase in size of the acoustical cover **19**.

It has been found that for a preferred embodiment wherein the front wall **32** has a height of 2 inches above the top surface **100** of the typewriter **11**, the front wall may be angled as depicted by front wall **32'** by approximately 20° with respect to an imaginary plane which is perpendicular to the horizontal surface **100** without

incurring an appreciable amount of undesirable reflection or glare. The front wall as depicted by front wall **32''** may also be angled approximately 20° with respect to the perpendicular plane without incurring an appreciable reduction of the operator's viewing window. This assumes an environment wherein the light source is either above the typewriter (e.g. ceiling lighting) or horizontal (e.g. windows in sidewalls as found in a typical business office. Thus, in a typical office environment, the front wall should be substantially vertical.

As has been described, the wall **45** is angled to approximate the typical operator's line of vision to the top of the wall **32** as depicted by light ray **97**. In a preferred embodiment, this angle has been found to be approximately 35° with respect to the horizontal when the height of the front wall **32** above the surface **100** of typewriter is approximately 2 inches. This angle increases if the height of the front wall is increased. The wall **47** forms a 102° angle with respect to the wall **45** and is approximately parallel to the paper **15** as it is emitted from the acoustical cover **19**. In this manner, the paper is located directly under the wall **47** for ready visibility through the translucent but yet diffused surface of the wall **47**.

The wall **107** makes approximately a 35° angle with respect to horizontal so as to direct any acoustical noise emitting from the paper slots formed therein upward and toward the rear of the machine. The junction of the walls **47** and **107** is approximately 1.4 inches above the uppermost surface **100** of the typewriter in the preferred embodiment.

SOUND CHARACTERISTICS OF THE ACOUSTICAL COVER

Referring once again to FIG. 4 of the drawings, it has been described how the acoustical cover **19** when placed on the typewriter **11** completes the enclosure of the area around the platen **13** of the typewriter. The only openings in the cover **19** through which sound may emit are the slots **33** and **35** through which the paper **15** passes. In order to greatly reduce the noise passing through the slots, an acoustical device **50** is located in close spaced relationship to the platen and to the slots and absorbs the sounds that would otherwise emanate therethrough.

The acoustic device **50** can be a large open cavity or an acoustic filter. The preferred embodiment of the acoustic device **50** is an acoustic filter depicted in FIG. 4 of the drawings. In this embodiment, the acoustic device **50** is formed by two bent-sheet metal walls **111** and **113** which, together with two end pieces (not shown), form a large cavity **115**. The end pieces (not shown) are of the same cross-sectional shape as the cavity **115** and are fixedly secured to the end wall **51** (FIG. 2) and the opposite end wall (not shown) of the acoustical cover **19** by mounting screws **49** (FIG. 2) and a set mounting screws (not shown). In the preferred embodiment, the acoustic device is 15.4 inches long, approximately the length of the platen **13** and the cross-sectional area of the cavity **115** is approximately 0.8 inch by 1.9 inches or approximately 1.5 square inches.

The cavity **115** is filled with four strips of ¼ inch thick open cell polyurethane foam material **117, 118, 119,** and **120**. Any form of sound absorbing material which has good high frequency absorption characteristics such as fiberous glass or open cell sponge rubber could also be utilized in lieu of the polyurethane foam in order to absorb and dissipate sound. The strips of polyurethane foam material **117** and **120** have a plurality of 0.44 inch diameter holes **122** located therein as depicted in FIG. 7. The holes are located on horizontal centers .625 inch apart and on vertical centers .56 inch apart. The percent of open area of the foam is approximately 48% of the total surface area of foam strip which extends almost the length of the acoustic device **50** or approximately 14.4 inches in the preferred embodiment. The polyurethane foam material members **118** and **119** are separated from

one another by a strip **123** made of a polyethylene terephthalate such as Mylar which is coated with pressure sensitive adhesive on either side. The strip **123** runs the entire length of the acoustic device and thus creates two acoustic cavities **125** and **126** within the cavity **115**, the acoustic cavity **125** being located adjacent the slot **35**.

The two bent sheet metal members **111** and **113** each have a grill-like opening member **128** and **129** located therein, each of the grill-like opening members being contiguous to the slots **35** and **33** respectively, and each running for approximately the entire length of the slot or approximately 14.4 inches in the preferred embodiment. The openings are formed by eleven horizontal rows of staggered .077 inch diameter holes placed horizontally 7/64 of an inch from one another and vertically 3/32 of an inch from one another yielding an open area of approximately 45% of the total area of the grill-like opening members. Each of the grill-like opening members are approximately 1.02 inches wide.

In order to determine the effective frequency range of an acoustic slot filter, it is necessary to make various calculations which are based on the dimensions of the filter and associated mass. Thus, in the discussion which follows, reference will be made to an acoustical compliance and to an acoustical mass there being an acoustical compliance and an acoustical mass associted with each of the slots **33** and **35**. With reference to the slot **35**, the acoustical compliance consists of the cavity **126** and that portion of the slot **35** adjacent to the grill-like opening member **128**. The acoustical mass is the air mass located in that portion of the slot located above the radius **71** of the wall **47** which is not adjacent to the grill-like opening member **128**. Thus, the acoustical mass is located in a lower portion of the slot **35** located above the radius **71** and below the grill-like opening member **128** and in an upper portion of the slot **35** located above the grill-like opening member and below the outer edge of the slot **35**.

The most basic form of a low pass acoustical slot filter is shown in FIG. 8. The acoustic masses (M_A) represents the mass of air in the open slot which is accelerated by a net force that acts to displace the gas (air) without compressing it. The acoustic compliance (C_A) is associated with a volume of air that is compressed with a net force without acceleration. The cut-off frequency of the slot filter is inversely proportional to the acoustic mass and acoustic compliance. The acoustic mass of a narrow slot is given by the equation

$$M_A=\frac{6\rho_0 l}{5wt}$$

where:

l=length of slot in which the sound wave is travelling,
w=width of the slot as viewed from the direction from which the sound wave is coming,
t=thickness of the slot
ρ_0=density of air which is equal to 1.19 kg./m.^{3}

For the preferred embodiment of the acoustic device **50** of FIG. 4

l=0.25 in.
t=0.078 in.
w=14.4 in.

Hence, M_A=12.5 kg./m.^{4}. The equivalent mass of the acoustic device is equal to $2M_A$ representing the mass on either side of the acoustic compliance which is equal to 25 kg./m.^{4} in the preferred embodiment.

The acoustic compliance of an enclosed volume of air V with an opening for entrance of pressure variations is given by the following equation:

$$C_A=\frac{V}{\rho_0 c^2}$$

V=volume of air
ρ_0=density of air
c =speed of sound=344.8 m./sec.

For the acoustic device depicted in FIG. 4,

$V=(14.4 \text{ in.})\ (0.4 \text{ in.})\ (1.9 \text{ in.})$
$=(1.79)\ (10^{-4})\ (\text{m.}^3)$

Hence,

$$C_A=\frac{V}{\rho_0 C^2}=(1.263)(10^{-9})=\frac{m.^5}{\text{newton}}$$

The cut-off frequency of the filter is given by the following equation:

$$f_c=\frac{1}{\pi\sqrt{M_{A_{EQ}}C_A}}$$

For the acoustic device depicted in FIG. 4,

$$f_c=1790 \text{ c.p.s.}$$

The above computation shows that the acoustic device acts as a filter which effectively eliminates sounds emitting through the slots **33** and **35** of FIG. 4 which have a frequency greater than 1790 c.p.s.

Referring once again to FIG. 4 of the drawings, it has been described that an alternate acoustic device **50** in the form of a large open chamber could be utilized instead of the acoustic filter depicted. Such a device could be shaped in the identical shape of the acoustic filter depicted with the lower-most surface **131** of the sheet metal wall **113** removed therefrom thereby creating an inverted U-shaped cavity. Additionally, the grill-like opening members **128** and **129** would be replaced by solid walls and the inside surfaces of the thus formed inverted U-shaped member can be lined with ¼ inch thick sound absorbent material thereby creating a large sound absorbing surface directly over the platen area and located immediately adjacent to the slots **35** and **33** through which the paper emanates. Such a device appreciably reduces emanated sounds of frequencies above 1,000 c.p.s.

Referring now to FIG. 9 of the drawings, a frequency plot showing the sound level emitted from a typical typewriter compared with a typewriter having the acoustical cover of the present invention incorporating the acoustic device 50 depicted in FIG. 4 and compared with a typewriter having the acoustical cover of the present invention incorporating an inverted U-shaped acoustic device as heretofore described is depicted. The sound was measured by a microphone placed parallel to the paper path and one foot above the top of the acoustical device. The ordinate of the frequency plot represents the RMS sound pressure level as measured within each octave pass band denoted on the upper abscissa scale. The lower abscissa scale denotes the center frequencies of the octave pass bands.

The curve **138** is that of a typical typewriter operating without any acoustical cover over the platen area, the curve **139** is that of the same typewriter operating with the acoustical cover of the present invention having an inverted U-shaped acoustic device and the curve **140** is that of the same typewriter operating with the acoustical cover of the present invention having an acoustic filter type acoustic device. As can be seen, the acoustical cover incorporating either acoustic device effects a 3 db sound reduction in the 710 to 1400 cycle per second pass band and an 11 db reduction in the 1400 to 2800 cycle per second pass band as compared with the typical typewriter.

As has been described, the cut-off frequency of the acoustic filter in the preferred embodiment is 1790 cycles per second. Thus the curve **140** is appreciably below the curve **139** in the frequency bands above 1790 c.p.s. representing the sound diminuation effected by the filter. However, it should be noted that the acoustical cover of the present invention effects a substantial noise reduction in the frequency bands above 1790 c.p.s. when either acoustic device is incorporated therein.

While the above discussion has related to an acoustical cover for the platen area of a typewriter or the like machine, it is understood by those skilled in the art that noise which emits from other locations of typical typewriters should also be minimized in order for there to be a substantial reduction in the noise generated by such a machine. For example, the keyboard opening and slots such as the margin lever slots could be sealed by utilizing respectively, a flexible membrane fitted over the keystems and a closed cell foam material fitted within the slot areas. Additionally, the interior walls of the machine could be lined with sound absorbent material where possible, and the machine could be shock mounted on its base in accord with conventional and well-known practices.

A further modification which could readily be made to the acoustical cover of the present invention would be to mount the end walls thereof on the typewriter housing. Thereafter, the remaining portion of the cover could be placed on the machine to form an integral container over the platen area as has been described.

While the invention has been particularly shown and described with reference to the preferred embodiment thereof, it should be understood by those skilled in the art that the foregoing and other changes in form and detail may be made therein without departing from the scope of the invention.

What is claimed is:

1. An acoustical cover for an office machine of the type having a housing for enclosing the machine operating elements and an opening for accommodating paper access, said cover being configured to enclose said opening and comprising:

a first substantially vertical transparent window wall;
a second wall connected to the upper portion of first wall and sloping downward therefrom;
a third wall connected to the lower portion of said second wall and sloping upward therefrom;
a pair of oppositely faced end walls connected to the side edges of said first, second, and third walls;
an acoustic device having one surface thereof substantially parallel to said third wall and forming an unobstructed paper feeding slot therewith through the enclosure formed by said cover, said acoustic device defining at least one acoustic cavity located in close proximity to the paper feeding slot for reducing the noise that would otherwise emanate from the paper feeding slot.

2. The acoustic cover set forth in claim **1**, wherein said first and said second walls are pivotally connected with respect to said acoustic device.

3. The acoustical cover set forth in claim **1** wherein said second and third walls are constructed of a translucent light diffusing material.

4. The acoustical cover set forth in claim **1** wherein said acoustic device comprises an acoustic slot filter having an opening between said slot and said cavity whereby said cavity forms an acoustic compliance with the acoustic air mass within said slot, said acoustic slot filter acoustically filtering audible sounds that would otherwise emanate from the slot.

5. The acoustical cover set forth in claim **1** wherein said acoustic device comprises an inverted U-shaped member which forms said cavity, one wall of said member providing said substantially parallel surface, the opening in said inverted U-shaped member being oriented directly above the machine operating elements and adjacent to the paper feeding slot created by said surface.

6. The acoustical cover set forth in claim **1** further comprising:

a fourth wall substantially perpendicular to the pair of end walls and forming a second unobstructed paper feeding slot with a second surface of said acoustic device.

7. The acoustical cover set forth in claim **6** wherein said acoustic device comprises two acoustic slot filters each having an acoustic cavity associated therewith and each being associated with one of said slots, each of said slot filters having an opening between its corresponding slot and cavity whereby each of said cavities forms an

acoustic compliance with the acoustic air mass in its corresponding slot, each of said acoustic slot filters acoustically filtering audible sounds that would otherwise emanate from its associated slot.

8. An acoustical cover for an office machine of the type having a housing for enclosing the machine's operating elements and opening for accommodating paper access, said acoustical cover comprising:

a hood configured to enclose said opening and having at least one unobstructed paper slot located therein;

an acoustic slot filter having at least one elongated unobstructed paper passageway having openings at opposed ends to facilitate the feeding of paper from said paper slot to the machine operating elements, said filter further comprising at least one acoustic cavity forming an acoustic compliance with the acoustic air mass in said passageway for filtering audible sounds over a wide frequency range that would otherwise emanate from the paper slot.

9. The acoustical cover set forth in claim **8** wherein said hood forms an integral portion of said elongated passageway.

References Cited

UNITED STATES PATENTS

2,517,147 8/1950 Vee.

FOREIGN PATENTS

492,502 9/1938 Great Britain.

OTHER REFERENCES

Acustica (periodical) vol. 12, No. 3, 1962, pp. 139–152, "The Performance of Acoustic Hoods at Low Frequencies," by R. S. Jackson, copy in Patent Office scientific library.

ROBERT S. WARD, Jr., Primary Examiner

U.S. Cl. X.R.

178—42; 181—48