United States Patent

Newton et al.

[15] **3,677,081**

[45] **July 18, 1972**

[54] SIDEWALL WELL-FORMATION FLUID SAMPLER

[72] Inventors: **George R. Newton; Alfred H. Jageler,** both of Tulsa, Okla.

[73] Assignee: **Amoco Production Company,** Tulsa, Okla.

[22] Filed: **June 16, 1971**

[21] Appl. No.: **153,633**

[52] **U.S. Cl.** **73/155,** 166/100

[51] **Int. Cl.** **E21b 49/00**

[58] **Field of Search** 73/155, 152; 166/264, 100

[56] **References Cited**

UNITED STATES PATENTS

2,563,284	8/1951	Seay, Jr.	73/155 UX
3,294,170	12/1966	Warren et al.	166/264 X

Primary Examiner—Jerry W. Myracle

Attorney—Paul F. Hawley et al.

[57] **ABSTRACT**

A sidewall tool run on a well logging cable to obtain well-formation fluid samples incorporates a pump that is operated by reciprocating the suspending cable until a satisfactorily contamination-free sample is assured. The conductors of the cable are used both for controlling the various functions of the tool and for telemetering pressure and fluid-character data to the ground surface for recording and/or for monitoring the sampling operation. As the pump suction is the primary agent for inducing sample flow from the formation and is thus completely controllable by manipulation of the logging cable, conventional means such as chokes, water cushions, and the like, for regulating the sample flow rate are unnecessary. Chances of the tool becoming differentially stuck are minimized, as it is approximately centralized in the well bore by the retractable anchoring shoes and packer pad, and the latter can readily be broken free from its backing plate and left behind if necessary.

5 Claims, 12 Drawing Figures

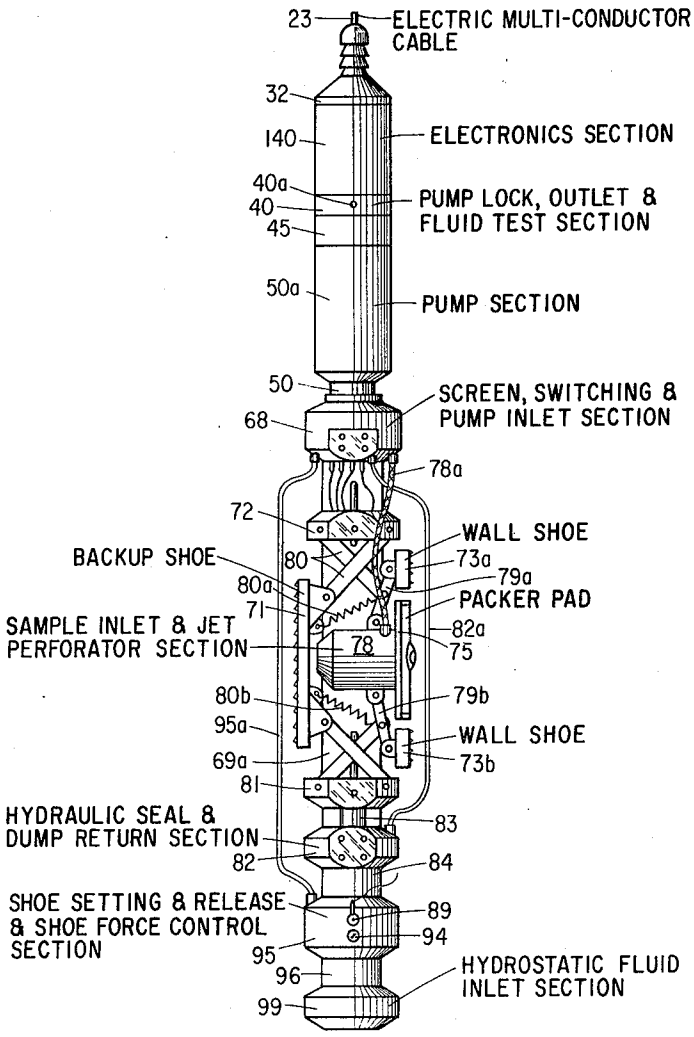

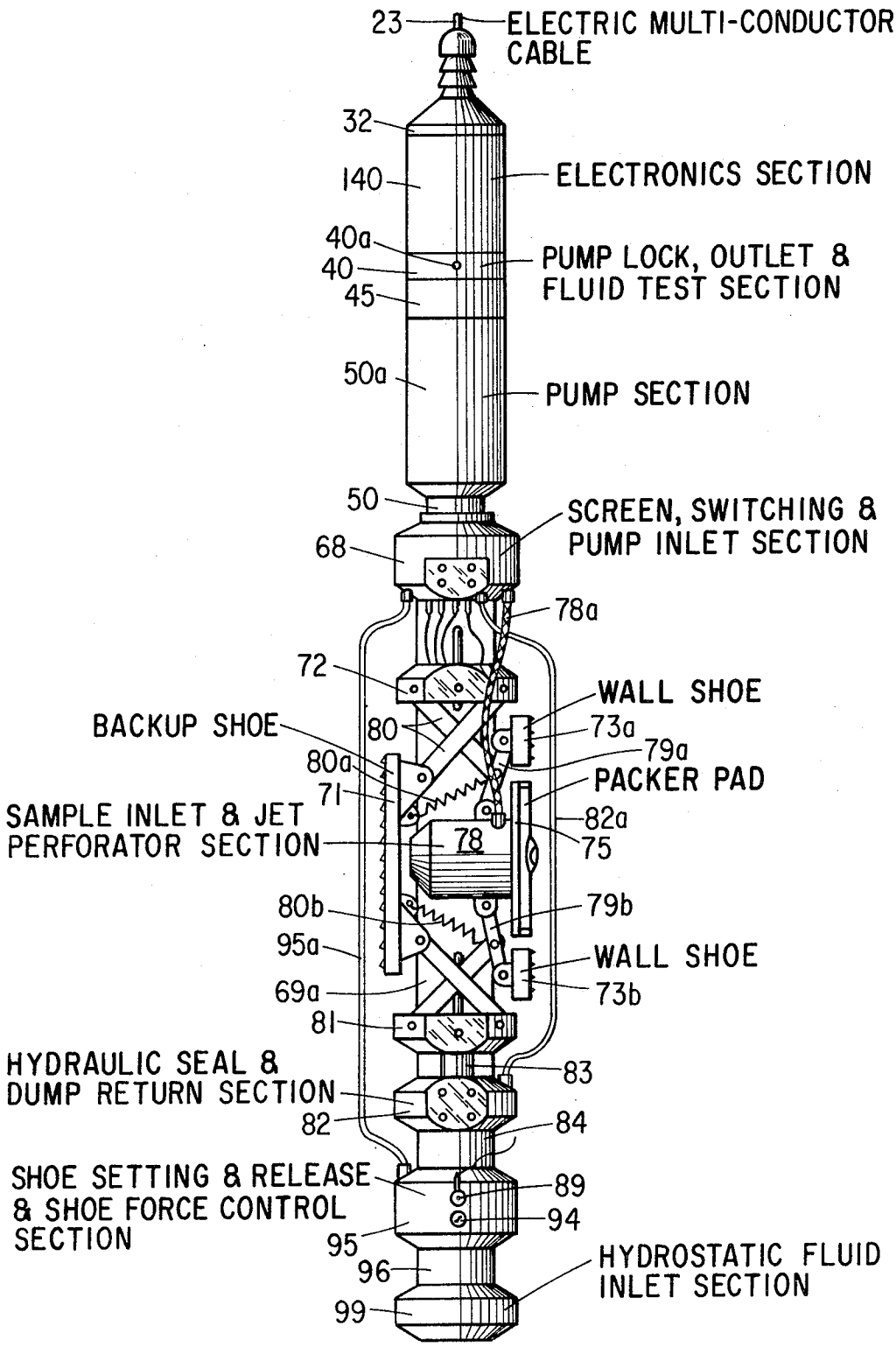
23
ELECTRIC MULTI-CONDUCTOR CABLE
32
140
ELECTRONICS SECTION
40a
40
45
PUMP LOCK, OUTLET & FLUID TEST SECTION
50a
PUMP SECTION
50
SCREEN, SWITCHING & PUMP INLET SECTION
68
78a
72
WALL SHOE
BACKUP SHOE
80
73a
79a
80a
PACKER PAD
71
82a
SAMPLE INLET & JET PERFORATOR SECTION
78
75
80b
79b
95a
WALL SHOE
73b
69a
81
HYDRAULIC SEAL & DUMP RETURN SECTION
83
82
84
SHOE SETTING & RELEASE & SHOE FORCE CONTROL SECTION
89
94
95
96
HYDROSTATIC FLUID INLET SECTION
99

FIG.1

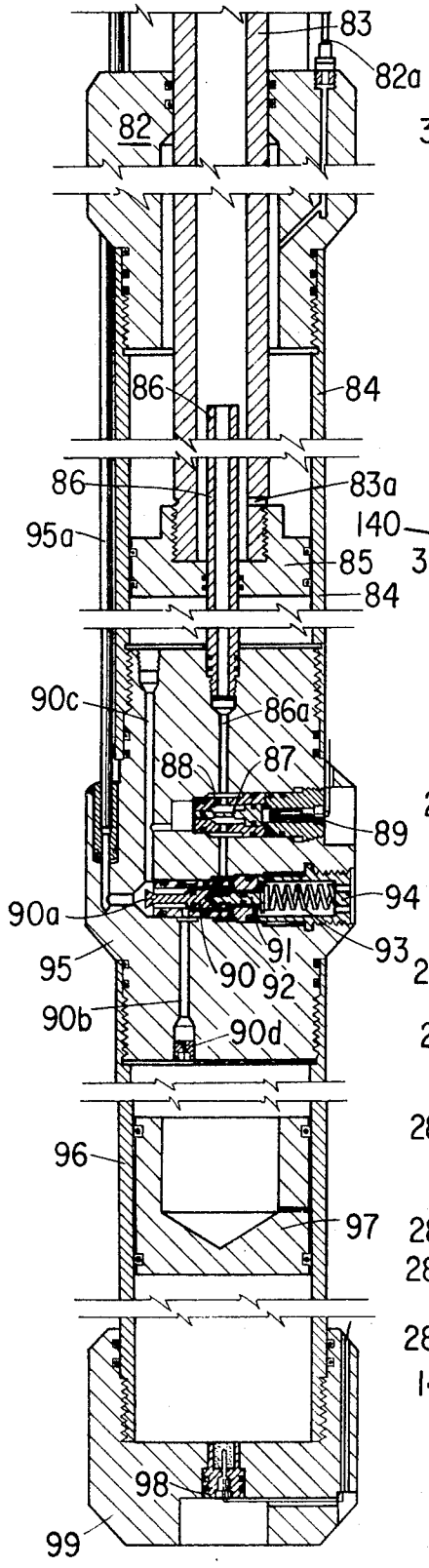

FIG. 6

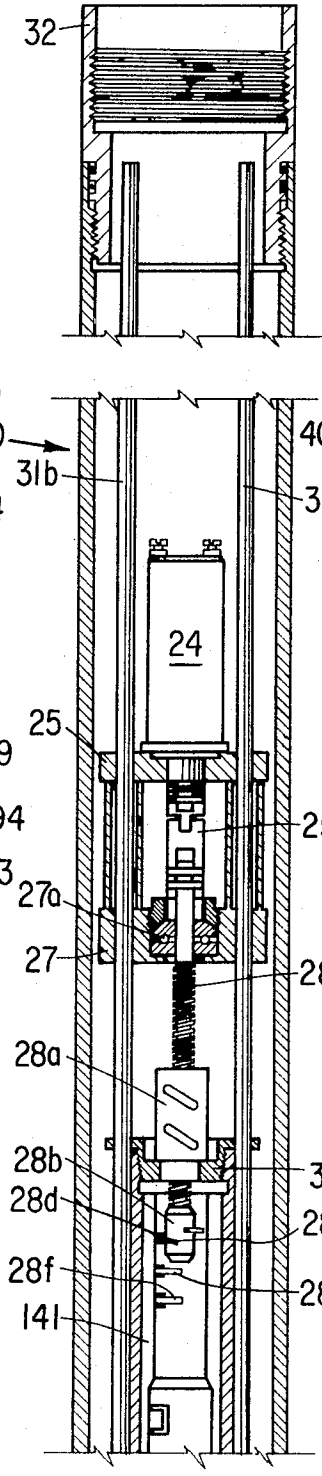

FIG. 2

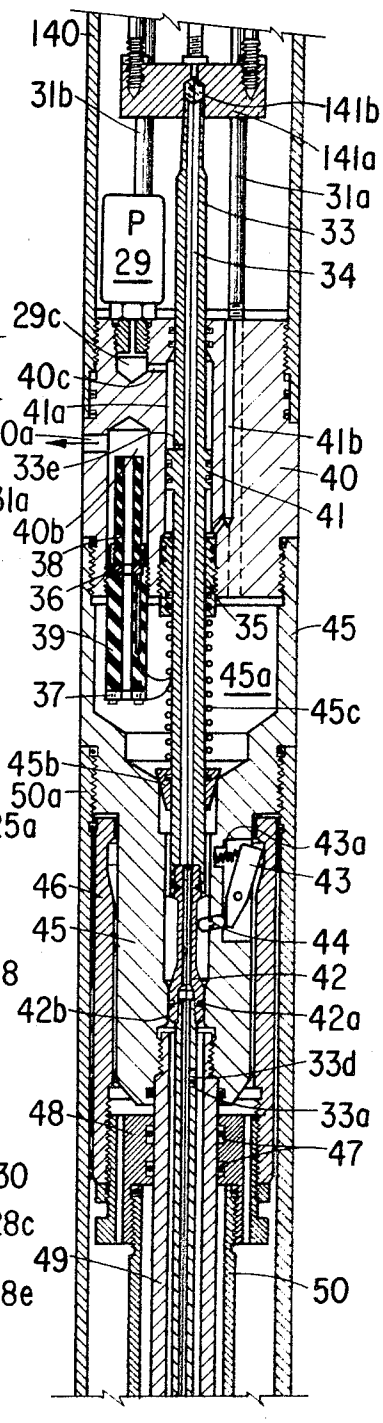

FIG. 3

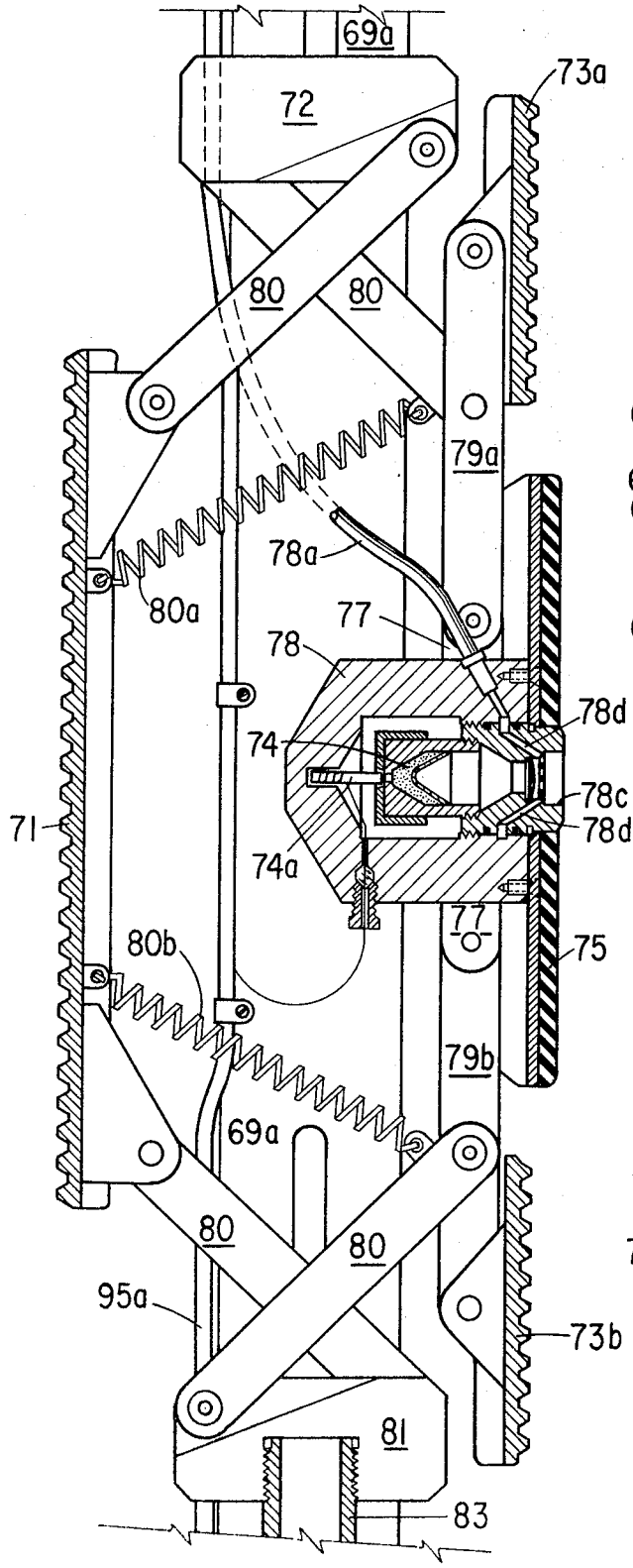
69a
72
73a
80
80
79a
78a
80a
77
78
78d
74
78c
78d
71
74a
77
75
80b
79b
69a
80
80
95a
73b
81
83

FIG. 5

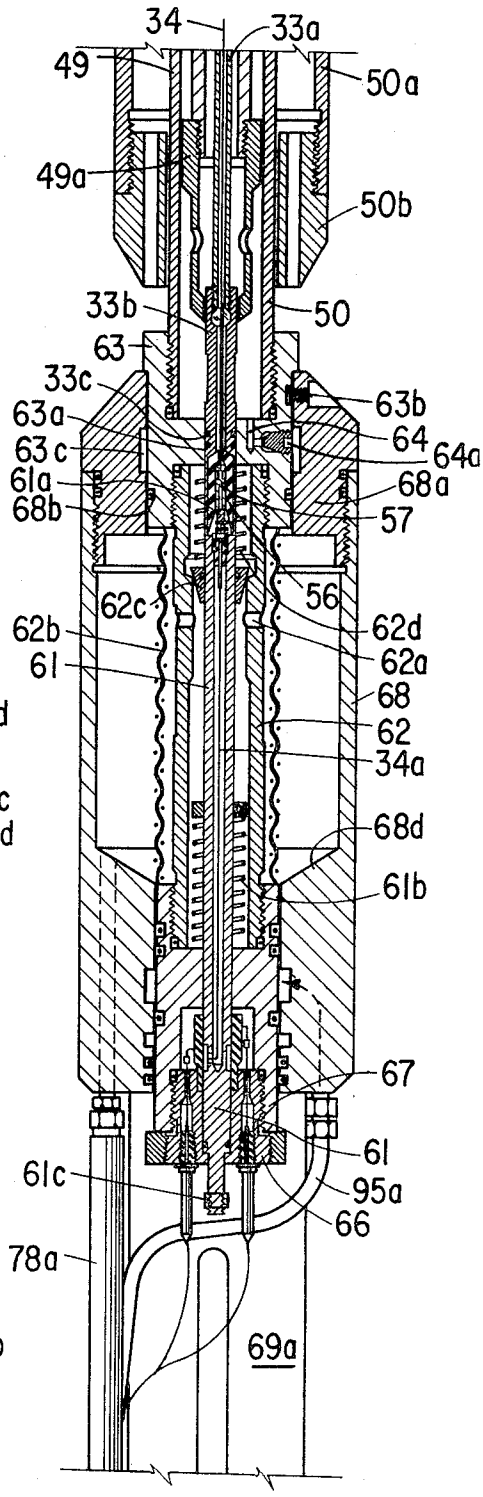
34
33a
49
50a
49a
50b
33b
50
63
33c
63b
63a
64
63c
64a
61a
68a
68b
57
62c
56
62b
62d
61
62a
68
62
34a
68d
61b
67
61
61c
95a
66
78a
69a

FIG. 4

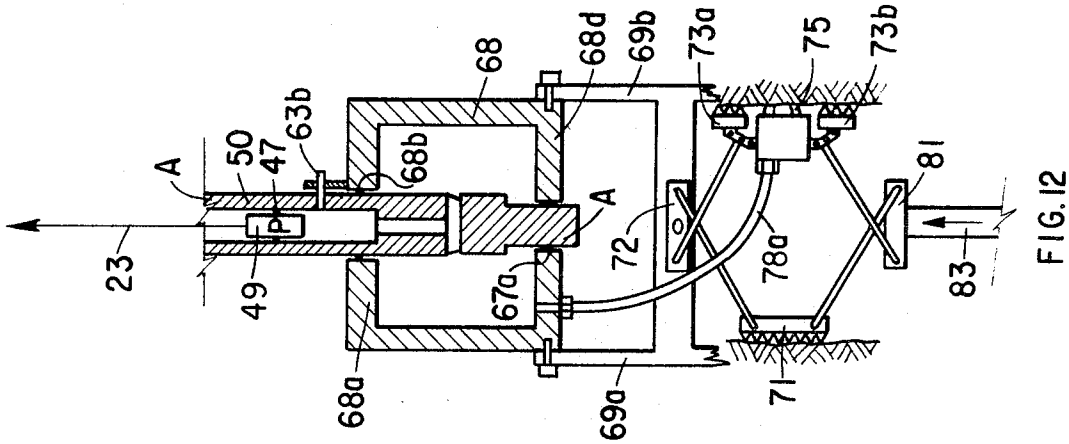
23
A
50
47
63b
49
68
68b
68d
69b
73a
75
73b
A
72
67a
68a
69a
78a
71
81
83

FIG. 12

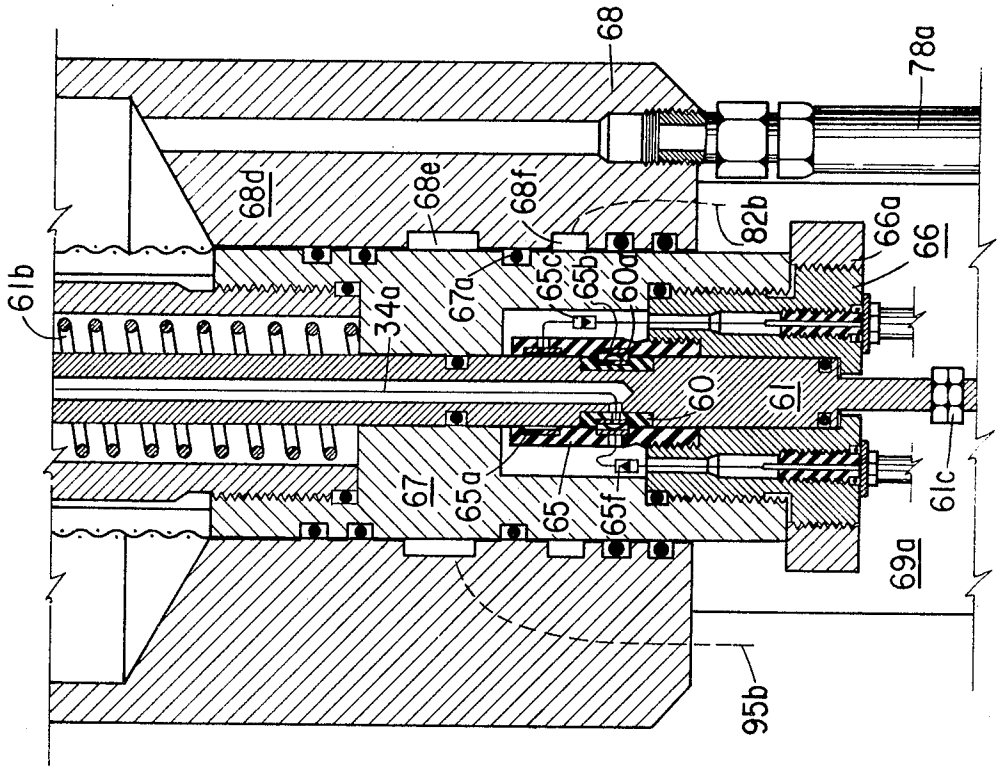
61b
68d
68e
68f
68
78a
82b
66a
66
34a
67a
65c
65b
60a
60
61
67
65a
65
65f
61c
69a
95b

FIG. 7

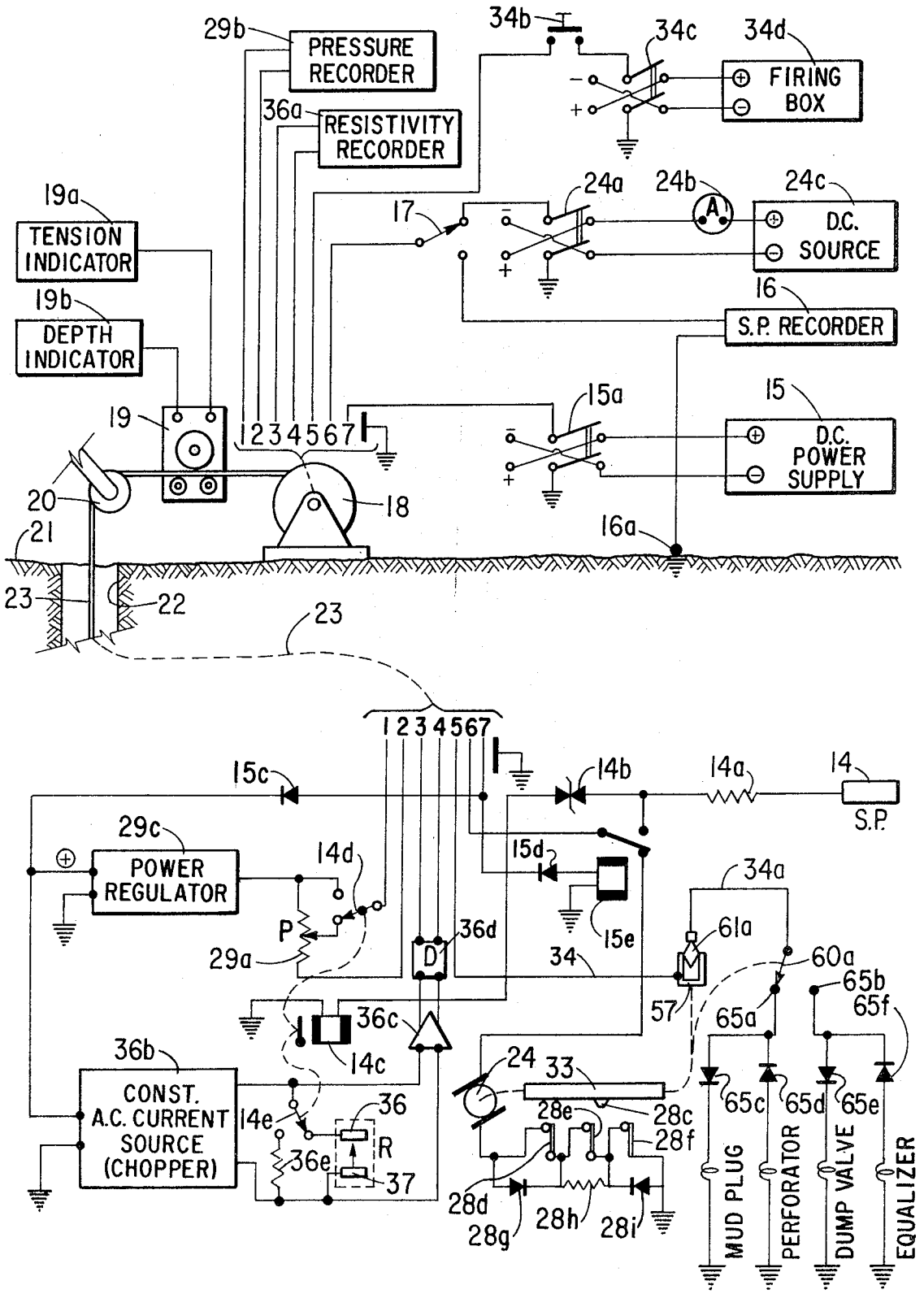
29b
PRESSURE RECORDER
36a
RESISTIVITY RECORDER
34b
34c
34d
FIRING BOX
19a
TENSION INDICATOR
19b
DEPTH INDICATOR
17
24a
24b
24c
D.C. SOURCE
16
S.P. RECORDER
19
1 2 3 4 5 6 7
15a
15
D.C. POWER SUPPLY
20
21
18
16a
23
22
23
1 2 3 4 5 6 7
15c
14b
14a
14
S.P.
29c
POWER REGULATOR
14d
15d
34a
P
29a
D
36d
15e
61a
34
60a
65b
65f
57
65a
36c
14c
36b
CONST. A.C. CURRENT SOURCE (CHOPPER)
14e
36
R
36e
37
24
33
28e
28c
28f
65c
65d
65e
28d
28g
28h
28i
MUD PLUG
PERFORATOR
DUMP VALVE
EQUALIZER

FIG. 8

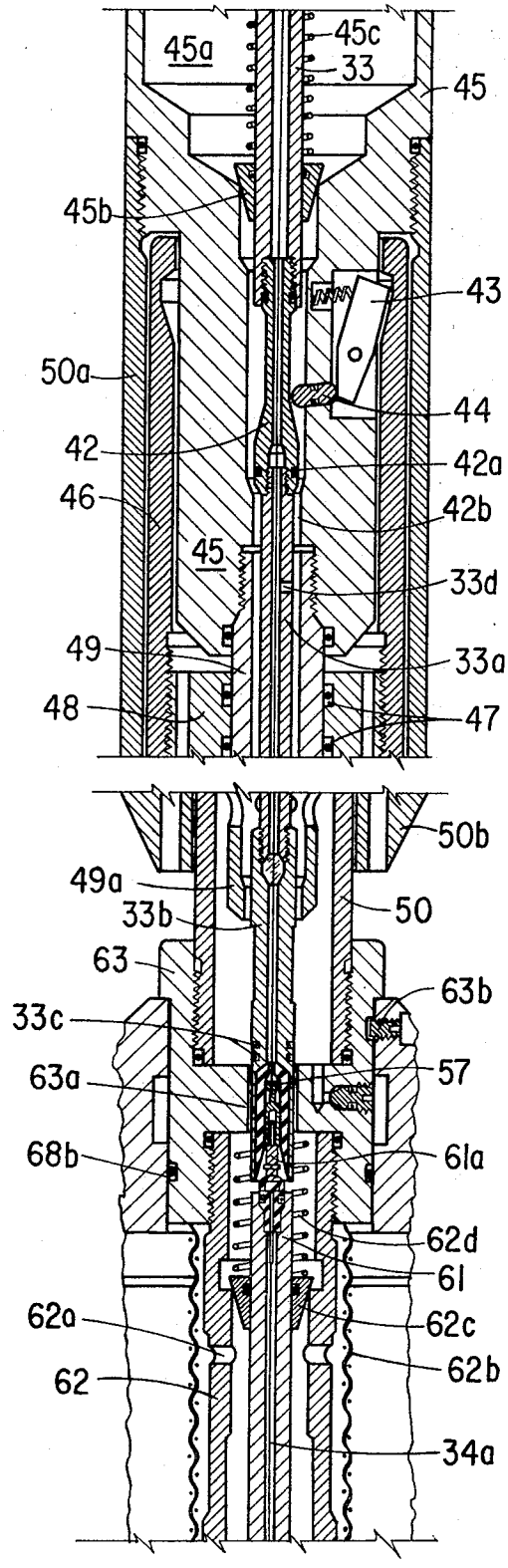
45a
45c
33
45
45b
43
50a
44
42
42a
46
42b
45
33d
49
33a
48
47
50b
49a
33b
50
63
63b
33c
57
63a
61a
68b
62d
61
62a
62c
62b
62
34a

FIG. 9

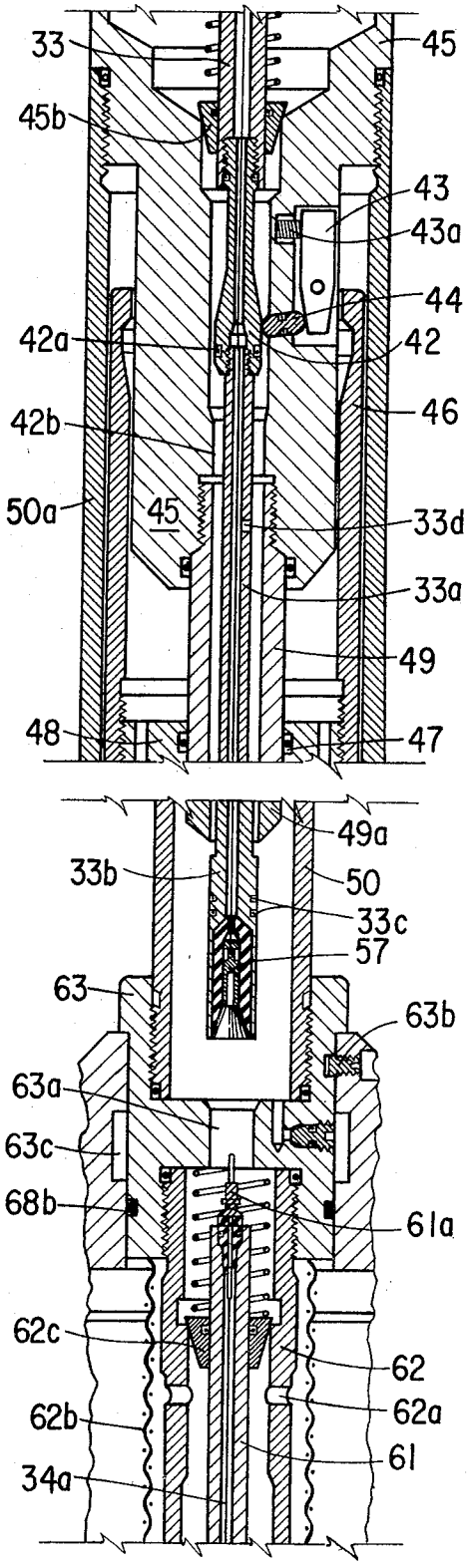
33
45
45b
43
43a
44
42a
42
42b
46
50a
45
33d
33a
49
48
47
49a
33b
50
33c
57
63
63b
63a
63c
68b
61a
62c
62
62b
62a
34a
61

FIG. 10

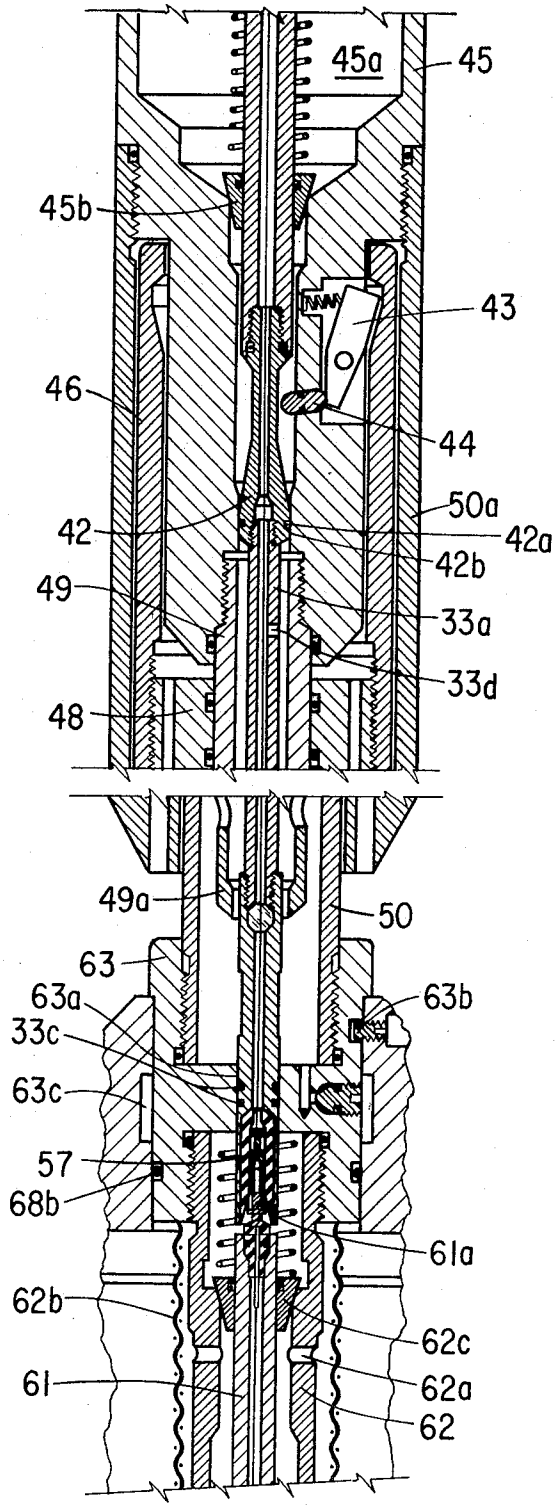
45a
45
45b
43
46
44
50a
42
42a
42b
49
33a
33d
48
49a
50
63
63a
63b
33c
63c
57
68b
61a
62b
62c
61
62a
62

FIG. 11

SIDEWALL WELL-FORMATION FLUID SAMPLER

BACKGROUND OF THE INVENTION

1. Field of the Invention

This invention relates to formation fluid sampling and is directed to an improved formation-fluid sampler of the type that is lowered into a well on a wire line or logging cable, with pack-off means surrounding a sample inlet that is pressed against the well wall at the precise desired sampling depth. More specifically, the invention is directed to a side-wall well-formation fluid sampler with improved capabilities for obtaining contamination-free samples as compared with the commercially available samplers in the prior art.

2. Description of the Prior Art

Formation fluid testing falls generally into two categories: productivity testing and side-wall fluid sampling. In productivity testing, flow is induced into a tubing or drill pipe string in a well from more or less extensive vertical intervals of the well or from an entire pay formation, ordinarily with segregation of the test interval from the remainder of the well bore. In side-wall fluid sampling with a cable or wire-line tool, as exemplified by the present invention and by such prior-art U.S. Pat. Nos. as 2,674,313 Chambers, 2,982,130 McMahan, or 3,011,554 Desbrands, Fields, the formation fluids at essentially only a single depth point are sampled by a small-area sampling inlet pressed against the well wall and surrounded by pack-off means, such as an elastic ring. The volume of sample that can be obtained is limited due to limitations on the size and weight of tool that can be supported by the cable, which is ordinarily a logging cable having one or several insulated electrical conductors. As porous, liquid-containing formations are almost always invaded by drilling fluid filtrate to a greater or less degree, this filtrate represents contamination which is not only undesirable but for some purposes is intolerable.

Attempts to overcome or avoid this problem have involved, for example, surface monitoring of a fluid property such as resistivity while the sample is flowing to the receiving chamber, and filling multiple receiving chambers in sequence, the last filled presumably being most nearly contamination-free. It is generally recognized that the rate at which the sample is withdrawn must be so controlled as not to break the pack-off seal or to disrupt the formation. For example, to suddenly subject a small area of well wall, typically under several hundred or thousand pounds of liquid hydrostatic pressure, to the virtual vacuum of an empty sample chamber by opening a valve thereto could place such a great pressure differential across the packer and into the formation face as to cause packer leakage, bypassing of the packer seal by the well-bore fluids, or possibly breakdown of the formation material due to the large internal fluid pressure that is suddenly unbalanced. Somewhat elaborate expedients have been devised to regulate the sample flow rate, such as the use of water cushions filling the sample chamber, small orifices to prevent rapid flow, and the like.

One somewhat promising proposal that, so far as is known never became commercially available, is that shown in U.S. Pat. No. 2,511,759 Williams. There, a downhole electric motor drives a pump to draw fluids from the formation and eject them through a sample chamber into the well bore, while monitoring the fluid resistivity. Theoretically, sampling could thus be continued for an indefinitely long time, which could be as long as necessary to eliminate invasion fluid contamination from the retained sample. In practice, the sampler of Williams is faced with a number of problems, probably the greatest of which is avoided by the present invention: the amount of electrical power that can be practically transmitted over the conductors of commercial logging cables is severely limited by the conductor size and insulation. These are ordinarily designed for signal transmission involving negligible amounts of electrical power, and thus Williams could be faced with inordinately long sampling times for lack of sufficient pumping capacity. Furthermore, Williams can only indirectly ascertain the functioning of his pump by the changes noted in the fluid resistivity indication.

While contamination-free formation fluid samples are always desirable for analytical uses, they are practically essential for meaningful results when a geochemical prospecting method like that of U.S. Pat. No. 3,524,346 Schmidt is being used. There, measurements of the salinity and aromatic hydrocarbon content of well formation waters are interpreted in terms of proximity to hydrocarbon deposits that are missing from but may be located near the well being sampled. Although the present invention was initially directed to providing contamination-free water samples for use in accordance with the Schmidt prospecting method, it will be apparent that such samples, whether of water or of other fluids present in subsurface formations, are superior for all analytical uses. Accordingly, it may be considered as a primary object of the present invention to provide an improved side-wall formation-fluid sampler employing sample-pumping means at all times under direct control and monitoring from the ground surface, without the need for large-scale electric power transmission to the subsurface for pump operation.

SUMMARY OF THE INVENTION

This and other objects are accomplished in the present invention, by incorporating in the subsurface sampling unit a reciprocating pump which is stroked by raising and lowering the suspending cable. Included also are means controlled from the ground surface for locking and unlocking the pump piston, respectively to prevent or to allow pumping. At the conclusion of pumping, seals can be established near the inlet and outlet of the pump so that the space within the pump serves as the sample holder. To avoid sudden pressure differentials, the sampler can be preloaded with a liquid, preferably fresh water, and the tool opened to hydrostatic pressure. The preload liquid will be ejected into the well bore as soon as the pump withdraws liquid from the formation under test. The pressure differential across the test zone is completely controllable by the pumping rate and the length of the pump stroke. One or more fluid properties such as resistivity, temperature, and the like, are monitored over conductors of the cable; and the action of the pump as well as the response of the formation under test to the pump suction are indicated at the ground surface from an electrical pressure transducer in communication with the interior of the pump barrel.

For the electrical control of tool functions in the lower portion of the tool, an insulated electrical lead passes along the axis of the pump, and electrical contact means engageable with the pump in locked position provide continuity for the electrical circuit elements therebelow. Specifically, a hollow cylindrical rod enclosing an insulated electrical conductor and providing pressure communication to the interior of the pump extends through the pump along its longitudinal axis. A reversible electric motor actuated and controlled from the ground surface shifts the rod longitudinally to various positions, respectively to accomplish locking or unlocking of the pump mechanism, opening or sealing of the pump as a sample container, and electrical switching of the enclosed insulated lead to each of a plurality of explosive electrical igniters in the bottom portion of the tool and controlling various tool functions. Alternate electrical and mechanical procedures for releasing the tool from wall engagement are provided, including pressure-balancing of certain mechanical elements to prevent adverse effects from the hydrostatic or the pump-suction pressure acting thereon.

BRIEF DESCRIPTION OF THE DRAWINGS

This will be better understood by reference to the accompanying drawings forming a part of this application. In these drawings,

FIG. 1 is a schematic elevation view of the general form and arrangement of the invention;

FIGS. 2 through 6 respectively correspond to cross-section views of a prototype model of the invention taken from the top down;

FIG. 7 is a detailed cross-sectional view of the switching section;

FIG. 8 is a schematic wiring diagram;

FIGS. 9, 10 and 11 are detailed cross-section views of parts of the tool in different positions during different portions of the sampling operation; and

FIG. 12 is a simplified diagrammatic drawing of a portion of the tool illustrating one mode of its operation.

DETAILED DESCRIPTION OF THE DRAWINGS

Referring now to the drawings and in particular to FIG. 1, this figure shows schematically in elevation the form and arrangement of the major components of the downhole sampling tool. Beginning at the top of the figure, the multi-conductor cable **23** enters a cable head **32** of conventional form to which the cable is fastened and in which the separate conductor leads are brought out for connection to the electrical circuits in the components below. In turn, these are an electronics housing **140** containing most of the electrical circuit components at atmospheric pressure or thereabouts, and a testing sub **40** sealing the bottom of housing **140** against hydrostatic pressure present therebelow and containing fluid-testing elements besides the flow outlet **40***a*. Coupled to sub **40** is a pump-locking section **45**, below which is the main pump section within an outer protective sleeve **50***a* slidable with the upper portion of the tool over the pump barrel which is fixed to a pump inlet sub **68**. Sub **68** contains not only the pump inlet, but also electrical connection and switching means for establishing an electrical circuit to the parts of the tool therebelow, and a screen for preventing solids in the sample from entering the pump inlet.

Between inlet sub **68** and a hydraulic shoe-setting power sub **82**, the tool is generally open to hydrostatic pressure, only one of two parallel support bars **69***a* being shown in FIG. **1**, it being assumed that the other **69***b* has been removed to show the arrangement of the sampling head and anchoring shoes. In general, the shoe and sample head-setting mechanism somewhat resembles a scissors jack, an upper jack head **72** being held fixed with respect to the support bar **69***a* and its companion which has been removed, by shear-pin means, not shown. A lower movable jack head **81** attached to a power piston rod **83** rising up from the power sub **82** is movable upwardly relative to the fixed head **72** to actuate two pairs of pivoted scissors arms **80**. Pivoted to the outer ends of two of arms **80** is a wall-contacting backup shoe **71**, while the other two of arms **80**, through a pair of pivoted levers **79***a* and **79***b*, move anchor shoes **73***a*, **73***b*, and sampling head **78** together radially to or from a well wall in the opposite direction to shoe **71**, as head **81** moves up or down relative to fixed head **72**. When the shoes are set against a well formation, resilient pad **75** on sampling head **78** facing the well wall provides a seal around the sample inlet. Tension springs **80***a* and **80***b* assist in retracting the shoes and sampling head when a sampling operation is completed. A flexible pressure hose **78***a* is connected between sample head **78** and sub **68** to carry produced formation fluids to the pump inlet in sub **68**.

Setting force for the shoes and sampling head is provided by a piston on the bottom of rod **83** and working in power cylinder **84** supplied with hydraulic fluid power at hydrostatic pressure from a supply cylinder **96** through a setting control sub **95**. Sub **95** includes both force-controlling means exposed to well-bore pressure at an inlet **94** and an explosively actuated dump plug **89** for releasing shoe-setting hydraulic pressure into a low-pressure space within cylinder **84**. The bottom nose **99** of the tool not only closes the hydraulic fluid cylinder **96**, but also includes explosive valve means subsequently described for admitting hydrostatic well pressure into cylinder **96**. Hydraulic lines **82***a* and **95***a* respectively connect power head **82** and setting-control sub **95** to sealed spaces within sub **68**, which may be connected by mechanical tool operations to release shoe-setting hydraulic pressure in the event of an electrical malfunction preventing firing of dump plug **89**. Shown separated here for clarity, hydraulic lines **82***a* and **95***a* normally are run close to and fastened to support bar **69***a* (or **69***b*, not shown).

FIGS. 2 through 6, inclusive, show in cross-section and in greater detail the parts and arrangement of a prototype model of the tool representing the presently preferred embodiment of the invention and shown generally in FIG. 1. Electronics housing **140** encloses a reversible direct-current electric motor **24** fixed on a mounting **25** and coupled by a flexible coupling **25***a* to a ball screw **28**. The thrust of screw **28** is carried by a bearing **27***a* in a mount **27** mechanically connected to mount **25**. Extending through most of the length of housing **140** are support tubes **31***a*, **31***b*, which are attached by threads to the sub **40**. An insulated electrical conductor extends through each of tubes **31***a*, **31***b*, and through extension passages (not shown) drilled through sub **40** into the space therebelow, there being bulkhead seals, not shown, surrounding the conductors to withstand the hydrostatic pressure present below sub **40**. Tubes **31***a*, **31***b* pass through mounts **25** and **27**, and the latter are secured against movement relative thereto by means such as set screws, not shown.

Engaged by ball screw **28** is a recirculating ball nut **28***a* held against rotation by and connected to a sub **30** slidable along rods **31***a*, **31***b* and connected in turn to a chassis **141** extending to a lower cross-member **141***a*. A lower tip member **28***b* of screw **28** carries a projecting ring **28***c* of a size to make contact with actuating levers of three microswitches **28***d*, **28***e*, and **28***f* mounted on and movable with chassis **141**, these switches therefore serving to indicate three vertical positions of the chassis relative to ring **28***c* which stays at a fixed level. Cross-member **141***a* at the bottom of chassis **141** is coupled to a central rod **33** extending through and along the tool axis to a point below the pump barrel **50**. Rod **33** is hollow and encloses an insulated electrical conductor **34**, an insulating pressure seal **141***b* preventing leakage around conductor **34** through member **141***a*.

It is the primary function of the ball screw mechanism and motor **24**, the output shaft of which is geared to run at low speed and provide high torque, to move rod **33** lengthwise to any of the three positions corresponding to the three microswitches **28***d*, **28***e* and **28***f*. A pressure transducer **29** is mounted in the bottom of housing **140** on the upper face of sub **40** and is in fluid communication with the hydrostatic pressure existing within pump barrel **50** in a manner to be described below. Encircling rod **33** is an annular piston **41** within a concentric cylinder **41***a* formed in sub **40**. A seal nut **35** carrying O-rings surrounds and seals both rod **33** and cylinder **41***a* below piston **41**, a passage **41***b* extending from the space in cylinder **41**a between piston **41** and seal **35** back into housing **140**. In a second cylindrical space **40***b* formed in sub **40** parallel to and offset from axial rod **33** is an electrical resistivity cell comprising a first ring electrode **36** between tubular insulators **38** and **39** mounted in the space **40***b*, a second ring electrode **37** being mounted on the lower end of insulated spacer **39**. An insulated lead, not shown, from each of electrodes **36** and **37** extends through one of the tubular supports **31***a*, **31***b* to the circuitry in housing **140**. Space **40***b* opens through outlet **40***a* to the outside of the tool. As will be apparent, liquid passing through the central openings of electrodes **36** and **37** and the tubular insulators **38** and **39** will produce in a constant flow of electric current between the electrodes a voltage drop depending on the liquid resistivity.

The pump lock body **45** is attached by sealed threads to the bottom of sub **40** leaving a substantial open space **45***a* into which the resistivity cell projects, the bottom of space **45***a* being sealed by a conical valve member **45***b* urged downwardly by a spring **45***c*. Being slidable on rod **33** and sealed by an O-ring thereto, member **45***b* forms the upper or traveling valve of the pump. Below valve **45***b*, the central passage through body **45** narrows, and rod **33** is connected to a locking cam **42** carrying at its largest diameter an O-ring seal **42***a* which cooperates with a constriction **42***b* of body **45** to seal the annular passage around rod **33** and cam **42**. Conductor **34** extends from rod **33** through a similar passage along the axis of cam **42** and thence into a further continuation **33***a* of rod **33** downwardly through the pump plunger. Within a

recess in body 45 is a pivoted locking member 43 urged outwardly by a compression spring 43a, a lock pin or cam follower 44 extending between cam 42 and the other end of locking pawl 43 from spring 43a. While only one lock member 43 is shown, there will preferably be two or more equally spaced around the circumference of lock body 45.

The bottom end of body 45 is attached and sealed to the top end of hollow pump plunger 49, slidable through seals 47 in a sealing sub 48 attached to the outer barrel 50 of the pump. Extending upwardly from sub 48 is a lock-down sub 46 having an inside annular notch to be engaged by lock pawl 43. An outer protective sleeve 50a is threadedly attached to body 45 and extends downwardly around sub 46 to a point near the bottom of barrel 50. A perforated nose piece 50b on the bottom end of sleeve 50a acts as a guide against the outside of barrel 50. A similar guide 49a on the lower end of plunger 49 centralizes it and rod extension 33b in barrel 50.

Attached by sealed threads to the lower end of barrel 50 is a sealing sleeve 63 which extends through the central cylindrical bore of upper end member 68a of pump inlet housing 68, there being only an O-ring seal 68b to prevent fluid leakage along the mating surfaces. Immediately above seal 68b is an annular space 63c made by enlarging the bore through member 68a. A passage 64 in sleeve 63 extending from inside barrel 50 and closed by a screw plug 64a permits removal of a fluid sample after recovery. Into a constriction 63a of sleeve 63 extends an elongation 33b of the central rod 33a carrying O-rings 33c to seal with constriction 63a. Within the lower end of member 33b is an insulator 56 enclosing a metal female contact member 57 which forms the bottom terminal of conductor 34. Threaded into the bottom of sleeve 63 is a connector tube 62 having pump inlet openings 62a and surrounded by a cylindrical screen 62b. At its lower end, connector 62 is coupled to a selector housing slidably sealed within the central cylindrical opening of lower end member 68d of sub 68. Lengthwise through tube 62 and the center of selector housing 67 extends a selector rod 61 having sliding seals with the housing and a central passage containing a continuation 34a of conductor 34. Sealed at and projecting upwardly from the upper end of selector rod 61 is an insulated, metal male connector 61a for electrically connecting conductor 34a to conductor 34 through connector 57. Encircling rod 61 with an O-ring seal near its upper end above inlet opening 62a, is a conical valve member 62c urged downwardly against a seat by a compression spring 62d. This acts as the foot or standing valve of the pump.

Within selector housing 67 is a body 66 from which projects an insulating sleeve 65 carrying two inwardly facing contact rings 65a and 65b best shown by FIG. 7. Conductor 34a extends through an insulator sleeve 60 surrounding selector rod 61 to a wiper ring 60a having projecting spring fingers which make contact to ring 65a or 65b depending on the lengthwise position of rod 61 in selector housing 67. A compression spring 61b urges selector 61 upwardly and maintains contact between members 61a and 57, as determined by the lengthwise position of rod 33b, until a stop nut 61c abuts the end of body 66.

From ring 65a, two oppositely-poled diodes 65c and 65d, and from ring 65b, two other oppositely-poled diodes 65e and 65f, respectively, connect through four bulkhead sealing connectors to electrical igniters in the bottom portion of the tool, only two of the four diodes and connectors being shown in FIG. 7. Two annular spaces 68e and 68f made by enlarging the central cylindrical bore of end member 68d are isolated by O-ring seals, including the seal 67a between them, and are respectively connected to hydraulic lines 95a and 82a (FIG. 1) through passages diagrammatically indicated by dashed lines 95b and 82b. Between the limits of a shoulder on sleeve 63 and a removable stop ring 66a, the sleeve 63, connecting tube 62, and housing 67 are slidable as a unit through sub 68 end members 68a and 68d except as restrained by a shear screw 63b.

By removing shear screw 63b and stop ring 66a, sleeve 63 may be withdrawn from housing end member 68a so as to give access to screw plug 64a and permit removal of a collected sample through passage 64. The substantial annular space surrounding screen 62b inside housing 68 allows a considerable solids accumulation to occur without the screen becoming blocked.

The shoe and sampling head assembly has the dual function both of isolating the desired sample point and of anchoring the tool against pullup during pumping. Scissors jack links 80 preferably are attached to heads 72 and 81 at pivot points remote from the side of the well toward which the links point, thus extending across the tool axis in the shape of an X. As compared with the short links of U.S. Pat. No. 3,217,804, this greater length of links 80 permits accommodation to relatively greater variations in hole diameter without excessive changes in lateral shoe-setting force. To avoid the possibility of pullup force affecting the seal of packer pad 75, its flanking shoes 73a, 73b receive somewhat more than half of the lateral setting force due to the pivotal connection points from the links 80 to the levers 79a and 79b being closer to the shoe pivots than to the sampling head pivots at 77.

The sampling head 78, besides having well-contacting inlet tube 78c connected by passages 78d to flexible hose 78a, contains a jet-perforating charge 74 aligned with tube 78c and detonatable by an electric cap 74a connected to one of the electrical conductors emerging from selector body 66.

To move head 81 upwardly toward head 72 and, through links 80, force shoe 71 and head 78 with shoes 73a, 73b outwardly against opposite sides of a well bore, force is transmitted through piston rod 83 from power piston 85 in cylinder 84. Rod 83 is hollow, the space inside it and surrounding it within cylinder 84 below sealing head 82 being at a low pressure such as atmospheric. An aperture 83a equalizes the low pressure throughout the space in cylinder 84 above piston 85.

Setting control sub 95 closes the bottom of cylinder 84. Extending upwardly from sub 95 along the axis of cylinder 84 through a sliding seal with piston 85 and into the center of hollow rod 83 is a dump tube 86 connecting the interior of sub 95 through a passage 86a with the low-pressure space above piston 85. Within sub 95 is a dump valve 87 in a body 88 sealed from hydrostatic pressure by a dump plug 89 containing an electrical detonator also connected to one of the conductors emerging from housing 66. Also within sub 95 is a force-regulating valve 90a controlling flow of hydraulic fluid at hydrostatic pressure from an inlet passage 90b to an outlet passage 90c going into cylinder 84. Valve 90a is actuated by co-axial coupled pistons 90 and 91 having sliding seals in a valve body 92, hydraulic fluid pressure on piston 90 acting to move it and valve 90a to the right to close the valve. Hydrostatic pressure through perforated retainer 94, plus the force of a compression spring 93, acts on small piston 91 to move the valve assembly toward the left to open the valve, the space between valve pistons 90 and 91 being at atmospheric pressure through passage 86a and a continuation thereof. A small-orifice choke 90d limits the flow of pressure hydraulic fluid into passage 90b.

Below sub 95 is an elongated hydraulic cylinder 96 containing a wiper piston 97 separating hydraulic oil above from well fluids below. Bottom nose 99 closing the bottom end of cylinder 96 has a passage sealed by a mud plug 98 containing an electrically explosive squib, also wired to one of the conductors emerging from housing 66, which squib can be fired to open the passage and admit fluid under well hydrostatic pressure into cylinder 96 to act upon piston 97.

FIG. 8 is a typical schematic electrical wiring diagram of the preferred prototype tool and the surface equipment used with it during a sampling operation, with the upper and lower portions of the figure respectively showing the surface and the downhole components. Cable 23 contains seven insulated conductors here numbered 1 through 7 surrounded by a grounded metallic wire sheath. Emerging from well bore 22 at the ground surface 21, cable 23 passes over a sheave 20,

through a depth and cable-tension measuring unit **19** to a powered hoisting reel **18** where the various conductors are brought out to conventional slip rings, not shown. A tension indicator **19***a* and depth indicator **19***b* show and preferably also record the data provided by unit **19**. Cable conductors **1** and **2** from the subsurface pressure unit **29** go to a pressure indicator and recorder **29***b*, while conductors **3** and **4** transmit fluid resistivity indications from electrodes **36** and **37** to a resistivity indicator and recorder **36***a*. Cable conductor **5** from ignition lead **34**, **34***a* is connected through a push-button switch **34***b* and a polarity-reversing switch **34***c* to a firing box **34***d* producing a direct-current voltage appropriate to fire the igniters in the lower portion of the downhole tool.

Cable conductor **6** connects through a two-pole switch **17** either to a spontaneous potential recorder **16** separately grounded at point **16***a*, or through a polarity-reversing switch **24***a* and ammeter **24***b* to a source **24***c* of direct current appropriate to operating tool-control motor **24**. Cable conductor **7** connects through a reversing switch **15***a* to a direct-current power supply unit **15** appropriate to the downhole electronic units.

In the downhole tool, conductor **7** is connected through oppositely poled diodes **15***c* and **15***d* respectively to measurement power supplies **29***c* and **36***d*, and to a relay **15***e* acting as a two-pole switch for conductor **6**. Unit **29***c* supplies a constant direct-current voltage to the pressure-sensing unit **29** which acts like a voltage divider **29***a* to transmit over conductors **1** and **2** a voltage varying with the ambient well-fluid pressure inside pump barrel **50** acting on unit **29**. Unit **36***b* converts the DC power to a constant alternating or pulsating current (i.e., converted by a vibrator or chopper) flowing through the liquid medium between electrodes **36** and **37**, the resulting voltage drop, varying directly with liquid resistivity, being amplified by an AC amplifier **36***c* and demodulated or rectified by unit **36***d* for transmission via conductors **3** and **4** to recorder **36***a*. As should be apparent, the output polarity of switch **15***a* determines which of diodes **15***c* and **15***d* is conducting, the other then being cut off or blocked.

With diode **15***c* conducting, relay **15***e* is open, and cable conductor **6** is connected to spontaneous potential electrode **14** through a series resistor **14***a*. Typically, as shown by U.S. Pat. Nos. 2,674,313 and 2,982,130, electrode **14** is mounted on an insulated external area of the tool or of the cable **23** thereabove, and exposed to the surrounding well fluids. Simultaneously, conductor **6** is connected through a Zener diode **14***b* to a calibration solenoid **14**c actuating calibration switches **14***d* and **14***e*. With surface switch **17** thrown to the "-Down" position, recorder **16** is connected to electrode **14** and, because of its typically low voltage relative to point **16***a*, diode **14***b* is essentially an open switch. Upon changing switch **17** to its illustrated upper position, however, the voltage of source **24***c* is sufficient to make **14**b conduct and energize solenoid **14***c*, the resistor **14***a* preventing a short circuit to ground through electrode **14**. The calibration switches then apply the full output voltage of supply **29***c* to conductors **1**, **2**, and substitute standard resistor **36***e* for the fluid resistivity cell, for the purpose of calibrating recorders **29***b* and **36***a*.

With diode **15***d* conducting and **15***c* blocked, relay **15***e* is energized, and voltage can be applied via conductor **6** from source **24***c* to operate the motor **24**. Switch **24***a* determines the voltage polarity of source **24***c* and thus the rotational direction of motor **24** and the resulting direction of movement of control rod **33**. The three normally-closed rod-position microswitches **28***d*, **28***e* and **28***f* are in series with motor **24** and ground. In parallel with end switches **28***d* and **28***f*, are oppositely-poled diodes **28***g* and **28***i*, respectively, while middle switch **28***e* has in parallel a resistance **28***h*. End switches **28***d* and **28***f* act as rod-motion limit switches when energized by projection **28***c* associated with rod **33**, diode **28***i* being nonconducting when switch **28***f* opens with rod movement to the right but becoming conducting when voltage is reversed to reverse the direction of motor rotation. Opening of middle switch **28***e* puts resistor **28***h* in series so as to cause a substantial drop in motor current as noted on ammeter **24***b*, which also shows the current cutoff by end switches **28***d* and **28** *f* at the respective ends of the motion of rod **33**.

As is indicated by the dotted mechanical-connection lines from rod **33** in FIG. **8**, positioning of the rod establishes or breaks the electrical connection between contacts **57** and **61***a*, and shifts contactor **60***a* between points **65***a* and **65***b*. Accordingly, by choice of firing-current polarity using switch **34***c*, combined with positioning of contactor **60***a* by rod **33**, any one of the diodes **65***c*, **65***d*, **65***e*, or **65***f* will pass firing current to its associated igniter.

In a typical operation, the sampling tool is initially filled with water, with rod **33** in its center position, resulting in the condition illustrated in FIG. **9**. Locking pin **44** is at the foot of cam **42**, lock **43** is in the engaged position, and seals **42***a* and **33***c* respectively are out of engagement with constrictions **42***b* and **63***a*. The tool interior is thus open to well pressure through the sample inlet path from inlet **78***c* through passages **78***d* and hose **78***a* into sub **68** during lowering. Accordingly, the prior-art problem of water-cushioning the sample chamber is avoided for the reason that the entire interior of the tool remains full of liquid at hydrostatic pressure. Electrically, contacts **57** and **61***a* are together, and contactor **6***a* is in engagement with ring **65***a*.

Setting of the shoes and sampling head is then done simply by closing reversing switch **34***c* on the proper polarity to pass electric current through diode **65***c*, and by pressing firing button **34***b* momentarily. This detonates mud plug **98**, admitting well fluids into the bottom of cylinder **96** beneath piston **97**. The hydraulic oil thereabove is placed under hydrostatic pressure and flows through choke **90***d*, passage **90***b*, past valve **90***a*, and through passage **90***c* into cylinder **84**, where it acts on piston **85** causing it to move head **81** upwardly. This movement continues until shoes **71**, **73***a*, **73***b*, and packer pad **75** are all firmly set against the wall of well **22**.

Before the shoes and sampling head contact the well wall, the hydraulic pressure in cylinder **84** and passages **90***b* and **9***c* is only that required to overcome friction and the hydrostatic pressure acting on rod **83** at the seals of head **82**, the main drop from hydrostatic pressure in cylinder **96** occurring across choke **90***d*. Both the hydrostatic pressure on piston **91** and the force of spring **93** urge valve **90***a* to the left so that it stays open. As the shoes and sampling head contact the well wall, upward motion of piston **85** stops, and continued flow through choke **90***d* rapidly raises the pressure on it and increases the setting force of the shoes and head against the well wall. At a predetermined force level, the pressure at valve **90***a* acting on large regulator piston **90** is sufficient to overcome the combined opposing forces of both spring **93** and the hydrostatic pressure acting on small piston **91**, so the coupled valve and pistons move to the right closing valve **90***a* and cutting off further flow of hydraulic oil into cylinder **84**.

The manner in which this mechanism regulates the shoe-setting force is as follows: the ratio of the face area of piston **85** exposed to hydraulic fluid pressure, to the cross-sectional area of rod **83** exposed to hydrostatic pressure, is a number *a* greater than unity, for example, 3.5. Coupled regulator pistons **9** and **91**, exposed to the same two respective pressures, have the same ratio of areas *a*. The power piston **85** face area is larger than the face area of regulator piston **90** by a factor *n* substantially greater than unity, for example, $n = 83$. The low-pressure space above piston **85** is in communication with that between pistons **90** and **91** through opening **83***a*, dump tube **86**, and passage **86***a* so that the manner in which the various pressures act on the power piston and on the regulating piston assemblies is the same — only the magnitudes of resulting forces differ because of the area ratio *n*. That is, a given hydrostatic pressure acting on pistons **85** and **90** creates a force on **85** *n* times greater than on **90**. When this pressure level becomes sufficient for the force on piston **90** to overcome both the force of hydro-static pressure on piston **91** and the force F of spring **93**, then the force of piston **85** acting to overcome the hydrostatic pressure on rod **83** and to set the shoes

produces an upward force nF at head **81**. Thus, if spring **93** exerts a force of 48 pounds, the shoe-setting force at head **81** for $n = 83$ is 83×48, or about 4,000 pounds.

Assuming, for example, that piston **85** is 5 square inches larger than rod **83** in cross-sectional area, then any hydrostatic pressure that is 800 pounds per square inch or greater provides this shoe-setting force. This means that a submergence depth of at least about 1,600 feet in typical well-bore liquids is usually sufficient to provide the necessary setting force, and any greater submergence is prevented from creating more than this desired setting force, which could damage the linkage mechanism or overstress the well wall and cause it to crumble and possibly leak around the packer pad **75**.

With the shoes and sampling head set against the formation, and with control rod **33** still positioned as in FIG. **9**, switch **34***c* is reversed, and **34***b* momentarily closed to send ignition current through diode **65***d* to fire perforator charge **74**. This is only to assure that any mud cake on the well wall or other obstructing material will not interfere with the entry of formation fluids into the sample inlet, and accordingly may be dispensed with if the formation produces freely without stimulation. It is not necessary to open the sampler, as it has remained open throughout the lowering and setting operations.

Next, switch **17** is thrown from recorder **16** to the upper position as shown in FIG. **8**, switch **15***a* is thrown to the polarity to pass current through diode **15***d* and energize relay **15***e*, and finally switch **24***a* is thrown to the polarity to cause motor **24** to move rod **33** upwardly to the position shown for it in FIG. **10**. This is signaled by the opening of microswitch **28***d* and cut-off of motor current seen on ammeter **24***b*. In this movement, cam **42**, through pin **44** depresses lock **43** against spring **43***a*, unlocking sub **46** from body **45** so that pump plunger **49** is free to move upwardly through seals **47** relative to sub **48** and to barrel **50**. FIG. **10** shows these relative positions of the pump parts shortly after the starting of an upstroke by pulling upwardly on cable **23**.

It is preferred that the effective cross-section area of plunger **49** be about unity (i.e., about 1 square inch), as this gives approximately a 1:1 ratio between (1) the incremental lifting force, shown by tension indicator **19***a*, and applied through cable **23** to raise plunger **49** and stroke the pump, and (2) the resulting suction pressure at inlet **78***c*, within inlet sub **68**, and in the interior of the pump below traveling valve **45***b*. For example, neglecting seal sliding friction, an increased upward pull of 500 pounds on cable **23** produces a sample suction pressure of about 500 pounds per square inch in sub **68**. The ambient pressure within the pump barrel is transmitted to transducer **29** and indicated by recorder **29***b* as follows: rod extension **33***a* has a wall aperture **33***d* giving communication from the pump interior into the central passage of the rod through which extends conductor **34**. Another aperture **33***e* communicates from the rod central passage to the upper side of piston **41** in cylinder **41***a*, and a third aperture **40***c* communicates from cylinder **41***a* to the recess **29***c* into which transducer **29** is sealed.

As should be apparent, depending on whether pad **75** is or is not sealed against the well wall and on the rate of sample flow or pump suction conditions, the indicated fluid pressure will be well-bore hydrostatic, pump-suction, formation-producing, or formation-pore static pressure. Thus, the record of pressure recorder **29***b*, coordinated with suction pressure from tension indicator **19***a*, contains much information about the effectiveness of seal of packer **75**, as well as about the producing characteristics of the formation under a variety of testing and flowing conditions.

The sample-pumping operation and rejection of sample through outlet **40***a* into the well bore can be continued more or less indefinitely, until a satisfactory sample is assured from the resistivity indications on recorder **36***a*. When the sample is finally considered satisfactory, pumping is stopped, and motor **24** is energized to move rod **33** to its lowermost position as detected by microswtich **28***f*. This puts cam **42** in the position shown in FIG. **11**, so that lock **43** not only re-engages the notch of lock sub **46**, but also seal **42***a* engages constriction **42***b*, sealing the upper end of the pump chamber. Simultaneously, the lower end of the pump is sealed by seals **33***c* in constriction **63***a*, connectors **57** and **61***a* re-establish contact, and selector rod **61** is pushed down to make contact between selector **60***a* and ring **65***b*. Then, switch **34***c* is set and button **34***b* depressed to send ignition current through diode **65***e* to dump valve **87**. Explosion of squib **89** opens the central passage to hydrostatic pressure, which drives valve member **87** to the left, connecting passages **90***c* and **86***a*. The hydraulic fluid exerting pressure on piston **85** then flows rapidly through passage **86***a*, dump tube **86**, and opening **83***a* into the low-pressure space in cylinder **84** above piston **85**. The presence of choke **90***d* assures that the hydraulic fluid below piston **85** can empty before all of the remaining hydraulic fluid in cylinder **96** flows to the dump chamber.

Ordinarily, the release of pressure by dump valve **87** lets springs **80***a* and **80***b* retract the shoes and sampling head, along with the assistance of hydrostatic pressure acting on piston rod **83** to move piston **85** downwardly when the pressure acting on it has thus been relieved, and the tool can then be raised to the ground surface.

If it is likely that there is a pressure differential across pad **75**, switches **34***c* is reversed and button **34***b* momentarily pressed to detonate the equalizer charge, not shown but corresponding to mud plug **98** except for being in a wall of inlet sub **68**. Upon thus admitting well pressure into sub **68**, it travels through tube **78***a* to the formation face at packer **75**, equalizing any pressure differential existing there. If pad **75** still adheres to the formation, it can easily be sheared free of its backing plate to which it is lightly held by small screws, to be left behind when the tool is hoisted to the ground surface.

In the event of any electrical malfunction such that dump valve actuator plug **89** and the equalizer plug cannot be fired, an alternate release procedure is available. A typical cable **23** might have a breaking strength of 11,000 pounds and would pull free of cable head **32** at about half this or at 5,500 pounds. A maximum pump suction pressure of 3,000 pounds, corresponding to 3,000 pounds additional pull on cable **23**, might be allowable. Shear screw **63***b* holding sleeve **63**, tube **62**, and housing **67** fixed relative to sub **68** is arranged to shear upon an upward pull by cable **23** of 2,000 pounds with the pump locked. When screw **63***b* shears, the assembly, consisting of sleeve **63**, tube **62**, and housing **67** moves upwardly in sub **68** until stopped by ring **66***a* abutting lower end **68***d* of the inlet sub **68**. This moves seal ring **67***a* into annulus **68***e*, whereupon the hydraulic fluid in passage **90***c* flows through tubing **95***a* to annulus **68***e*, thence between the mating surfaces to annulus **68***f*, and returns through tubing **82***a* to the low-pressure space below power head **82**. At the same time, seal **68***b* moves into annulus **63***c* admitting hydrostatic well pressure into sub **68** and via tube **78***a* to sample inlet **78***c*, thus equalizing any pressure differential that might be there to interfere with freeing the tool.

The reason why a 3,000-pound pull on cable **23** during pumping does not shear 2,000-pound shear screw **63***b* can best be understood from FIG. **12**, which is a simplified drawing of the involved structure of the lower portion of the tool. Pump barrel **50** may be considered to extend completely through inlet sub **68**, with seal **68***b* at upper end **68***a* being larger than seal **67***a* at lower end **68***d* by just the area of plunger **49**. That is, the barrel cross-section area A is the same at both ends, and the lower end **68***d* area is therefore larger than upper end **68***a* area by the area of plunger **49**. Assume, now, that a 3,000-pound pull on cable **23** and plunger **49** creates a (negative) suction pressure of 3,000 pounds per square inch inside chamber **68** relative to the hydrostatic pressure outside. This unbalances the force of the external hydrostatic pressure on ends **68***a* and **68***d*, the upward force on **68***d* being 3,000 pounds greater than the downward force on end **68***a*, because **68***d* is 1 square inch (the plunger area) larger than **68***a*. Hence, the 3,000-pound upward pull on cable **23** is hydraulically transmitted to housing **68** and thence through support

bars 69*a* and 69*b* ultimately to the well wall via shoes 71, packer 75, and shoes 73*a*, 73*b*. Shear screw 63*b* during pumping therefore remains unloaded except for the frictional drag of seal 47 against plunger 49.

If efforts to free the tool by firing the dump plug and equalizer charges are unsuccessful, and if the other manipulations to relieve shoe-setting pressure and equalize packer differential pressure are still unsuccessful, and the shoes remain set, cable 23 can be broken free at head 32 and withdrawn, and conventional fishing tools may then be run on a tubing or drill pipe string. After engaging the upper end of the tool housing with the fishing tool, a sufficient downward force or jar on the tool shears the connection between fixed head 72 and the support bars 69*a*, 69*b*. Since the slots in bars 69*a*, 69*b* adjacent head 72 are longer than the corresponding slots at head 81, the latter is stopped sooner than head 72, so that there is no longer any backup for the head 81 to work against. Accordingly, no lateral force remains in the arms 80 to prevent the shoes and sample head from retracting away from the well wall.

A further feature contributing to the reliable operation of this tool arises in the function of annular piston 41 in sub 40 of FIG. 3. Rod 33 passes from atmospheric pressure within housing 140 through a sliding seal into a hydrostatic-pressure environment. Ordinarily, a force equal to the hydrostatic pressure times the rod cross-section area would have to be overcome by motor 24 to move rod 33 downwardly against this hydrostatic pressure. The face area of annular piston 41, however, is made equal to the rod cross-section area, so that the hydrostatic pressure acting on the upper face of annular piston 41, its lower face being at atmospheric through passage 41*b*, creates just the downward force necessary to balance the upward force of hydrostatic pressure on rod 33. Hence, motor 24 is required only to overcome the sliding friction of the various seals associated with rod 33 and its extensions in moving the rod to its various positions. Because of this pressure balance provided by annular piston 41, the tool of this invention is virtually unlimited as to the hydrostatic pressure or well depth from which a formation fluid sample can be satisfactorily recovered.

We claim:

1. In a side-wall well-formation fluid sampler of the type run on and controllable over a well-logging cable, said sampler comprising an elongated body having a sample-receiving inlet, means on said body including wall-contacting anchor shoes for pressing said inlet against a well wall at a desired sampling point, a fluid flow path extending from said inlet through a sample-holding space within said body to an outlet opening into the well bore, remote-indicating fluid-pressure and fluid-character testing means in communication with said flow path, and means for transmitting to and exhibiting at the ground surface the indications of said pressure and character-testing means, the improvement comprising

a pump in said flow path operable by reciprocating said cable to draw formation fluids into said inlet, flow them along said path, and eject them through said outlet into the well bore,

said pressure-indicating means being responsive to the suction pressure of said pump acting to draw fluids through said inlet.

2. A sampler as in claim 1 in which

said pump is one having a plunger and a barrel, one of said plunger and barrel being operatively attached to said cable, and the other to said wall-contacting anchor shoes.

3. A sampler as in claim 2 including also

releasable locking means to hold said plunger and barrel fixed relative to each other, and

means controllable from the ground surface to release said locking means, whereby one of said barrel and plunger may be reciprocated relative to the other by said cable.

4. A sampler as in claim 2 in which

said plunger has a cross-sectional area of approximately unity, so that the suction pressure within said pump barrel corresponds approximately to the force increment required to lift said cable.

5. A sampler as in claim 2 in which

said plunger has a longitudinal passage extending axially therethrough, at least one insulated electrical lead extending through said passage, and

connection means cooperating with said at least one lead to complete at least one insulated electrical circuit into the portion of said sampler below said pump.

* * * * *