Aug. 8, 1961 A. E. DEMPSEY, JR 2,995,018

EVAPORATIVE CONDENSER

Filed Feb. 17, 1959

FIG. 1

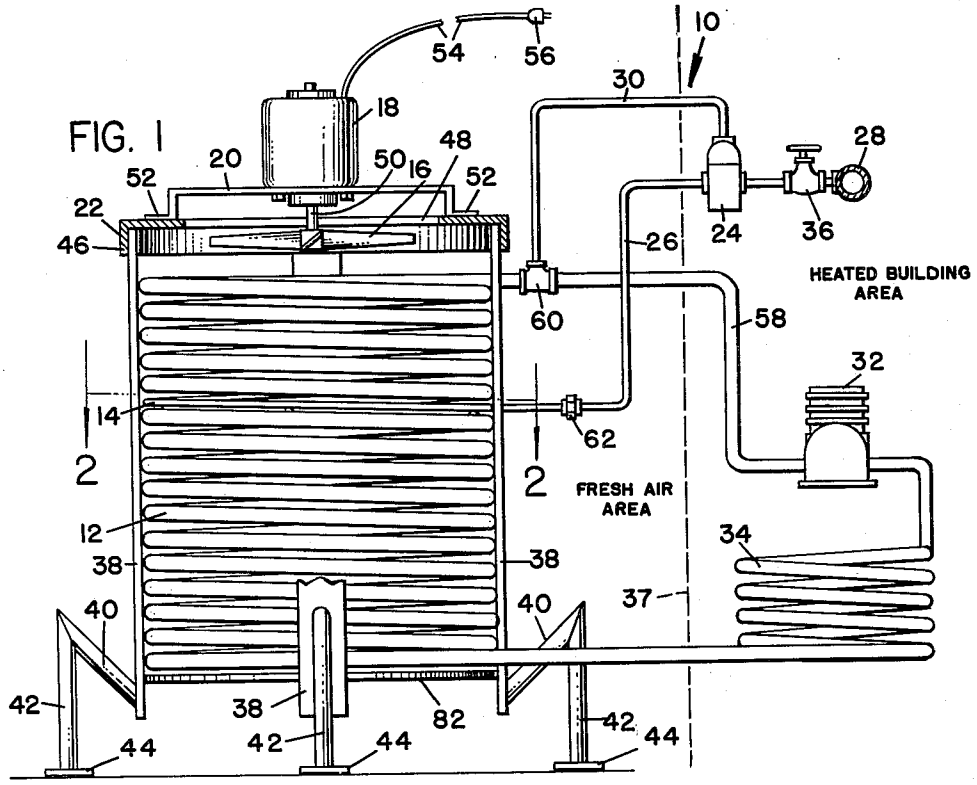

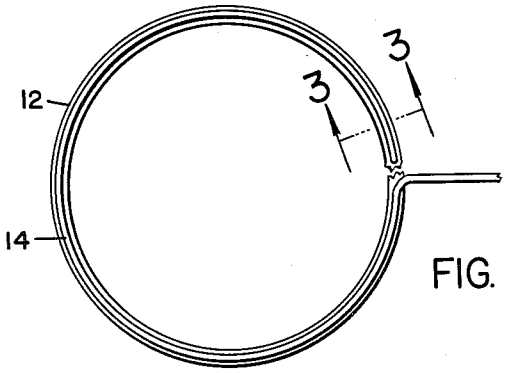

FIG. 2

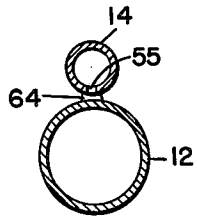

FIG. 3

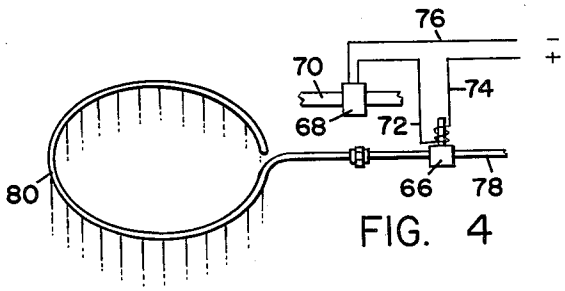

FIG. 4

INVENTOR.

ARTHUR E. DEMPSEY, JR.

BY Hiram A. Sturges Agent

United States Patent Office

2,995,018

Patented Aug. 8, 1961

1

2,995,018

EVAPORATIVE CONDENSER

Arthur E. Dempsey, Jr., Council Bluffs, Iowa

Filed Feb. 17, 1959, Ser. No. 793,870
2 Claims. (Cl. 62—305)

This invention relates to refrigeration of the continuously operating type in which a refrigerant is expanded in a refrigeration unit, compressed, and discharged to a condensing coil from which it is returned to the refrigerating unit; and in particular a refrigerating system in which a refrigerant is compressed and cooled by water not sprayed but dribbled over the lower portion of a condensing coil through which the refrigerant is circulated and over which air is circulated, and in which the volume of cooling water is controlled by a pressure actuated valve connected to the discharge of the compressor, or by a solenoid operated valve.

As the features of the invention are expressable only by many objectives, convenient reference to the features of the new combination will be found in the following outline:

(1) An annular vertical coil.

(2) A fan pulling air upwardly at the center of the coil.

(3) A block plate preventing air from entering the bottom of the coil whereby air enters only across and between the coils.

(4) Water dribble loop.

(5) Absence of water recirculation means.

(6) The spacing of the water dribble loop from the top of the coil for making an air-cooled coil area for pre-cooling refrigerant before it enters a water-cooled lower coil area.

(7) The coil being substantially a single coil substantially open on its interior for flow of air without substantial impedance, as distinguishes from multiple coils or coils within coils common in the prior art.

The purpose of this invention is to provide a refrigerating system in which water dribbled over a condensation coil of the system is controlled by the pressure of refrigerant in the system, whereby on cool days when the ambient temperature, temperature surrounding the coil is sufficiently cooled, the system will operate without any water "dribbling" down whereby at such time it is cooled only by the surrounding air, with this air cooling resulting in further water economy, and further in which the discharge temperature and pressure of the compressor is greatly reduced to a percentage depending upon the atmospheric air temperature whereby the compressor requires less electrical power, resulting in a substantial power saving.

The object of this invention is, therefore, to provide a condenser having a water spray loop for dribbling water over a coil wherein the water is supplied from a service water line of a building in which the unit is installed and wherein the water supplied to the loop is controlled by a pressure actuated valve connected to the discharge side of a compressor of the system.

Heretofore the common type of a system has been one in which water is delivered from a line to a storage tank with the water level controlled by a float valve and in which the water is not dribbled but is liberally sprayed over the condenser coils far in excess of the amount needed for evaporation with the excess water that falls down over the coils re-circulated by a recirculation pump.

With such conventional systems as evaporation occurs the minerals from the water which do not evaporate remain to contaminate the recirculated water, causing the recirculated water to become what is commonly called "soupy" which means saturated with minerals.

As operation of a conventional system continues the

2

high mineral content causes excessive formation of scale coating on the coils which reduces the efficiency of heat transfer. An object of my invention is therefore to provide a system which will use a minimum of water evaporation proportional to cooling attained whereby the quantity of minerals does not tend to be excessive.

Another object is to provide a system in which water is not recirculated so that the minerals remaining after evaporation do not re-enter the system to contaminate it with excess scale formation.

Still another object is to provide a system of a new combination of correlated inter-cooperating elements in which a small regulated excess amount of water is placed on the coils only slightly in excess of the amount needed for evaporation whereby this slight excess of water tends to wash away the minerals which would otherwise tend to collect on the coils through evaporation.

A further disadvantage of conventional recirculated cooling water systems is in the fact that after the water becomes "soupy" or of excess concentration of minerals, it has been the practice to introduce a sufficiently great and wasteful quantity of water from the outside supply line into the storage tank for causing water to wastefully spill out near the top of the storage tank through an overflow pipe to cause a dilution of the mineral content of the recirculating water in the tank. This spillage causes costly water bills for the users.

It is an object of my system of a new combination of correlated intercooperating elements to eliminate this waste through making it unnecessary. In prior art systems the water distribution header delivering water to the coils has commonly been called a "spraying header."

I prefer not to call the water distribution header in my system a spray header because the word "spray" brings to mind spray that is wind-blown from a sprinkler onto the heads of people and buildings on adjacent property. In my system of a new combination of cooperating elements the water "dribbles" from the header in a volume proportional to quantity of cooling attained, so different from the quantity "sprayed" on in the conventional system.

Also, the word "spray," as applied to a conventional system, suggests the use of a pump and one advantage of my system is to avoid use of a pump, by using water supply line pressure usually a city line pressure.

Elimination of a pump eliminates also first cost maintenance cost and also operating cost of a pump.

A particular object is to provide a system of a new combination of correlated intercooperating elements in which the first costs of a float valve, a circulating pump and an expensive storage tank for recirculating water are all eliminated and unnecessary.

A further object is to provide for a saving in water usage through the distribution of water only over a lower portion of a coil with the upper portion of the coil cooled by air as air is quite effective as a coolant in the upper part of the coil because it is the upper part of the coil which is so hot, and at a much higher temperature where the percentage of cooling in degrees can be the most effective.

In this way water need be distributed over only the lower part of the coil as reduces the total water consumption required.

Still another advantage of air cooling in the upper part of a coil is that part of the coil is never subjected to scale formation and moreover that lower part of the coil which is cooled by water receives a lesser rate of scale deposit because the first coils to receive water cooling are at a lower temperature than would be the case if the water was distributed from the top-most part of the coil downwardly and because when a coil is at a lower temperature the rate of scale deposited is lower.

A still further object of the invention is to provide a coil for a condenser of a refrigerating system in which the convolutions of the coil are exposed, thereby facilitating cleaning.

And a still further object is to provide an automatically operating refrigeration unit in which water is dribbled over a condenser coil of the unit providing an evaporative condenser in which the unit is of simple and economical construction.

Heretofore water has always been re-circulated for use in cooling and is collected in a catch pan and is re-circulated over and over. Typical uses of this are found in the patent of T. S. Wetter, titled Refrigerating Apparatus, Patent 2,231,856, issued February 11, 1941, and in the patent to A. W. Ruff, titled Evaporative Refrigerant Condenser, Patent 2,737,789, issued March 13, 1956.

In contrast to the standard, conventional system with catch pan and re-circulation, I eliminate the catch pan for the first time. This elimination of a part or when pipe and pump are considered, rather the elimination of parts, is an important feature of my invention.

I make possible the elimination of these parts, the elimination of their expense and the elimination of their maintenance through the provision of having my concept of an open, unhoused coil with a water dribble header part way down the coil is annular in top plan view, preferably cylindrical, for providing a sufficiency of coil area in a practical amount of vertical distance, as distinguished from a mere serpentine coil, thus making it practical to use my new concept of water dribble instead of a water spray, making possible for the first time the elimination of catch-pan pump, catch-pan float valve, etc.

Since most spray units also have spray nozzles rather than merely openings in spray headers, my system also eliminates these spray nozzles.

In all re-circulating systems as water evaporates minerals are left behind whereby as evaporation continues, constant water re-circulation present in all systems except the invention herein disclosed, the water in the catch-pan becomes "soupy" with minerals, making it a necessary nuisance of maintenance to attend to the matter of adding extra water to the soupy old water in order to dilute its high concentration of scale forming minerals.

In contrast in my system, I simply provide enough excess water constantly to continually carry these minerals away. This is made possible through using my over-all arrangement that makes possible the use of a minimum amount of water in the first place.

Another nuisance of maintenance with a catch-pan is being sure it is drained before it freezes in the fall. In many buildings there are no janitors and the management of the building has many other things on their mind and this matter of draining the catch-pan in a unit which is out of their sight, way up on the roof, is a maintenance matter that they are often forgetting, resulting in frozen and bursted pipes and bursted catch-pans.

Certain installations of the prior art have multiple coils, one within the other as is the regular, orthodox, evaporative condenser which is a nest of coils with air passing through them in one direction, and a water spray passing down over them in the other direction. This multiple coil arrangement blocks air flow.

My coil is designed for fresh air blowing over every square inch. Multiple coils, one within the other, are designed for fresh air flow only over the lowermost coils. It is heated air from the lower coils that contact the middle coil and multiple heated air from the middle and lower coils that hits the upper coils, etc., thus reducing the efficiency.

A main objective of my invention is the positioning of a water dribble loop or header about one-fourth or one-third of the way down from the top of the coil. This permits air cooling to remove super-heat from the gas in the upper coils, thus reducing the duty of the water in condensing the gas to a liquid in the lower coils.

The economic factor of this greater use of constantly running water is significant and considerable.

However a main point is that cooling water leaves scale as it evaporates. Cooling air does not. Thus my new concept of cooling first with air in the upper coils removes the temperature of the refrigerant considerably to the end that by the time the refrigerant has reached the lower two-thirds of the coils which are being cooled by water, the refrigerant is already at a temperature sufficiently low to greatly reduce the amount of scale formation.

It must be remembered that water forms scale at a much higher rate when it strikes the pipe full of very hot refrigerant than it does when it strikes a coil with cool refrigerant, thus cooling the refrigerant first by air delivers the refrigerant in a cooler state to the lower coils where the water cooling forms scale at a substantially lesser rate than would be formed if there would be no air cooling in the area above my water-cooled lower coils.

With these and other objects and advantages in view the invention embodies a vertically disposed coil having a spray loop or header spaced downwardly from the upper end and having a motor driven fan positioned on the upper end for drawing air upwardly through the coil, and a pressure actuated valve positioned in a connection from the water header to a service water line to regulate the quantity of water supplied to the water header, and connected to the discharge side of a compressor of the refrigeration unit, whereby the water dribble is controlled by the pressure of the discharge of the compressor.

Other features and advantages of the invention will appear from the following description taken in connection with the drawings, wherein:

FIGURE 1 is a diagrammatic view showing the improved refrigeration unit with the coil of the condenser supported in spaced relation to a floor, and with a water dribble header in the coil connected to a service line and provided with a pressure actuated valve connected in the discharge of a compressor of the unit.

FIGURE 2 is a plan view taken on line 2—2 of FIGURE 1 showing a water dribbling loop or header positioned in the coil of the condenser.

FIGURE 3 is a cross section through one of the convolutions of the condenser coil taken on line 3—3 of FIGURE 2 showing the water dribble header secured to the coil, such as by welding.

FIGURE 4 is a modification showing a solenoid actuated valve instead of the pressure actuated valve for controlling the water supplied to the water dribble header.

While one embodiment of the invention is illustrated in the above referred to drawings, it is to be understood that they are merely for the purpose of illustration, and that various changes in construction may be resorted to in the course of manufacture in order that the invention may be utilized to the best advantage according to circumstances which may arise, without in any manner departing from the spirit and intention of the device, which is to be limited only in accordance with the appended claims. And while there is stated the primary field of utility of the invention, it remains obvious that it may be employed in any other capacity wherein it may be found applicable.

In the accompanying drawings, and in the following specification, the same reference characters are used to designate the same parts and elements throughout, and in which the numeral **10** refers to the invention in its entirety, numeral **12** indicating a vertically disposed condenser coil, numeral **14** a water dribble loop or header spaced downwardly from the upper end of the coil, numeral **16** a fan rotated by a motor **18** mounted by arms **20** on a head **22**, numeral **24** a pressure actuated valve assembly positioned in a tube **26** connecting the water dribble header **14** to a service pipe **28** and connected by a tube **30** to a pipe connecting the upper end of the coil **12** to a compressor **32** in a refrigeration unit

including a coil 34, and numeral 36 a manually actuated valve also positioned in the tube 26.

A dotted line 37 has been drawn through FIG. 1 to indicate the inside and outside of a building which is significant for the following reasons: whereas in systems which use storage tanks, there is the necessity of draining the storage tank in the winter to avoid damage from freezing.

It is my desire to place all parts of the system shown on the righthand side of the dotted line 37 in FIG. 1 on the inside of a building where building heat is such that liquid in these parts is in no danger of freezing.

The water line 26 is preferably made of pipe that is heavy enough so as to avoid splitting of the pipe 26 by freezing of the water therein whereby in this way I provide a system that is safe in sub-zero temperatures and which eliminates the necessity of drainage of the water tank as was necessary in prior art systems which used water tanks. Since the coil is cooled by air and not by water when the atmospheric temperature is below freezing there are no disadvantages.

The condenser coil 12 is provided with vertically disposed bars 38 having legs with upper sections 40 and lower sections 42 having flanges 44 on lower ends extended from the lower ends, and the upper ends of the bars are secured in the head 22, being secured to the inner surface of a flange 46 depending from the head. The head 22 is provided with an opening 48 below which the fan 16 is positioned. The fan is carried on the lower end of the motor shaft 50, and the arms 20 which support the motor are secured to the upper surface of the head by flanges 52. The motor is provided with an electric cord 54 having a conventional plug 56 on the extended end.

The pipe connecting the upper end of the coil 12 to the compressor 32, which is indicated by the numeral 58, is provided with a fitting 60 to which the tube 30 is connected. The tube 26 is provided with a coupling 62 by which the tube is connected to the water dribble header 14, and the water dribble header is perforated 55 to provide a dribble, as shown in FIGURE 4. The dribble header is secured to one of the convolutions of the coil 12 by welding, as indicated by the numeral 64, or by other means.

In the modification illustrated in FIGURE 4 the pressure actuated valve 24 is replaced by a solenoid valve 66 connected to a pressure switch 68 in a pipe 70 similar to the pipe 58 by a wire 72, the opposite terminal of the valve 66 being connected by a wire 74 to a source of current supply, and the opposite terminal of the switch 68 being connected by a wire 76 to the opposite terminal of the source of current supply. The valve 66 is positioned in a tube 78 similar to the tube 26, and the tube 78 is connected to a dribble header 80 similar to the water dribble header 14.

A circular horizontally disposed plate 82 is secured to the uprights 38 and adjacent the lowermost one of the convolutions of the coil 12.

Operation

The refrigeration unit is installed as illustrated and described and refrigerant or a suitable coolant is compressed by the compressor 32 and circulated through the condenser coil 12 with the pressure in pipe 58 actuating the pressure valve assembly 24 to permit water to pass to the water dribble header 14 proportional to pressure in pipe 58 whereby water is admitted to the dribble loop by said valve assembly proportional to pressure in said piping so that more water is admitted to said dribble loop when pressure in pipe 58 is higher and less is admitted when such pressure is lower for effective and economical water conservation. It is preferred that the water dribble header be spaced downwardly in the coil a distance corresponding to approximately one-third of the length of the coil.

The flow of water may also be controlled by electrical means with the pressure actuated switch 68 closing a circuit to the solonoid actuated valve 66, and in such a case the switch 68 and valve 66, electrical energy and wiring all together compose a pressure valve assembly in the meaning of the appended claims.

It will be seen that when the fan 16 is in operation, air will be drawn through the coils to expedite evaporation of water on the coil 12. Since the plate 82 blocks the lower end of the coil 12, air is drawn in from the sides of the coil whereby each convolution is subjected to a draft of air extending completely around it and not just vertically through the center of the coil as would be if the plate 82 was not used. I prefer that the amount of line pressure flow actually used by my system by regulated by the valve 36 so as to be slightly more than needed to replace water which evaporates from the coil whereby use of a float valve controlled water level in a storage tank is unnecessary eliminating the float valve, the pump, and the storage tank, made practical actually by the characteristic low water-use efficiency of my system.

This inherent characteristic attained by my concept is a new combination of features, never heretofore combined, one feature of which is a coil of a particular shape and position in my water distribution arrangement.

From the foregoing specification, it will become apparent that the invention disclosed will adequately accomplish the functions for which it has been designed and in an economical manner, and that its simplicity, accuracy, and ease of operation are such as to provide a relatively inexpensive device, considering what it will accomplish, and that it will find an important place in the art to which it appertains when once placed on the market.

It is thought that persons skilled in the art to which the invention relates will be able to obtain a clear understanding of the invention after considering the description in connection with the drawings. Therefore, a more lengthy description is regarded as unnecessary.

Changes in shape, size and arangement of details and parts such as come within the purview of the invention claimed may be resorted to in actual practice, if desired.

Having now described the invention that which is claimed to be new and desired to be procured by Letters Patent is:

1. A refrigerating condenser comprising a vertically disposed condenser coil of annular shape in top plan view having an opening therethrough from bottom to top, said coil being substantially a single coil substantially open on its interior for flow of air therethrough without substantial impedance, means for supporting the coil upright, blocking means extending across the bottom of said opening in said coil and blocking air flow into the coil bottom except between the convolutions, means at top of said coil and positioned to draw air inwardly through the convolutions of the coil and upwardly through the coil, means for so mounting said air drawing means, and a horizontally positioned annular water dribble loop, of substantially the same shape as that of the coil, mounted in the coil and spaced downwardly from the upper end thereof a substantial number of convolutions, whereby the refrigerant flows from the top downwardly and is first cooled with air in the upper part of the coil above the loop whereby its temperature is reduced before it reaches the water cooled lower part of the coil below said loop so that water cooling under said loop in the lower part of the coil will not produce scale formation at such a high rate as it would without first air-cooling the refrigerant in the upper part of the coil which is above said loop, and said loop being spaced a substantial distance above the bottom of the coil whereby the lower water-cooled portion of the coil is of substantial size for effective water cooling, said condenser coil being substantially open at its sides whereby external air from the areas at the sides of said coil can enter between and sweep over said convolutions in a first and cooling stage of air motion,

said external air being of lower humidity and much lower temperature than relatively saturated air passing upwardly from the interior of the lower part of the coil, and whereby said air from the sides of said coil, when it has passed across said convolutions and accomplished its heat transfer and effectively caused water evaporation thereby, is exhausted upwardly in a second and discharge stage of air motion through the interior of said coil and out the top of said coil, a compressor, piping operably connecting said coil and said compressor, and means for delivering water to said water dribble loop.

2. The combination of claim 1 in which said means for delivering water to said water dribble loop comprises a pressure responsive valve assembly having an inlet connectable to a water line and having an outlet, means connecting said pressure valve assembly outlet to said water dribble loop, and means operably connecting the pressure responsive valve assembly to said piping whereby water is admitted to said dribble loop by said valve assembly in proportion to pressure in said piping so that more water is admitted to said dribble loop when pressure in said piping is higher and less water is admitted when said pressure is lower for effective and economical conservation of cooling water.

References Cited in the file of this patent

UNITED STATES PATENTS

2,076,119	Carraway	Apr. 6, 1937
2,231,856	Wetter	Feb. 11, 1941
2,551,758	Newton	May 8, 1951
2,600,738	Dempsey	June 17, 1952
2,737,789	Ruff	Mar. 13, 1956