(12) INTERNATIONAL APPLICATION PUBLISHED UNDER THE PATENT COOPERATION TREATY (PCT)

(19) World Intellectual Property Organization
International Bureau

(43) International Publication Date
10 November 2022 (10.11.2022)

WIPO | PCT

(10) International Publication Number
WO 2022/235262 A1

(51) International Patent Classification:
A61B 1/00 (2006.01) *A61B 1/015* (2006.01)
A61B 1/12 (2006.01) *A61B 17/34* (2006.01)

(21) International Application Number:
PCT/US2021/030700

(22) International Filing Date:
04 May 2021 (04.05.2021)

(25) Filing Language: English

(26) Publication Language: English

(71) Applicant: **BAYOU SURGICAL, INC.** [US/US]; 114 Holmes Road, Houston, Texas 77045 (US).

(72) Inventors: **ALURU, Rajitha**; 114 Holmes Road, Houston, Texas 77045 (US). **COHN, William**; 114 Holmes Road, Houston, Texas 77045 (US). **SALAZAR, Jorge**; 114 Holmes Road, Houston, Texas 77045 (US). **SLOSS, Scott**; 114 Holmes Road, Houston, Texas 77045 (US). **UMARU, Abdul**; 114 Holmes Road, Houston, Texas 77045 (US).

(74) Agent: **TALBOT, C. Scott** et al.; Cooley LLP, 1299 Pennsylvania Ave., Suite 700, Washington, District of Columbia 20004 (US).

(81) Designated States *(unless otherwise indicated, for every kind of national protection available)*: AE, AG, AL, AM, AO, AT, AU, AZ, BA, BB, BG, BH, BN, BR, BW, BY, BZ, CA, CH, CL, CN, CO, CR, CU, CZ, DE, DJ, DK, DM, DO, DZ, EC, EE, EG, ES, FI, GB, GD, GE, GH, GM, GT, HN, HR, HU, ID, IL, IN, IR, IS, IT, JO, JP, KE, KG, KH, KN, KP, KR, KW, KZ, LA, LC, LK, LR, LS, LU, LY, MA, MD, ME, MG, MK, MN, MW, MX, MY, MZ, NA, NG, NI, NO, NZ, OM, PA, PE, PG, PH, PL, PT, QA, RO, RS, RU, RW, SA, SC, SD, SE, SG, SK, SL, ST, SV, SY, TH, TJ, TM, TN, TR, TT, TZ, UA, UG, US, UZ, VC, VN, WS, ZA, ZM, ZW.

(84) Designated States *(unless otherwise indicated, for every kind of regional protection available)*: ARIPO (BW, GH, GM, KE, LR, LS, MW, MZ, NA, RW, SD, SL, ST, SZ, TZ, UG, ZM, ZW), Eurasian (AM, AZ, BY, KG, KZ, RU, TJ, TM), European (AL, AT, BE, BG, CH, CY, CZ, DE, DK, EE, ES, FI, FR, GB, GR, HR, HU, IE, IS, IT, LT, LU, LV, MC, MK, MT, NL, NO, PL, PT, RO, RS, SE, SI, SK, SM, TR), OAPI (BF, BJ, CF, CG, CI, CM, GA, GN, GQ, GW, KM, ML, MR, NE, SN, TD, TG).

Declarations under Rule 4.17:
— *as to applicant's entitlement to apply for and be granted a patent (Rule 4.17(ii))*

Published:
— *with international search report (Art. 21(3))*

(54) Title: INTRAOPERATIVE ENDOSCOPE CLEANING SYSTEM

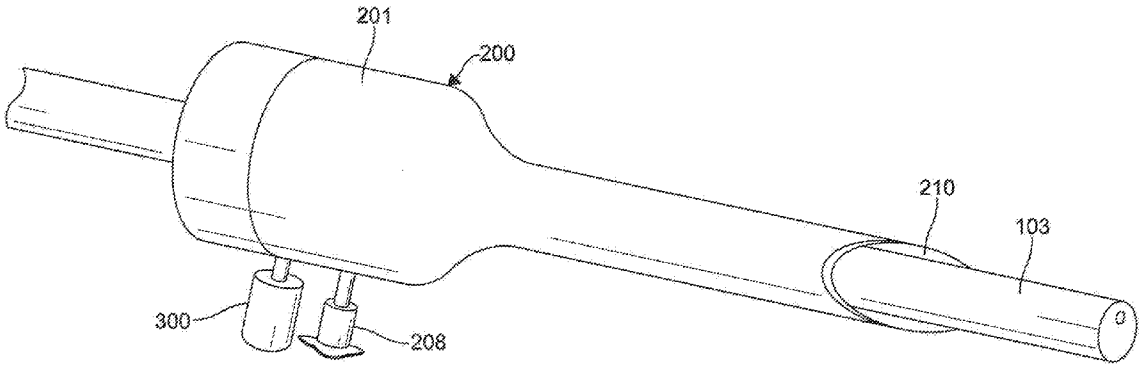

FIG. 2A

(57) Abstract: The disclosure is directed to methods and systems for cleaning scopes using a trocar including a cleaning system. One method comprises utilizing a trocar comprising a main body defining a cavity for receiving an endoscope and a wash orifice disposed in the main body and configured allow a flow of wash solution into the cavity.

WO 2022/235262 A1

INTRAOPERATIVE ENDOSCOPE CLEANING SYSTEM

TECHNICAL FIELD

The present disclosure generally relates to endoscopes, and more particularly to a system and method for maintaining a clean endoscope during a procedure.

BACKGROUND

An endoscope is a medical device utilized for medical procedures requiring the visualization of internal organs in a non-surgical manner generally referred to as a minimally invasive procedure. A physician may utilize an endoscope to make a diagnosis and/or to gain access to internal organs for treatment. The endoscope may be introduced into a patient's body via a natural orifice or through a small surgical incision.

An endoscope generally comprises three systems; namely, the endoscope system, the imaging system and the illumination system. All three systems must work together to give the physician the entire, and clear picture. More specifically, in order to achieve optimal results, the physician must be able to have a clear view from insertion of the endoscope, traveling to the organ site and during the entire procedure. In order to do this, the lens of the endoscope must be maintained free and clear of any obstructing material, including smears, residue, debris and condensation without the need to remove the device from the body. Minimally Invasive Devices, Inc. has developed the FloShield™ system that directs carbon dioxide gas to the tip of the scope to clear the lens from condensation, debris and smoke. CIPHER SURGICAL has developed the OpClear® device which utilizes a gas-powered saline delivery system to clean the scope lens during a procedure.

While the above-referenced devices do function to clean endoscopes, these devices require additional components and are fairly complex in design

and use thereof. For example, these devices comprise additional sleeves which are sized for particular endoscopes. For each endoscope, there is a sleeve and if a physician changes endoscopes during a procedure, which is a common occurrence, a new sleeve must also be utilized. In addition, these devices are fully manual device/systems which required the physician to perform additional steps and thus divert his or her attention from the primary task.

Accordingly, there exists a need for a simple, efficient and easy to utilize system and method for maintaining a clean scope lens and field of view.

SUMMARY

Intraoperative endoscope cleaning systems are disclosed herein. An example intraoperative endoscope cleaning system may comprise a control unit, a wash solution reservoir, a gas supply connected to the control unit and a camera port or trocar. The trocar may be connected to the control unit and the wash solution reservoir and configured for facilitation of an endoscope into a body of a patient and for cleaning the endoscope during use.

The example trocar may comprise a main body, an inlet port, a fluid channel, a cleaning orifice and one or more sensors.

The main body of the trocar may comprise a head portion and an elongate hollow tube portion extending from the head portion and terminating at a distal end of the main body, wherein the tube portion defines a cavity configured to receive an endoscope.

A connector port may be disposed through the head portion of the main body and configured to receive a bulkhead connector. The distal end of the tube portion may comprise a shaped end having edges. For example, the shaped end may comprise a first edge and a second edge opposite the first

edge. The first edge may extend further from the head portion than the second edge.

The inlet port may comprise a single inlet port or a plurality of inlet ports. The inlet port may be disposed through the head portion of the main body and configured to receive a wash solution, a gas or both. The wash solution may comprise a buffered solution comprising a bio-compatible surfactant. The gas may comprise carbon dioxide or other gases. The wash solution and gas may be selectively received or may be received successively. Other materials suitable for cleaning medical devices may be used.

The fluid channel may comprise a single fluid channel or a plurality of fluid channels. The fluid channel may be disposed in or adjacent the tube portion of the main body and in fluid communication with the inlet port to receive the wash solution, the gas or both from the inlet port.

The cleaning orifice may comprise a single cleaning orifice or a plurality of cleaning orifices. The cleaning orifice may be disposed adjacent the distal end of the tube portion of the main body and in fluid communication with the fluid channel to receive the wash solution, the gas, or both from the fluid channel and to allow the wash solution, the gas, or both to flow toward the cavity. The cleaning orifice may be disposed adjacent the first edge. The cleaning orifice may comprise an angled port formed through at least part of the tube portion of the main body. The cleaning orifice may be thin-walled. The cleaning orifice may comprise shaped orifice designs (e.g., circular, oval, rectangular, etc.).

One or more sensors may be disposed on or in the tube portion of the main body between the cleaning orifice and the head portion of the main body. The sensors may be disposed adjacent the fluid channel. The sensors may be configured to sense a position of the endoscope within the cavity. The sensors may comprise a flexible circuit board. The sensors may be self-calibrating. The sensors may be coupled with lenses, as shown in Figures 8A-8F. The sensors

may be in communication with the control unit, i.e., operatively coupled to the control unit. The control unit may be configured to execute one or more cleaning processes (e.g., control delivery of gas or wash solution) in response to feedback (e.g., data) received from the sensors. The execution of the one or more cleaning responses may be automatic. The control unit may be configured to provide ease of use features such as visual and audible feedback to the user to aid in positioning of the endoscope. The one or more cleaning processes may be or comprise a de-fog operation, a priming operation or a wash and dry operation.

The de-fog operation may comprise expelling a burst of gas through the cleaning orifice. The de-fog operation may be triggered as the endoscope is retracted into the tube portion and passes one or more of the sensors, for example the distal-most sensor.

The priming operation may comprise loading an amount of the wash solution into the fluid channel. The priming operation may be triggered as the endoscope is retracted into the tube portion beyond a threshold.

The wash and dry operation may comprise expelling the wash solution from the cleaning orifice. The wash and dry operation may be followed by gas for drying. The wash and dry operation may be two seconds or less.

In some embodiments, the example trocar may comprise a main body comprising an elongate hollow tube portion extending terminating at a distal end, wherein the tube portion defines a cavity configured to receive an endoscope; a wash orifice disposed in the tube portion of the main body and configured to allow the wash solution to flow toward the cavity; a first gas orifice disposed in the tube portion of the main body between the wash orifice and the distal end of the main body, and configured to allow the pressurized gas to flow toward the cavity; and a second gas orifice disposed in the tube portion of the main body adjacent the wash orifice, and configured to allow the pressurized

gas to flow toward the cavity and to atomize at least a portion of the wash solution in the cavity.

In some embodiments, the example trocar may comprise a main body comprising an elongate hollow tube portion extending terminating at a distal end, wherein the tube portion defines a cavity configured to receive an endoscope; a wash orifice disposed in the tube portion of the main body and configured to allow the wash solution to flow toward the cavity; a gas orifice disposed in the tube portion of the main body between the wash orifice and the distal end of the main body, and configured to allow the pressurized gas to flow toward the cavity; and a suction orifice disposed in the tube portion of the main body adjacent the wash orifice and configured to receive fluid from the cavity.

Methods of cleaning endoscopes during procedures utilizing trocars are described herein. An example method may comprise defogging the endoscope, priming the cavity, washing the endoscope, drying the endoscope or combinations thereof. The example method, or certain portions of the example method, may be executed automatically.

In some embodiments, an example method may include utilizing a trocar comprising a main body defining a cavity for receiving an endoscope, a wash orifice disposed in the main body and configured allow a flow of wash solution into the cavity, and a gas orifice disposed between the distal end of the main body and the wash orifice, the gas orifice configured allow a flow of gas into the cavity. The method may include washing the endoscope; drying the endoscope; and managing residual fluids on the endoscope or in the cavity, or both.

An example endoscope cleaning system is described in US 2019/0125176 A1. The present disclosure describes solutions to a variety of problems that arise when the trocar design is reduced to practice and used in real world applications.

BRIEF DESCRIPTION OF THE DRAWINGS

The foregoing and other features and advantages of the disclosure will be apparent from the following, more particular description of embodiments of the disclosure, as illustrated in the accompanying drawings.

Figure 1 is a diagrammatic representation of the endoscopic cleaning system in accordance with the present disclosure.

Figure 2A is a perspective view of a trocar in accordance with the present disclosure.

Figure 2B is a cross-sectional view of the trocar of Figure 2A.

Figure 2C is a diagrammatic representation of a trocar inserted into the body of a patient in accordance with the present disclosure.

Figure 3A is a cross-sectional view of a trocar showing a sensor configuration along line 3A-3A in Figure 3D.

Figure 3B is a cross-sectional view of a trocar showing a lumen configuration along line 3B-3B in Figure 3D.

Figure 3C is a cross-sectional view of a trocar showing a sensor and lumen configuration from Figure 3D.

Figure 3D is a diagrammatic representation of a trocar.

Figures 4A-4E are diagrammatic representations of thin walled orifice designs of a trocar in accordance with the present disclosure.

Figure 5A is a diagrammatic representation of a trocar.

Figure 5B is a cross-section of the trocar of Figure 5A taken along line 5B-5B.

Figure 6 is a diagrammatic representation of a sensor system.

Figures 7A-7B are plots of example sensor settings.

Figures 8A-8F are diagrammatic representations of sensor configurations with Figures 8E-8F including lenses.

Figures 9A-9I are diagrammatic representations of angled endoscopes in accordance with the present disclosure.

Figures 10A-10B are diagrammatic representations of spray orifice designs in accordance with the present disclosure.

Figures 11A-11B are diagrammatic representations of trocar internal graphics in accordance with the present disclosure.

Figure 12 shows diagrammatic representations of trocar internal graphics in accordance with the present disclosure.

Figure 13 is a diagrammatic representation of trocar external graphics in accordance with the present disclosure.

Figure 14 is a flow chart of the process in accordance with the present disclosure.

Figures 15A-15C illustrate an example lumen with features that cause moisture retention

Figures 15D-15F illustrate an example lumen with rounded edges and smooth transition between surfaces to minimize retention of moisture.

Figures 16A-16B are illustrations of an example trocar comprising a gas port (e.g., gas orifice) to atomize wash solution.

Figure 16C is an illustration of an example trocar comprising a gas port (e.g., gas orifice) to atomize wash solution.

Figure 16D is an illustration of an example trocar comprising a plurality of gas ports (e.g., gas orifice) to atomize wash solution.

Figure 16E is an illustration of an example trocar without a recess adjacent the wash orifice and gas orifice.

Figures 17A-17B illustrate example trocars showing residual fluid.

Figures 17C-17D illustrate example trocars comprising raised gas ports to prevent saline washing over the port and the generation of a mist during drying.

Figures 18A-18C illustrates an example problem of residual moisture and the resultant effect on the scope.

Figure 19 illustrates an example trocar comprising physical seals to mitigate against residual moisture.

Figure 20 illustrates an example trocar comprising suction to mitigate against residual moisture.

Figures 21A-21B illustrate an example trocar comprising rear gas pressure to mitigate against residual moisture.

Figure 22 illustrates an example trocar comprising a rear gas seal to mitigate against residual moisture.

Figures 23A-23C illustrate an example trocar comprising vents to mitigate against residual moisture.

Figure 24A-24D illustrate an example trocar comprising drains and ribs to mitigate against residual moisture.

DETAILED DESCRIPTION

The present disclosure provides methods and systems for cleaning endoscopes in-situ. An example device may be integrated into a trocar and comprise a semi-automated washing process. The systems and methods of the present disclosure are suitable for both traditional and robotic medical procedures.

In some embodiments, the present disclosure is directed to methods and systems for cleaning scopes using a trocar (e.g., positioned in a camera port) which has been modified to include a cleaning system. A trocar is a device designed to allow surgical instruments and tools to be quickly and easily inserted into a body cavity (e.g., a body cavity 112 depicted in Figure 1) without contacting the surrounding tissue (e.g., surrounding tissue 110 depicted in Figure 1).

The present disclosure provides functions and features that may be utilized to efficiently and effectively clean an endoscope during a procedure. The cleaning system of the present disclosure utilizes a trocar which allows a user to clean an endoscope during a procedure, e.g., with minimal requirements on the user.

The present disclosure may utilize a trocar with a lumen and orifice. In some embodiments, the lumen can be a single or the only lumen. The lumen and orifice of the present disclosure provides a method of channeling a wash

solution and pressurized gas from a common inlet port through a common lumen to a common spray orifice for the purpose of cleaning an endoscope.

The present disclosure may utilize an endoscope cleaning system comprising a wash solution and pressurized gas. The wash solution and pressurized gas may be utilized in a method of delivering a small volume of wash solution to a spray orifice, atomizing the solution into a transient spray followed by a continuous flow of gas for the purpose of cleaning an endoscope.

The present disclosure includes a method for minimizing and addressing residual moisture on the lens. More specifically, the present disclosure utilizes a method for minimizing residual moisture build-up in a common lumen to prevent the residual moisture compromising the drying portion of the cleaning cycle. Pressurized gas without washing solution may be utilized for drying.

The present disclosure comprises a method for creating a reverse spray angle in a thin-walled device. Methods are described for creating a spray angle that enables the spray direction to be redirected to a greater angle than if using the length of the orifice as the primary means of re-direction.

The present disclosure includes a method for detecting an endoscope using its emitted light. More specifically, the present disclosure utilizes a method of detecting the presence and position of an endoscope using the light emitted from the endoscope for the purpose of automatically triggering the respective step in the cleaning cycle. This eliminates the user having to initiate the process.

The present disclosure also includes a method for automatically calibrating sensors. More specifically, a method for automatically calibrating the sensors during the initial endoscope insertion into the trocar provides for accommodating the variation in endoscope lighting caused by endoscope type, endoscope angle, light source and light brightness for the purpose of achieving a reliable and repeatable cleaning system.

The present disclosure also comprises methods to aid the user in positioning the scope for cleaning. Methods are described for providing audible and visual feedback to the user for the purpose of aiding the user in positioning the endoscope in the optimal position for an effective cleaning cycle.

The present disclosure also comprises controlled spray geometry for addressing the challenges with angled endoscopes. A method and associated system is utilized to control the spray geometry from the cleaning orifice for the purpose of creating a spray pattern that is suited to different endoscope angles.

The present disclosure still further includes methods for improving the sensitivity of the endoscope's sensors to light level and position. A method utilizing different lens designs created in the wall of the trocar may improve the sensitivity at detecting the presence of an endoscope and to improve the sensitivity at the detecting the position of the endoscope.

The present disclosure still further comprises a method for interpolating the endoscope position between sensors for improved user feedback. A method using the analogue output from the endoscope sensors to estimate the scope position will result in a higher resolution than provided by the sensor signal alone for the purpose of providing improved feedback to the user on endoscope position.

Intraoperative endoscope cleaning systems are disclosed herein. An example intraoperative endoscope cleaning system may comprise a control unit, a wash solution reservoir, a gas supply connected to the control unit and a camera port (e.g. a trocar). The trocar may be connected to the control unit and the wash solution reservoir and configured for facilitation of an endoscope into a body of a patient and for cleaning the endoscope during use.

The example trocar may comprise a main body, an inlet port, a fluid channel, a cleaning orifice and one or more sensors.

The main body of the trocar may comprise a head portion and an elongate hollow tube portion extending from the head portion and terminating at a distal end of the main body, wherein the tube portion defines a cavity configured to receive an endoscope.

A connector port may be disposed through the head portion of the main body and configured to receive a bulkhead connector. The distal end of the tube portion may comprise a shaped end having edges. For example, the shaped end may comprise a first edge and a second edge opposite the first edge. The first edge may extend further from the head portion than the second edge.

The inlet port may comprise a single inlet port or a plurality of inlet ports. The inlet port may be disposed through the head portion of the main body and configured to receive a wash solution, a gas or both. The wash solution may comprise a buffered solution comprising a bio-compatible surfactant. The gas may comprise carbon dioxide or other gases. The wash solution and gas may be selectively received or may be received successively. Other materials suitable for cleaning medical devices may be used.

The fluid channel may comprise a single fluid channel or a plurality of fluid channels. The fluid channel may be disposed in or adjacent the tube portion of the main body and in fluid communication with the inlet port to receive the wash solution, the gas or both from the inlet port.

The cleaning orifice may comprise a single cleaning orifice only or a plurality of cleaning orifices. The cleaning orifice may be disposed adjacent the distal end of the tube portion of the main body and in fluid communication with the fluid channel to receive the wash solution, the gas, or both from the fluid channel and to allow the wash solution, the gas, or both to flow toward the cavity. The cleaning orifice may be disposed adjacent the first edge. The cleaning orifice may comprise an angled port formed through at least part of the

tube portion of the main body. The cleaning orifice may be thin-walled. The cleaning orifice may comprise shaped orifice designs.

One or more sensors may be disposed on or in the tube portion of the main body between the cleaning orifice and the head portion of the main body. The sensors may be disposed adjacent the fluid channel. The sensors may be configured to sense a position of the endoscope within the cavity. The sensors may comprise a flexible circuit board. The sensors may be self-calibrating. The sensors may be coupled with lenses. The sensors may be in communication with the control unit. The control unit may be configured to execute one or more cleaning processes in response to feedback received from the sensors. The execution of the one or more cleaning responses may be automatic. The control unit may be configured to provide ease of use features such as visual and audible feedback to the user to aid in positioning of the endoscope. The one or more cleaning processes may be or comprise a de-fog operation, a priming operation or a wash and dry operation.

The de-fog operation may comprise expelling a burst of gas through the cleaning orifice. The de-fog operation may be triggered as the endoscope is retracted into the tube portion and passes one or more of the sensors, for example the distal-most sensor.

The priming operation may comprise loading an amount of the wash solution into the fluid channel. The priming operation may be triggered as the endoscope is retracted into the tube portion beyond a threshold.

The wash and dry operation may comprise expelling the wash solution from the cleaning orifice. The wash and dry operation may be followed by gas for drying. The wash and dry operation may be improved over conventional methods. The wash and dry operation may be five seconds or less, four seconds or less, or three seconds or less. Other times may be achieved.

Methods of cleaning endoscopes during procedures utilizing trocars are described herein. An example method may comprise defogging the endoscope, priming the cavity, washing the endoscope, drying the endoscope or combinations thereof. The example method, or certain portions of the example method, may be executed automatically. Certain procedures may be included or excluded. For example, a method may comprise defogging without priming or washing. Other procedures may be used or customized.

Referring to Figures 1-5B, a cleaning system 100, for example an endoscope cleaning system, of the present disclosure may comprise a trocar 200, a control unit 102, a tubing set 104, a wash solution reservoir 106 and a gas supply 108, for instance a carbon dioxide (CO_2) supply. The trocar 200 may comprise main body having a head portion 201 and a hollow tube portion, such as a scope or instrument lumen 210. The head portion 201 may taper to the scope lumen 210. The head portion 201 may be configured to receive a cap 203. The head portion 201 may comprise one or more ports 208, 300 to couple other devices to the trocar 200. Other configurations may be used. The scope lumen 210 may configured to receive a device or instrument such as an endoscope 103. The trocar 200 may comprise a cleaning lumen 204 (e.g., channel) that may run the length of the trocar 200 (or a portion) and exits through an orifice 206 at or adjacent the distal end thereof. The scope lumen 210 may be configured to pass through body tissue to allow a device such as the endoscope 103 to move through the trocar 200 and into a body cavity (Figure 2C).

A sensing system 300 (e.g., sensing strip depicted in Figure 6) may be disposed in or integrated into the trocar 200 to detect the scope position and provide feedback to the control unit 102. The sensing system 300 may comprise an electrical circuit 302 and one or more sensors 304. As an illustrative example, the sensors 304 may be configured to indicate a position or function. As a further example, sensor 304A may be configured as a “scope present” sensor indicating the presence of a device in the cavity such as an endoscope. Sensor 304B may be configured as a “prime” sensor indicating a

position of the scope that may trigger a priming of the wash solution channel. Sensor 304C may be configured as a "wash" sensor indicating a position of the scope that may trigger a wash process. Other positions and triggers may be used. The electrical circuit 302 may comprise a circuit board such as a flexible circuit board. Other circuits and electrical pathways may be used. The sensing system 300 may comprise a connector 306 such as a bulkhead connector. The control unit 102 may monitor one or more scope sensors 304 and upon detection of the scope 103 may activate a wash cycle, for example, comprising a wash followed by a dry. As a further example, to achieve this, the control unit 102 may prime the lumen 204 with a fixed quantity of wash solution then activate the gas dry. The gas acts as a propellant creating a very brief high energy spray (Figure 3B) out of the orifice 206 and once the wash solution is consumed the gas acts to dry the scope 103. In this way the scope 103 is cleaned intraoperatively (without removal from the patient) and with minimal input from the operator, the operator simply requiring retraction of the scope 103 into the trocar 200.

The washing solution may comprise any suitable biocompatible material, for example, a saline solution. In some embodiments, the washing solution comprises a buffered solution and a surfactant. Carbon dioxide can be a desirable gas to utilize for several reasons, including biocompatibility and the body's ability to absorb the carbon dioxide. The gas may be supplied from a dedicated tank or from the surgical suite supply. The gas may be supplied at a pressure in the range from about 10 to 30 psi, such as, in an embodiment, at about 30 psi.

As shown generally in Figure 1, the control unit 102 is connected to a power supply 101 and the gas supply 108 (e.g., carbon dioxide). The control unit 102 is also connected to the trocar 200 by tubing 104 as well as the wash solution supply reservoir 106. Any number of tubes or conduits may be used to couple various elements to the trocar. The endoscope 103 with camera 105 is shown inserted into the trocar 200.

As an example, a single lumen 204 may be used to direct a wash solution 106 and pressurized gas 108 to an orifice at the distal end of the trocar. As such, the wash solution 106 and the gas 108 may be caused to flow selectively through the lumen 204, for example alternatively through the same single lumen 204 or at the same time.

The sensors 304 may be used to detect the presence of the scope which triggers an automated wash sequence. The wash sequence may comprise the priming of the system with a predetermined or fixed quantity of solution (e.g., about 5 µl to about 50 µl) and, when the sensor is triggered, the pressurized gas may be activated for a predetermined or fixed time period (e.g., about 0.5 to about 5 sec including intervening end points such as about 0.5 to about 1, about 0.5 to about 2, about 0.5 to about 3, about 0.5 to about 4, about 1 to about 2, or about 1 to about 3 secs, and the like.). The gas may serve one or more purposes, for example, as a propellant to atomize the solution into a high-energy spray (which may last e.g., about 0.1 to about 0.5 sec including intervening endpoints) as it exits the orifice, and/or it may act a drying system to remove excess solution from the scope (which may last e.g., about 0.5 to about 5 sec including intervening end points). Other sequences may be used.

As an illustrative example, as shown in Figures 3B and 3C, a cleaning orifice 206 may be disposed adjacent the distal end of the tube portion of the main body of a trocar and in fluid communication with the fluid channel to receive the wash solution, the gas, or both from the fluid channel and to allow the wash solution, the gas, or both to flow toward the cavity. In some embodiments, the orifice 206 can be the only or single cleaning orifice. One or more sensors 304 may be disposed on or in the tube portion of the main body between the cleaning orifice 206 and the head portion of the main body, the one or more sensors 304 configured to sense a position of the endoscope 103 within the cavity. Although various arrangements may be used, the sensors 304 may be disposed inline above or below the cleaning orifice 206 (Figures 5A-5B). Other arrangements include the sensors 304 being arranged along a longitudinal axis in line with the cleaning orifice 206.

The system may be used with minimal input from the operator hence the use of sensors to automatically detect the scope and activate the wash sequence. Other example embodiments of this design replace the sensors with switches which the operator actuates to activate the wash. This design may be further simplified by the operator manually actuating valves to control the solution and gas supply thus removing the controller from the design. It is important to note that any combination of the above may be utilized in accordance with the present disclosure.

In an aspect, the controller may enable both operation of the unit and the level of washing to be defined by the user needs. Multiple modes of operation may be pre-programmed into the controller which may then be selected by the user. For example: if the type of procedure experiences a high rate of fogging then a de-fog only mode may be selected or if there is a large build-up of debris on the scope, for example, caused by the use of energy devices then a deep-clean mode may be activated which delivers a large wash volume to the scope. Figure 14 describes or illustrates this process in flowchart form. Various modes of operation can be envisioned to address different types of cleaning modes in addition to different ways of interacting with the system. For example: some users may find it easier to perform a wash by positioning the scope at the wash sensor and holding the scope at this position while the controller goes through its programmed sequence whereas another user may prefer to control the wash steps, e.g., positioning the scope at the wash sensor triggers a dry only sequence and to trigger a full clean the user has to retract the scope further into the trocar to activate the prime sensor then extend the scope to the wash sensor to perform the full clean.

Other alternate example embodiments of the trocar design are possible to improve the performance of the system.

Examples of specific design considerations are described in the sections below.

Removing or Reducing Moisture

A significant challenge with a cleaning system using sprays is to eliminate or minimize the amount of residual moisture that remains in the scope lumen after the spray has ended. This residual moisture has the potential to contaminate the drying sequence resulting in an incomplete dry (water droplets on the scope lens) thus compromising the cleaning.

Figures 18A-18C illustrate examples of residual moisture. During washing and drying there is a propensity for wash solution 604 and/or other fluids fouling the scope, e.g., blood, to be pushed up the trocar 600 between the scope 602 and the walls of the trocar driven by the spray impingement and the high-pressure drying gas. When the cleaning cycle has ended (e.g., CO_2 gas turned off), the wash solution is under the influence of gravity and when the scope is tilted forward, the solution runs down the scope and can wet the scope window compromising the clean. Another cleaning cycle is then required to dry the scope.

Design of the lumen such as minimizing or reducing the tortuosity of the lumen path and removing the potential areas for solution to collect may reduce the potential for residual moisture, however, it can be difficult to remove completely.

As described with reference to Figures 15A-15F, the lumen is designed and manufactured in such a way to remove any edges or steps in the fluid path which can trap or retain moisture as the wash solution is propelled through the lumen. As shown in Figures 15A-15C, a typical lumen design may allow moisture (designated with *) to get trapped in areas on the lumen. As shown in Figures 15D-15F, a two-piece design may minimize or reduce retention of moisture. As an example, edges may be removed from the fluid path, which may minimize retention or buildup of moisture when compared to a stepped or hard edge design. Such lumen may be created using injection molding, for example. However, other methods may be used.

In some embodiments, the design of the trocar of the present disclosure includes a mode for the purpose of performing a dry only. In this mode when a specific sensor is triggered the system performs a gas dry only. This dry only process can be extremely quick and is effective at removing a light build-up of moisture on the scope face including drops of residual moisture, condensation or blood transfer.

Another example embodiment of the trocar of the present disclosure which is designed to tackle residual moisture is the use of a secondary lumen for gas which would be used only for drying. Switching from the main lumen after washing, e.g., immediately after the majority of the spray has been delivered during washing, would result in a quick and effective dry with the added benefit that the gas pressure could be reduced.

Another solution to addressing residual moisture comprises the use of physical seals within the trocar to compartmentalize the cleaning process. Figure 19 shows an example of such a system. As shown in Figure 19, two seals 702 have been used in the washing zone to prevent wash solution from a) going up into the trocar during washing (e.g., endoscope 703 in wash position) and b) flowing out of the trocar during the drying process (e.g., endoscope 703 in drying position). This configuration can be effective at addressing the problem of residual moisture enabling an effective washing and drying cycle. Lip seals were found to offer the sealing with low stiction. For example, a lip seal 702 may comprise a body 702A disposed in a cavity 701 formed in the wall of the trocar 700. A lip 702B may protrude from the body 702A and may extend toward the endoscope. Various design of seal angles, lip shapes and materials may be used.

Figure 20 shows a solution for addressing residual moisture using a suction port 816 located proximally to a washing port 804. In this embodiment, the suction is activated during washing (e.g., endoscope 803 in wash position) and drying step (e.g., endoscope 803 in dry position) in the cleaning process

and can extract moisture within the trocar 800 and remove the residual moisture 801. This solution allows the suction flow rate to be matched to the gas flow rate such that there is no net effect of the gas flow into the body cavity.

Figures 21A-21B shows a solution for addressing residual moisture using an additional gas port 902B located proximally to the washing port 904. As shown, a gas channel 912 may provide pressurized gas to one or more gas ports 902A, 902B. A fluid channel 910 may provide wash solution to the washing port 904. In this embodiment, the rear gas (e.g., via port 602B) is activated during washing (e.g., endoscope 903 in wash position) and drying (e.g., endoscope 903 in dry position). The rear gas creates a back pressure within the trocar which acts as a barrier preventing the ingress of saline 901 up the trocar 900. In this embodiment, it can be important to tightly control the flow of rear gas, e.g., too low and the gas can be ineffective at preventing saline ingress and too high and the gas can fight against the washing process to blow the spray away from the scope reducing the effectiveness of the wash. This control can be achieved in multiple ways, including controlling the orifice diameter, reducing the diameter to reduce the flow rate and vice versa. An alternative, more flexible solution may use a dedicated lumen supplying this orifice such that the gas pressure and flow rate can be set independently of the gas drying port.

Figure 22 shows a rear gas pressure design. As shown, one or more gas channels 1012, 1018 may provide pressurized gas to one or more gas ports 1002, 1016. A fluid channel 1010 may provide wash solution to the washing port 1004. In this embodiment, a reduction in the internal diameter of the trocar 1000 is created and the rear gas port 1016 is created in a groove such that within this location the gas flow distally is higher than proximally. In this manner, a gas seal can be created to prevent saline ingress using low gas flow rates and low pressures such that the saline does not compromise the effectiveness of the saline wash. In this embodiment, the rear gas (e.g., via port 716) may be activated during washing (e.g., endoscope 703 in wash position) and drying (e.g., endoscope 703 in dry position).

Figures 23A-23C show an additional or alternative approach to dealing with residual moisture 1101. As shown, a gas channel 1112 may provide pressurized gas to one or more gas ports 1102. A fluid channel 1110 may provide wash solution to the washing port 1104. As shown, vents 1116 are created proximally in the trocar 1100 to allow any wash solution and gas that passes beyond the scope 1103 to be vented into the body cavity, thus when the drying gas is turned off at the end of the drying step there is minimal moisture remaining in the trocar.

Figures 24A-24D show an additional or alternative approach to dealing with residual moisture 1201. As shown, a gas channel 1212 may provide pressurized gas to one or more gas ports 1202. A fluid channel 1210 may provide wash solution to the washing port 1204. Drains 1216 are created at the distal end of the trocar 1200. These are designed to allow any residual moisture 1201 within the trocar 1200 to drain out of the trocar 1200 rather than run down the length of the scope 1203 to wet the scope lens. It may be beneficial that the scope 1203 is prevented from coming into contact with the walls of the trocar 1200 as this increases the likelihood of wash wicking between the trocar 1200 and scope 1203. To prevent this, ribs 1218 are created axially within the inner surface of the trocar 1200 to position the scope 1203 centrally within the trocar 1200, thus creating channels that can direct the residual moisture 1201 to the drains 1216.

Reducing Outer Diameter of Trocar

There is a desire to keep the outer diameter of a trocar small to minimize or reduce the size of the incision in the patient as larger incisions are known to be associated with increased pain and a higher risk of hernia. A challenge with the trocar design of the present disclosure is how to implement the lumen and orifice with minimal impact on the outer diameter of the trocar.

As shown in Figures 4A-4E, the orifice 206 may be angled to face the scope or other instrument, e.g., extends proximally at an angle relative to the cleaning lumen to at least partially face a distal end of the scope or other instrument (e.g. a lens of the scope). As an example, the direction of the lumen 204 and/or 206 may be arranged such that the output angle of fluid from the orifice is greater than about 90° (typically about 110° to about 170°) relative to the longitudinal axis of the lumen 204 connecting to the orifice. Other angles and arrangements may be used, as illustrated in Figures 4C-4E. To create such a reorientation may require that the length of the orifice to be greater than or equal to the diameter of the orifice. As shown in Figure 4A, certain arrangements may benefit from a thickness T1 that is greater than a respective outside diameter of the orifice 206. For a typical orifice diameter of about 1.0 mm to about 1.6 mm, this adds thickness to the trocar. If the wall thickness is less than the length of the orifice, then the extent of reorientation can be significantly reduced.

To achieve a thinner trocar wall, the design of the present disclosure utilizes two different techniques. In the first technique as shown in Figures 4C, 4D and 4E, the circular x-section of the trocar is maintained, the scope lumen is positioned eccentric to the center of the trocar. The cleaning lumen is located within the thickest part of the trocar wall. As the lumen 204' approaches the distal end of the trocar it is reversed in direction before existing through the orifice. Using this approach, the orifice 206' requires redirection of the spray to be less than about 90° (typically about 20° to about 70°) meaning that the wall thickness may be less than the orifice diameter as shown in Figure 4C where T2 is less than the respective outside diameter of the orifice. In the second technique the scope lumen is kept concentric with the outer diameter and the outer diameter of the trocar is locally thickened to create a rib running the length of the trocar. The cleaning lumen and sensor strip are positioned within this rib in stacked configuration with the sensor strip positioned between the inner wall of the trocar and the cleaning lumen. This separation naturally creates the required length for the orifice to direct the spray.

Positioning of Scope

One aspect of the system design is the ability to reliably detect the position of the scope within the trocar given the sources of variation in the different types of scopes commercially available, e.g., scopes are available from arrange of different manufacturers, in different specifications such as viewing angle and light pattern and the use of different lighting sources such as halogen or LED.

One embodiment uses light receptive sensors to detect the emitted light from the scope which provide an analogue output in response to the level of light incident upon the sensor. Other types of sensors considered include photo-reflective, through-beam and inductive proximity. The light receptive sensors provide advantages in terms of low package size, low cost and simplicity.

To account for the variation in sensors and the different levels of light (e.g., pattern and brightness) from different scopes, it is beneficial to calibrate the system on first use. To achieve this, the control unit monitors incident light on the first scope insertion and based upon the peak level measured from the sensor one can apply a calibration factor to normalize the sensors signal or adjust the trigger threshold to set the voltage at which each sensor triggers, e.g., using a pre-defined formula such as given by:

Threshold = 80% x Peak Voltage.

In addition to using a dynamic threshold to account for variation, one can also use the different transitions of the sensor to suit a particular purpose. For example, when one wants to detect the presence of a scope one can apply a low threshold to the sensor signal which provides a sensitive signal of scope presence; however, where one wants to detect when a sensor has reached a position, one can use the “off” transition, i.e., when the scope has passed the sensor and the light is cut off.

In one embodiment, the sensors are located on the dry side of the trocar (behind the inner wall of the trocar) for isolation from the fouling material and wash solution thus the trocar wall is manufactured from a transparent material such as, for example, polycarbonate or polypropylene. It is then possible to feature the wall of the trocar to create lenses to either capture additional light (radially and axially) improving the sensitivity of the sensors or to improve the positional sensitivity of the sensors by capturing light preferentially in the radial axis. Both techniques are useful in the trocar design, e.g., the purpose of the 'scope present' sensor is to detect a scope so benefits from a lens to capture more light and the 'wash' sensor is to trigger a wash at a precise location so benefits from a shaped lens.

One aspect of the system design is providing feedback to the user to help the user position the scope in the right position for cleaning. The sensors ensure that the wash cycle is triggered at predetermined times, however, because the scope positioning is manual, there exists opportunity for the user to stop the scope outside of the optimal position. In this case, it is possible that the wash efficacy can be compromised, e.g., the scope is out of position such that it covers the wash port then no washing will occur. To aid the user to target this position reliably, it is beneficial to provide feedback such that the user can get close to the approximate position then locate the optimal position, e.g., allow the user to quickly retract the scope and be alerted that they are close to the wash position, thereby allowing them to slow the scope movement in preparation for stopping.

One solution to this is audible feedback or visual feedback, e.g., flashing lights on the control unit or a positional indicator overlaid on the scope display.

The current trocar sensors may be used to give a coarse or approximate estimate of position, e.g., warning sensor to give an alert that about to reach wash position followed by the wash position sensor altering the user to stop. Due to the analogue nature of the sensors, it is possible to interpolate the

actual position of the sensor which provides a finer (e.g., higher resolution) estimate of position. This information can be used to provide improved feedback to the user. For example, this positional information may be used to vary the tone of an audible signal or change the rate of beeping (like the reverse sensor in an automobile), thus providing a continuously variable feedback to the user until they reach the target position.

For an effective cleaning cycle, it has been found that a suitable position for washing and drying is at the distal end of the trocar. In this position, the debris from the washing and drying process may be effectively expelled from the trocar. This prevents the build-up of debris within the trocar which can cause refouling of a clean scope and makes the scope drying process more efficient due to the minimal wash solution remaining after a wash.

De-Fogging

One aspect of the trocar of the present disclosure uses an initial burst of gas (e.g., in a de-fog mode) to clean the scope. This burst of gas has been shown to be highly effective at cleaning scopes when the fouling material doesn't leave a film on the surface of the scope, such as condensation, splashing from irrigation solution, blood, etc. For other types of fouling, this burst of gas is highly effective at removing a significant amount (e.g., the bulk or majority) of the foulant from the scope which makes the subsequent wash process easier and more efficient.

One aspect of the system design may comprise providing an easy to use device that does not require the user to press any buttons for the process of calibration, scope insertion or cleaning cycle. In some embodiments of the present system, the trocar comprises a "present" sensor (Figures 7A-7B) for the purpose of detecting the initial insertion of the scope. Other devices and systems may be used.

By monitoring the rate of change in the sensor signal, the control unit may determine if the scope is being inserted into the trocar or being removed.

For example, if the sensor signal is increasing then it can be determined that the scope is being inserted and if the sensor signal is decreasing then it can be determine that the scope is being removed.

By using this sensor, the system may disable the washing cycle when the scope is first inserted into the trocar and perform a different function such as, for example, the calibration sequence detailed earlier. And conversely, the system may use this sensor input to disable the washing cycle when a scope is being removed from the trocar, e.g., when the user is changing the scope type which is a common occurrence during a procedure.

Different Viewing Angles of Scopes

In some embodiments, the system may be used with scopes with different viewing angles (Figures 9A-9I). The variation in scope angle can pose a challenge for the design of the system when only using one cleaning orifice because the relationship between the cleaning orifice and the scope face to be cleaned can change significantly.

One solution to this challenge is the use of a plurality of orifices arranged circumferentially within the trocar providing effective washing irrespective of the scope rotation; however, this adds complexity to the design of the trocar and potentially an increase in the consumption of wash solution and gas. It is therefore desirable to have a design that retains the simplicity of a single orifice trocar while providing an effective wash.

There are at least two challenges with angled scopes: 1) the relationship between the scope face to be cleaned and the fixed orifice changes and 2) the angled scopes are asymmetric meaning that if the scopes are rotated the relationship between the scope face and the orifice changes. These challenges are described in Figures 9A-9I. Figures 9A-9D show a typical range of scope angles commercially available. Figure 9E demonstrates that when the orifice is positioned for the optimal relationship for a 0° scope, then the positioning is

compromised for an angled scope. Figure 9F shows the inverse situation where the orifice is positioned to suit a 45° scope and the relationship to the 0° scope is compromised.

The angled scopes pose the additional challenge in that as they are rotated within the trocar, the orientation of the scope face (to be cleaned) to the orifice changes. Figure 9G shows the scope with the orifice directly aligned to the scope suitable for cleaning, whereas Figure 9H shows the scope in an orientation which, in this example, the orifice does not impinge on the scope which can cause the scope clean to be ineffective. Figure 9I shows an interim case between the orientations shown in Figures 9G and 9H, where the scope is rotated mid-way between the two orientations, to help visualize the decrease in cleaning efficacy expected as the scope is rotated angle changes.

To address these problems, the trocar may comprise the following features: the spray orifice geometry (Figures 10A-10B) is changed to create a shaped spray which spreads the spray out over a large area to accommodate the differences between the scopes, e.g., by using a rectangular or elliptical orifice, the spray pattern can be flattened from a cone to a fan.

One solution to the rotation of the scopes is to ask the user to twist or rotate the scope to a suitable position for washing at the same time that the scope is retracted into the trocar for washing. To aid this process, graphics 212 can be printed onto the exterior of the trocar (see Figure 13) to give the user a visual cue to alignment.

The interior of the trocar (Figures 11A-12) is featured to provide visual indication of position such that if the user has adequate visibility (or if visibility improves during the washing sequence) the user can see this target allowing the user to adjust the position of the scope for optimal cleaning. These features can be markings 214 that are embossed or printed onto the surface of the trocar or can be incorporated into the body of the trocar such a way that the features 216 reflect the light from the scope to provide a highly visible target.

In some embodiments, multiple orifice designs to create multi-directional sprays useful for scopes with angled faces or featured faces and use of small branches from the main lumen (which have built-in restrictions to reduce the flow) to provide multiple drying ports to improve the ability of the system to dry angled of featured scope faces.

Ensuring Spray of the Wash Solution

In some embodiments, the present disclosure is directed to a method and system for improving the efficiency of the spray at cleaning the scope. In existing systems, a spray can be created by delivering pressurized saline through an orifice. At low saline flow rates, the spray energy reduces significantly to the point that the saline flows out of the nozzle in a stream rather than a spray. To overcome this and to enable the use of low flow rates the pressure of the saline can be increased, and the orifice diameter reduced, however this adds complication to the system.

Figures 16A-16B illustrate an example trocar 400 for an intraoperative endoscope cleaning system. As shown, the trocar 400 may comprise a main body having an elongate hollow tube portion extending terminating at a distal end. The tube portion defines a cavity configured to receive an endoscope 414. A gas inlet port may be disposed through the main body and configured to selectively receive a pressurized gas (e.g., CO_2). A fluid inlet port may be disposed through the main body and configured to selectively receive a wash solution. A wash orifice 404 may be disposed in the tube portion of the main body and in fluid communication with the fluid inlet port to receive the wash solution and to allow the wash solution to flow toward the cavity. A first gas orifice 402 may be disposed in the tube portion of the main body between the wash orifice 404 and the distal end of the main body, and in fluid communication with the gas inlet port to receive the pressurized and to allow the pressurized gas to flow toward the cavity. A second gas orifice 406 may be disposed in the tube portion of the main body adjacent the wash orifice 404,

and in fluid communication with the gas inlet port to receive the pressurized gas and to allow the pressurized gas to flow toward the cavity and to atomize at least a portion of the wash solution in the cavity. A fluid channel or wash channel 410 may be coupled between the fluid inlet port and the wash orifice 404 to provide fluid communication therebetween. A fluid channel or gas channel 412 (e.g., a gas lumen) may be coupled between the gas inlet port and one or more of the first gas orifice 402 or the second gas orifice 406 to provide fluid communication therebetween.

Additionally or alternatively, and for the example purpose of controlling the delivery of the wash solution from the wash orifice 404 to the second gas orifice 406, there can be a recess or channel 408 connecting both ports 404, 406. In this way, the solution from the wash orifice 404 is preferentially channeled to the gas orifice 406 for atomization into a spray. As shown in Figure 16E, however, the trocar need not include the recess 408 shown in Figure 16A.

In use, the endoscope 414A may be in a wash position and may be subjected to a spray of wash solution 405, which may be at least partially atomized by flow of gas 407. The endoscope 414B may be in a drying position and may be subjected to a burst of gas 403 for drying.

As shown in Figure 16C, the wash channel 410 may be coupled between the fluid inlet port and the wash orifice 404 to provide fluid communication therebetween and the gas channel 412 may be coupled between the gas inlet port and one or more of the first gas orifice 402 or the second gas orifice 406 to provide fluid communication therebetween, wherein at least a portion of the gas channel 412 is parallel to a portion of the wash channel 410. The recess 408 may have various shapes and may be formed adjacent or about one or more of the orifices 404, 406.

Alternatively, as shown in Figure 16D, the wash channel 410 may be coupled between the fluid inlet port and the wash orifice 404 to provide fluid

communication therebetween and a gas channel 412' may be coupled between the gas inlet port and one or more of a first gas orifice 402' or the second gas orifices 406A, 406B, 406C to provide fluid communication therebetween, wherein at least a portion of the gas channel 412' is shaped to surround at least a portion of the wash channel 410. The plurality of gas orifices (ports) 406A, 406B, 406C may be disposed adjacent the wash orifice 404.

The gas orifices 406, 406A, 406B, 406C may be connected to the drying gas fluid channels 412, 412' to receive a flow of pressurized gas, for example. If a gas drying port 402 is activated concurrently with a wash solution (e.g., saline, buffered biocompatible solution, etc.) flow, the additional gas port(s) 406, 406A, 406B, 406C may be highly effective at atomizing the wash solution into an energetic spray. This offers a practical solution to creating energetic sprays at low saline pressures and flow rates. Another embodiment of this design uses a dedicated gas channel independent of the existing gas channel design. This has multiple benefits as the gas can be activated independently of the drying gas and be configured for the optimal gas pressure and flow rate to improve the spray, however, this can come at an increase in the complexity of the system.

It has been observed that wash spray can coalesce inside a trocar and has the potential to flow over the lower gas port. This typically occurs at the end of the washing cycle and thus the solutions flows over the gas drying port during the drying process resulting in a spray. In some embodiments described herein, the wash solution can coalesce inside the trocar and flow past the gas port during drying. This causes a spray which can compromise the drying stage of the clean as the CO_2 gas has to run for an extended period to remove all the saline wash before the gas can effectively dry the scope.

In the present disclosure, a solution to the problem is detailed which prevents or reduces saline within the trocar from being atomized during drying. Figures 17A-17D illustrate an example trocar 500 for an intraoperative endoscope cleaning system. As shown, the trocar 500 may comprise a main

body having an elongate hollow tube portion extending terminating at a distal end. The tube portion defines a cavity configured to receive an endoscope. A wash orifice 504 may be disposed in the tube portion of the main body. A gas orifice 502 may be disposed in the tube portion of the main body between the wash orifice 504 and the distal end of the main body. A fluid channel 510 may be coupled between the fluid inlet port and the wash orifice 504 to provide fluid communication therebetween. A fluid channel 512 may be coupled between the gas inlet port and one or more of the gas orifice 502 to provide fluid communication therebetween. The gas orifice 502 may have a raised elevation 524 relative to a surface 522 of the main body defining the cavity to prevent residual fluid 501 such as wash solution from washing up on to the gas orifice 502. Alternatively or additionally, as depicted in FIG. 17D, channels 520 may be disposed adjacent the gas orifice 502 to divert the wash solution away from the gas orifice 502. Additionally or alternatively, a hydrophobic coating may be applied to the gas orifice 502 area to prevent wash from wicking up onto the gas orifice 502 and the gas inlet port.

Further Embodiments of the Invention

Other subject matter contemplated by the present disclosure is set out in the following numbered embodiments:

1. A trocar for an intraoperative endoscope cleaning system, the trocar comprising:

a main body comprising a head portion and an elongate hollow tube portion extending from the head portion and terminating at a distal end, wherein the tube portion defines a cavity configured to receive an endoscope;

a single inlet port disposed through the head portion of the main body and configured to selectively receive a wash solution, a gas, or both;

a single fluid channel disposed in or adjacent the tube portion of the main body and in fluid communication with the inlet port to receive the wash solution, the gas, or both from the inlet port;

a single cleaning orifice disposed adjacent the distal end of the tube portion of the main body and in fluid communication with the fluid channel to receive the wash solution, the gas, or both from the fluid channel and to allow the wash solution, the gas, or both to flow toward the cavity; and

one or more sensors disposed on or in the tube portion of the main body between the cleaning orifice and the head portion of the main body, the one or more sensors configured to sense a position of the endoscope within the cavity.

2. The trocar of embodiment 1, wherein the distal end of the tube portion of the main body comprises a shaped end having a first edge and a second edge opposite the first edge, wherein the first edge extends further from the head portion than the second edge.

3. The trocar of embodiment 2, wherein the cleaning orifice is disposed adjacent the first edge.

4. The trocar of embodiment 3, wherein the cleaning orifice comprises an angled port formed through at least part of the tube portion of the main body.

5. The trocar of embodiment 1, wherein the single cleaning orifice comprises a thin-walled orifice.

6. The trocar of embodiment 1, wherein the single cleaning orifice comprises a shaped orifice design.

7. The trocar of embodiment 1, wherein the cleaning orifice comprises an angled port formed through at least part of the tube portion of the main body.

8. The trocar of embodiment 1, wherein the one or more sensors are disposed adjacent the fluid channel.

9. The trocar of embodiment 1, wherein the one or more sensors comprise a flexible circuit board.

10. The trocar of embodiment 1, wherein the one or more sensors are self-calibrating.

11. The trocar of embodiment 1, further comprising one or more lens coupled with the one or more sensors.

12. The trocar of embodiment 1, further comprising a connector port disposed through the head portion of the main body and configured to receive a bulkhead connector.

13. The trocar of embodiment 1, wherein an interior wall defining the fluid channel comprises smooth, unstopped edges.

14. A trocar for an intraoperative endoscope cleaning system, the trocar comprising:

a main body comprising a head portion and an elongate hollow tube portion extending from the head portion and terminating at a distal end, wherein the tube portion defines a cavity configured to receive an endoscope;

an inlet port disposed through the head portion of the main body and configured to alternatively receive a wash solution and a dry gas;

a fluid channel disposed in or adjacent the tube portion of the main body and in fluid communication with the inlet port to alternatively receive the wash solution and the dry gas from the inlet port;

a cleaning orifice disposed adjacent the distal end of the tube portion of the main body and in fluid communication with the fluid channel to alternatively receive the wash solution and the dry gas and to allow the wash solution and the dry gas to flow toward the cavity; and

one or more sensors disposed on or in the tube portion of the main body

between the cleaning orifice and the head portion of the main body, the one or more sensors configured to sense a position of the endoscope within the cavity.

15. The trocar of embodiment 14, wherein the distal end of the tube portion of the main body comprises an angled end having a first edge and a second edge opposite the first edge, wherein the first edge extends further from the head portion than the second edge, and, wherein the cleaning orifice is disposed adjacent the first edge.

16. The trocar of embodiment 15, wherein the cleaning orifice comprises an angled port formed through at least part of the tube portion of the main body.

17. The trocar of embodiment 14, wherein the cleaning orifice comprises a thin-walled orifice.

18. The trocar of embodiment 14, wherein the cleaning orifice comprises a shaped orifice design.

19. The trocar of embodiment 14, wherein the cleaning orifice comprises an angled port formed through at least part of the tube portion of the main body.

20. The trocar of embodiment 14, wherein the one or more sensors are disposed adjacent the fluid channel.

21. The trocar of embodiment 14, wherein the one or more sensors comprise a flexible circuit board.

22. The trocar of embodiment 14, wherein the one or more sensors are self-calibrating.

23. The trocar of embodiment 14, further comprising one or more lenses coupled with the one or more sensors.

24. The trocar of embodiment 14, further comprising a connector port disposed through the head portion of the main body and configured to receive a bulkhead connector.

25. The trocar of embodiment 14, wherein an interior wall defining the fluid channel comprises smooth, unstopped edges.

26. An intraoperative endoscope cleaning system comprising:

a control unit;

a wash solution reservoir;

a gas supply connected to the control unit; and

a trocar connected to the control unit and the wash solution reservoir, wherein the trocar is configured for facilitation of an endoscope into a body of a patient and for cleaning the endoscope during use,

the trocar further comprising:

a main body comprising a head portion and an elongate hollow tube portion extending from the head portion and terminating at a distal end, wherein the tube portion defines a cavity configured to receive an endoscope;

a single inlet port disposed through the head portion of the main body and configured to selectively receive a wash solution from the wash solution reservoir, a gas from the gas supply, or both;

a single fluid channel disposed in or adjacent the tube portion of the main body and in fluid communication with the inlet port to receive the wash solution, the gas, or both from the inlet port;

a single cleaning orifice disposed adjacent the distal end of the tube portion of the main body and in fluid communication with the fluid channel to receive the wash solution, the gas, or both from the fluid channel and to allow the wash solution, the gas, or both to flow toward the cavity; and

one or more sensors disposed on or in the tube portion of the main body

between the cleaning orifice and the head portion of the main body, the one or more sensors configured to sense a position of the endoscope within the cavity.

27. The system of embodiment 26, wherein the distal end of the tube portion of the main body comprises an angled end having a first edge and a second edge opposite the first edge, wherein the first edge extends further from the head portion than the second edge.

28. The system of embodiment 27, wherein the cleaning orifice is disposed adjacent the first edge.

29. The system of embodiment 28, wherein the cleaning orifice comprises an angled port formed through at least part of the tube portion of the main body.

30. The system of embodiment 26, wherein the cleaning orifice comprises a thin-walled orifice.

31. The system of embodiment 26, wherein the cleaning orifice comprises a shaped orifice design.

32. The system of embodiment 26, wherein the cleaning orifice comprises an angled port formed through at least part of the tube portion of the main body.

33. The system of embodiment 26, wherein the one or more sensors are disposed adjacent the fluid channel.

34. The system of embodiment 26, wherein the one or more sensors comprise a flexible circuit board.

35. The trocar of embodiment 26, wherein the one or more sensors are self-calibrating.

36. The trocar of embodiment 26, further comprising one or more lens coupled with the one or more sensors.

37. The system of embodiment 26, further comprising a connector port disposed through the head portion of the main body and configured to receive a bulkhead connector.

38. The system of embodiment 26, where the gas comprises carbon dioxide.

39. The system of embodiment 26, wherein the wash solution comprises a buffered solution comprising a bio-compatible surfactant.

40. The system of embodiment 26, wherein the one or more sensors are in communication with the control unit, and wherein the control unit is configured to execute one or more cleaning processes in response to feedback received from the one or more sensors.

41. The system of embodiment 40, wherein the control unit is further configured to provide visual or audible feedback in relation to the position of the endoscope.

42. The system of embodiment 40, wherein the one or more cleaning processes comprises a de-fog operation.

43. The system of embodiment 42, wherein the de-fog operation comprises expelling a burst of gas through the cleaning orifice.

44. The system of embodiment 43, wherein the de-fog operation is triggered as the endoscope is retracted into the tube portion and passes a distal-most sensor of the one or more sensors.

45. The system of embodiment 40, wherein the one or more cleaning processes comprises a priming operation.

46. The system of embodiment 45, wherein the priming operation comprises loading an amount of the wash solution into the fluid channel.

47. The system of embodiment 45, wherein the priming operation is triggered as the endoscope is retracted into the tube portion beyond a threshold.

48. The system of embodiment 40, wherein the one or more cleaning processes comprises a wash and dry operation.

49. The system of embodiment 48, wherein the wash and dry operation comprises expelling the wash solution from the cleaning orifice followed by the gas for drying.

50. The system of embodiment 49, wherein the wash and dry operation is less than five seconds.

51. The system of embodiment 26, wherein the one or more sensors are in communication with the control unit, and wherein the control unit is configured to automatically execute one or more cleaning processes in response to feedback received from the one or more sensors.

52. The system of embodiment 51, wherein the control unit is further configured to provide visual or audible feedback in relation to the position of the endoscope.

53. A method for cleaning an endoscope during a procedure, the method comprising utilizing a trocar comprising a main body defining a cavity for receiving an endoscope, a single cleaning orifice disposed adjacent a distal end of the main body and in fluid communication with a fluid channel to receive a wash solution, a dry gas, or both from the fluid channel, and one or more sensors disposed on or in the main to sense a position of the endoscope, the method comprising:

priming the cavity;

washing the endoscope; and

drying the endoscope.

54. The method of embodiment 53, further comprising defogging the endoscope, wherein the defogging comprises expelling a burst of gas through the cleaning orifice.

55. The method of embodiment 54, wherein the defogging is triggered as the endoscope is retracted into the main body and passes a distal-most sensor of the one or more sensors.

56. The method of embodiment 53, wherein the one or more sensors are self-calibrating.

57. The method of embodiment 53, further comprising one or more lenses coupled with the one or more sensors.

58. The method of embodiment 53, wherein the priming comprises expelling an amount of wash solution through the cleaning orifice.

59. The method of embodiment 53, wherein the priming is triggered as the endoscope is retracted into the main body beyond a threshold.

60. The method of embodiment 53, wherein one or more of the defogging, priming, washing, and drying is executed automatically.

61. A method for cleaning an endoscope during a procedure, the method comprising defogging an endoscope utilizing a trocar comprising a main body defining a cavity for receiving an endoscope, a single cleaning orifice disposed adjacent a distal end of the main body and in fluid communication with a fluid channel to receive a wash solution, a dry gas, or both from the fluid channel, and one or more sensors disposed on or in the main to sense a position of the endoscope.

62. The method of embodiment 61, wherein the defogging comprises expelling a burst of gas through the cleaning orifice.

63. The method of embodiment 62, wherein the defogging is triggered as the endoscope is retracted into the main body and passes a distal-most sensor of the one or more sensors.

64. The method of embodiment 61, wherein the one or more sensors are self-calibrating.

65. The method of embodiment 61, further comprising one or more lenses coupled with the one or more sensors.

66. A trocar for an intraoperative endoscope cleaning system, the trocar comprising:

a main body comprising an elongate hollow tube portion extending terminating at a distal end, wherein the tube portion defines a cavity configured to receive an endoscope;

a wash orifice disposed in the tube portion of the main body and configured to allow the wash solution to flow toward the cavity;

a first gas orifice disposed in the tube portion of the main body between the wash orifice and the distal end of the main body, and configured to allow the pressurized gas to flow toward the cavity; and

a second gas orifice disposed in the tube portion of the main body adjacent the wash orifice and configured to allow the pressurized gas to flow toward the cavity and to atomize at least a portion of the wash solution in the cavity.

67. The trocar of embodiment 66, further comprising a fluid channel coupled between the fluid inlet port and the wash orifice to provide fluid communication therebetween.

68. The trocar of embodiment 66, further comprising a fluid channel coupled between the gas inlet port and one or more of the first gas orifice or the second gas orifice to provide fluid communication therebetween.

69. The trocar of embodiment 66, further comprising a wash channel coupled between the fluid inlet port and the wash orifice to provide fluid communication therebetween and a gas channel coupled between the gas inlet port and one or more of the first gas orifice or the second gas orifice to provide fluid communication therebetween, wherein at least a portion of the gas channel is parallel to a portion of the wash channel.

70. The trocar of embodiment 66, further comprising a wash channel coupled between the fluid inlet port and the wash orifice to provide fluid communication therebetween and a gas channel coupled between the gas inlet port and one or more of the first gas orifice or the second gas orifice to provide fluid communication therebetween, wherein at least a portion of the gas channel is shaped to surround at least a portion of the wash channel.

71. The trocar of embodiment 70, further comprising one or more third gas orifices disposed in communication with the gas channel.

72. The trocar of embodiment 66, wherein the first gas orifice comprises a raised elevation relative to an adjacent portion of a wall of the main body.

73. The trocar of embodiment 66, further comprising a channel formed adjacent the first gas orifice and configured to direct fluids away from the first gas orifice.

74. The trocar of embodiment 66, wherein the distal end of the tube portion of the main body comprises a shaped end having a first edge and a second edge opposite the first edge, wherein the first edge extends further from the head portion than the second edge.

75. The trocar of embodiment 66, wherein the wash orifice comprises an angled port formed through at least part of the tube portion of the main body.

76. The trocar of embodiment 66, wherein one or more of the first gas orifice or the second gas orifice comprises an angled port formed through at least part of the tube portion of the main body.

77. The trocar of embodiment 66, further comprising one or more seals disposed adjacent the cavity and configured to seal against a portion of the endoscope while the endoscope is disposed in the cavity.

78. The trocar of embodiment 77, wherein the one or more seals comprise a lip seal.

79. The trocar of embodiment 77, wherein the one or more seals are disposed between the first gas orifice and the wash orifice.

80. The trocar of embodiment 77, wherein the one or more seals are disposed adjacent the wash orifice and spaced from the first gas orifice.

81. The trocar of embodiment 66, wherein the second gas orifice is configured to cause a higher gas flow distally than the gas flow proximally.

82. The trocar of embodiment 66, further comprising one or more vent apertures formed through the main body.

83. The trocar of embodiment 82, further comprising a protrusion formed on the main body and extending inwardly into the cavity, wherein the protrusion is disposed adjacent the one or more vent apertures.

84. An intraoperative endoscope cleaning system comprising:
the trocar of embodiment 66;
a control unit configured to control a flow of fluid to the trocar;
a wash solution reservoir in fluid communication with the wash orifice; and
a gas supply in fluid communication with one or more of the first gas orifice or the second gas orifice.

85. A trocar for an intraoperative endoscope cleaning system, the trocar comprising:
a main body comprising an elongate hollow tube portion extending terminating at a distal end, wherein the tube portion defines a cavity configured to receive an endoscope;
a wash orifice disposed in the tube portion of the main body and configured to allow the wash solution to flow toward the cavity;
a gas orifice disposed in the tube portion of the main body between the wash orifice and the distal end of the main body, and configured to allow the pressurized gas to flow toward the cavity; and

a suction orifice disposed in the tube portion of the main body adjacent the wash orifice and configured to receive fluid from the cavity.

86. The trocar of embodiment 85, further comprising a fluid channel coupled between the fluid inlet port and the wash orifice to provide fluid communication therebetween.

87. The trocar of embodiment 85, further comprising a fluid channel coupled between the gas inlet port and first gas orifice to provide fluid communication therebetween.

88. The trocar of embodiment 85, further comprising a wash channel coupled between the fluid inlet port and the wash orifice to provide fluid communication therebetween and a gas channel coupled between the gas inlet port and the gas to provide fluid communication therebetween, wherein at least a portion of the gas channel is parallel to a portion of the wash channel.

89. The trocar of embodiment 85, wherein the gas orifice comprises a raised elevation relative to an adjacent portion of a wall of the main body.

90. The trocar of embodiment 85, further comprising a channel formed adjacent the first gas orifice and configured to direct fluids away from the gas orifice.

91. The trocar of embodiment 85, wherein the distal end of the tube portion of the main body comprises a shaped end having a first edge and a second edge opposite the first edge, wherein the first edge extends further from the head portion than the second edge.

92. The trocar of embodiment 85, wherein the wash orifice comprises an angled port formed through at least part of the tube portion of the main body.

93. The trocar of embodiment 85, wherein the first gas orifice comprises an angled port formed through at least part of the tube portion of the main body.

94. The trocar of embodiment 85, further comprising one or more seals disposed adjacent the cavity and configured to seal against a portion of the endoscope while the endoscope is disposed in the cavity.

95. The trocar of embodiment 94, wherein the one or more seals comprise a lip seal.

96. The trocar of embodiment 94, wherein the one or more seals are disposed between the gas orifice and the wash orifice.

97. The trocar of embodiment 94, wherein the one or more seals are disposed adjacent the wash orifice and spaced from the gas orifice.

98. The trocar of embodiment 85, further comprising one or more vent apertures formed through the main body.

99. The trocar of embodiment 98, further comprising a protrusion formed on the main body and extending inwardly into the cavity, wherein the protrusion is disposed adjacent the one or more vent apertures.

100. An intraoperative endoscope cleaning system comprising:
the trocar of embodiment 20;
a control unit configured to control a flow of fluid to the trocar;
a wash solution reservoir in fluid communication with the wash orifice; and
a gas supply in fluid communication with one or more of the first gas orifice or the second gas orifice.

101. A method for cleaning an endoscope during a procedure, the method comprising utilizing a trocar comprising a main body defining a cavity for receiving an endoscope, a wash orifice disposed in the main body and configured allow a flow of wash solution into the cavity, and a gas orifice disposed between the distal end of the main body and the wash orifice, the gas orifice configured allow a flow of gas into the cavity, the method comprising:

washing the endoscope;

drying the endoscope; and

managing residual fluids on the endoscope or in the cavity, or both.

102. The method of embodiment 101, wherein the managing residual fluids comprises using physical seals to compartmentalize the wash solution during the washing and drying phases of the method.

103. The method of embodiment 101, wherein the managing residual fluids comprises using suction to extract residual wash solution that ingresses the trocar during the washing and drying phases of the method.

104. The method of embodiment 101, wherein the managing residual fluids comprises using rear gas pressure to prevent wash solution ingress during the washing and drying phases of the method.

105. The method of embodiment 101, wherein the managing residual fluids comprises using a rear gas seal to prevent wash solution ingress during the washing and drying phases of the method.

106. The method of embodiment 101, wherein the managing residual fluids comprises using vents to passively allow wash solution to pass out of the trocar during the washing and drying phases of the method.

107. The method of embodiment 101, wherein the managing residual fluids comprises using drains and ribs to passively allow wash solution to pass out of the trocar during the washing and drying phases of the method.

Although shown and described in example embodiments, it is apparent that departures from specific designs and methods described and shown will suggest themselves to those skilled in the art and may be used without departing from the spirit and scope of the present disclosure. The present disclosure is not restricted to the particular constructions described and illustrated but should be constructed to cohere with all modifications that may fall within the scope of the appended claims. It is also noted that many of the above solutions are complementary such that more than one solution may be used at the same time to provide a more effective solution.

As used herein, the terms “about” and/or “approximately” when used in conjunction with numerical values and/or ranges generally refer to those numerical values and/or ranges near to a recited numerical value and/or range. In some instances, the terms “about” and “approximately” may mean within ± 10% of the recited value. For example, in some instances, “about 100 [units]” may mean within ± 10% of 100 (e.g., from 90 to 110). The terms “about” and “approximately” may be used interchangeably.

Also, various disclosed concepts may be embodied as one or more methods, of which an example has been provided. The acts performed as part of the method may be ordered in any suitable way. Accordingly, embodiments may be constructed in which acts are performed in an order different than illustrated, which may include performing some acts simultaneously, even though shown as sequential acts in illustrative embodiments.

CLAIMS

We claim:

1. An apparatus, comprising:

a head portion including an inlet port, the inlet port configured to receive at least one of a liquid solution or a gas;

a tube portion extending from the head portion, the tube portion including opposite edges with a first edge that extends a further distance from the head portion than a second opposite edge, the tube portion defining:

an instrument lumen configured to receive a shaft of an instrument; and

a cleaning lumen coupled to the inlet port and configured to receive the at least one of the liquid solution or the gas, the cleaning channel extending along a length of the tube portion and terminating in a cleaning orifice that is proximally directed and opens into the instrument lumen distal to the second edge of the tube portion, the cleaning lumen configured to deliver the at least one of the liquid solution or the gas into the instrument lumen when the shaft is received within the instrument lumen to clean a portion of the instrument; and

a set of sensors disposed near a distal end of the tube portion, the set of sensors configured to detect a position of a distal end of the instrument within the instrument lumen.

2. The apparatus of claim 1, wherein the cleaning lumen is configured to alternatively receive the liquid solution or the gas such that the liquid solution or the gas can be delivered through the cleaning orifice and into the instrument lumen followed by the other of the liquid solution and the gas.

3. The apparatus of any one of claims 1-2, further comprising a reservoir configured to supply the liquid solution into the inlet port and the cleaning lumen.

4. The apparatus of any one of claims 1-3, further comprising a control unit operatively coupled to the set of sensors, the control unit configured to control a delivery of the at least one of the liquid solution or the gas into the inlet port based on data received from the set of sensors.

5. The apparatus of any one of claims 1-3, further comprising a control unit operatively coupled to the set of sensors, the control unit configured to provide visual or audible feedback based on data received from the set of sensors.

6. The apparatus of any one of claims 1-5, wherein the tube portion further defines a gas lumen configured to receive the gas, the gas lumen extending along the length of the tube portion and terminating in a gas orifice opening into the instrument lumen.

7. The apparatus of claim 6, wherein:

the cleaning lumen is configured to deliver the liquid solution into the instrument lumen, and

the gas lumen is configured to deliver the gas into the instrument lumen while the liquid solution is being delivered into the instrument lumen to atomize the liquid solution.

8. The apparatus of claim 7, wherein:

the cleaning lumen is configured to deliver the liquid solution into the instrument lumen, and

the gas lumen is configured to deliver the gas into the instrument lumen after the liquid solution has been delivered into the instrument lumen to dry the portion of the instrument.

9. The apparatus of any one of claims 1-8, wherein the tube portion further defines a suction lumen configured to remove moisture from within the instrument lumen.

10. The apparatus of claim 1, wherein the cleaning orifice is disposed on a side of the tube portion having the first edge.

11. The apparatus of any one of claims 1-10, wherein the cleaning orifice extends proximally at an angle relative to the cleaning lumen to at least partially face a distal end of the instrument.

12. The apparatus of claim 11, wherein the cleaning orifice is configured to deliver the at least one of the liquid solution or the gas at an output angle that is greater than about 90 degrees relative to a longitudinal axis of the cleaning lumen.

13. The apparatus of any one of claims 1-12, wherein each sensor of the set of sensors is disposed at a different location along a longitudinal axis of the tube portion such that the set of sensors can detect the position of the distal end of the instrument relative to the different locations.

14. The apparatus of any one of claims 1-12, wherein the set of sensors includes:

a first sensor configured to detect that the distal end of the instrument has been retracted a first distance into the instrument lumen; and

a second sensor configured to detect that the distal end of the instrument has been retracted a second distance greater than the first distance into the instrument lumen.

15. The apparatus of any one of claims 1-14, wherein the set of sensors is mounted to a flexible circuit board.

16. The apparatus of claim 15, wherein the flexible circuit board extends along a longitudinal axis of the tube portion.

17. The apparatus of any one of clams 1-16, further comprising a set of lens coupled to the set of sensors.

18. An apparatus, comprising:

a tube portion including opposite edges with a first edge that extends further distally than the second opposite edge, the tube portion defining:

an instrument lumen configured to receive a shaft of an instrument; and

a cleaning lumen extending along a length of the tube portion and terminating in an orifice that is proximally directed and opens into the instrument lumen distal to the second edge of the tube portion, the cleaning lumen configured to deliver at least one of the liquid solution or the gas through the orifice into the instrument lumen during a cleaning process for cleaning the instrument;

a set of sensors disposed near a distal end of the tube portion, the set of sensors configured to detect a position of a distal end of the instrument within the instrument lumen; and

a control unit operatively coupled to the set of sensors, the control unit configured to control the cleaning process based on data received from the set of sensors.

19. The apparatus of claim 18, wherein the control unit is further configured to provide visual or audible feedback based on the data received from the set of sensors.

20. The apparatus of any one of claims 18-19, wherein the cleaning process includes at least one of:

a defogging operation in which a burst of the gas is expelled into the instrument lumen;

a priming operation in which a volume of the liquid solution is loaded into the cleaning lumen;

a wash operation in which the liquid solution is expelled into the instrument lumen; and

a drying operation in which the gas is expelled into the instrument lumen.

21. The apparatus of claim 20, wherein the cleaning process includes the wash operation followed by the drying operation.

22. The apparatus of claim 21, wherein the control unit is configured to control the cleaning process by initiating the wash operation in response to receiving a signal from a sensor of the set of sensors indicating that the instrument has been retracted a predetermined distance from the distal end of the tube portion.

23. The apparatus of claim 21, wherein the cleaning process further includes the priming operation before the wash operation.

24. The apparatus of claim 23, wherein the control unit is configured to control the cleaning process by:

initiating the priming operation in response to receiving a first signal from a first sensor of the set of sensors indicating that the instrument has been retracted beyond a first distance from the distal end of the tube portion; and

initiating the wash operation in response to receiving a second signal from a second sensor of the set of sensors indicating that the instrument has been retracted a second distance from the distal end of the tube portion, the second distance being greater than the first distance.

25. The apparatus of claim 21, wherein the cleaning process further includes the defogging operation before the wash operation.

26. The apparatus of claim 25, wherein the control unit is configured to control the cleaning process by:

Initiating the defogging operation in response to receiving a first signal from a distal most sensor of the set of sensors; and

initiating the wash operation in response to receiving a second signal from a sensor of the set of sensors other than the distal most sensor.

27. The apparatus of claim 21, wherein a duration of the wash operation and the drying operation is less than about five seconds.

28. The apparatus of claim 20, wherein the cleaning process only includes the defogging operation.

29. A method, comprising:

priming, in response to detecting via a first sensor of a set of sensors that an instrument disposed within an instrument lumen of a trocar has been retracted a first distance from a distal end of the trocar, a cleaning lumen of the trocar with a volume of liquid solution;

expelling, in response to detecting via a second sensor of the set of sensors that the instrument has been retracted a second distance greater than the first distance from the distal end of the trocar, the volume of liquid solution into the instrument lumen such that at least a portion of the volume of the liquid solution contacts and cleans a surface of the instrument; and

expelling a volume of pressurized gas into the instrument lumen.

30. The method of claim 29, further comprising:

expelling, prior to priming the cleaning lumen with the volume of liquid solution, a burst of pressurized gas into the instrument lumen to defog the surface of the instrument.

31. The method of claim 30, wherein the expelling is in response to detecting that the instrument has been retracted pass a most distal sensor of the set of sensors.

32. The method of any one of claims 29-31, wherein the set of sensors are disposed near the distal end of the trocar within or on a portion of the trocar defining the instrument lumen.

33. The method of any one of claims 29-32, wherein the volume of liquid solution is between about 5 µl to about 50 µl.

34. The method of any one of claims 29-33, wherein expelling the volume of gas includes expelling the volume of gas after expelling the volume of liquid solution to dry the surface of the instrument.

35. The method of any one of claims 29-33, wherein expelling the volume of gas includes expelling the volume of gas while expelling the volume of liquid solution to atomize the volume of liquid solution.

36. The method of any one of claims 29-35, wherein expelling the volume of gas is for a predetermined time period of about 0.5 seconds to about 5 seconds.

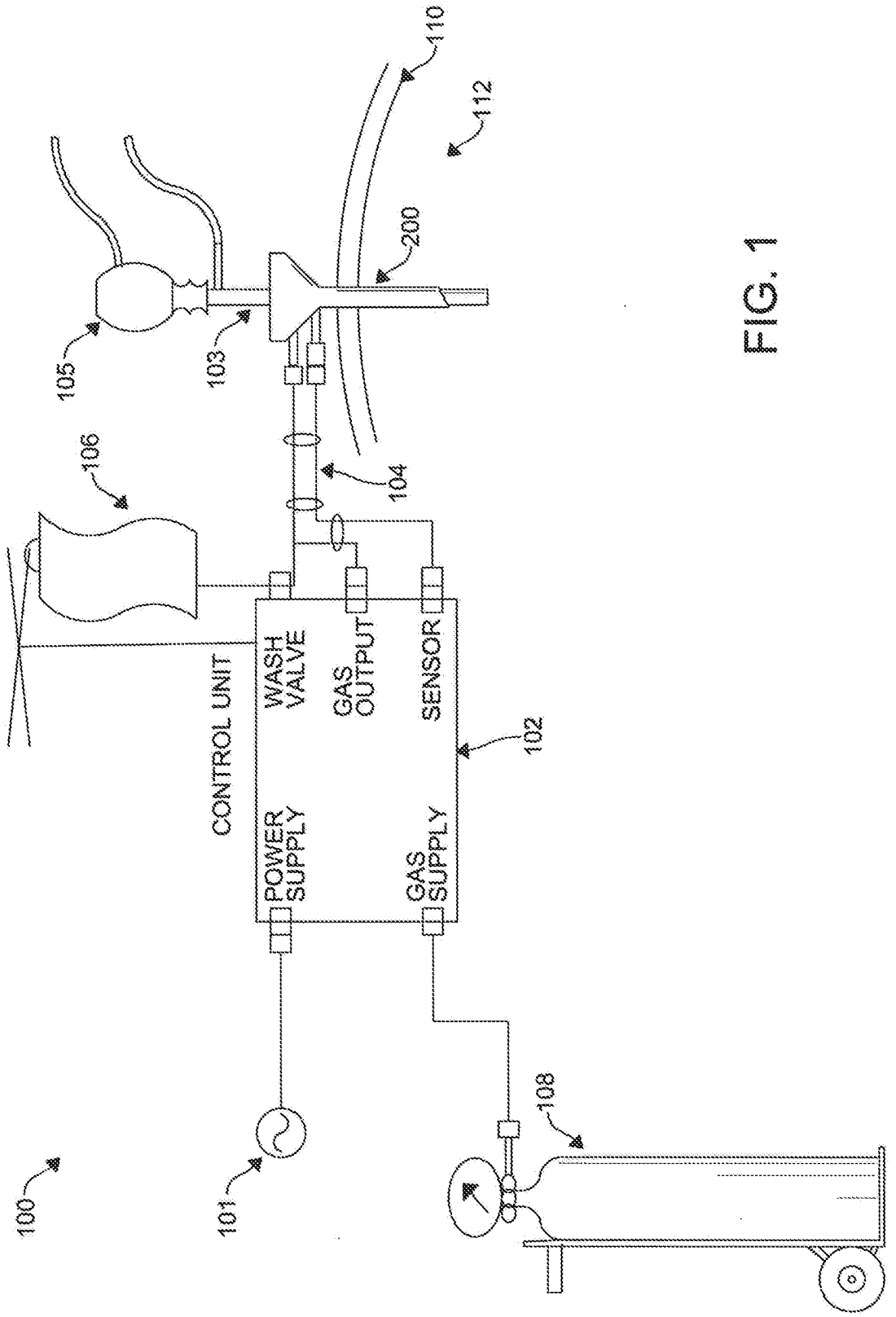
110
112
200
105
103
106
104
CONTROL UNIT
WASH VALVE
GAS OUTPUT
SENSOR
102
POWER SUPPLY
GAS SUPPLY
108
100
101

FIG. 1

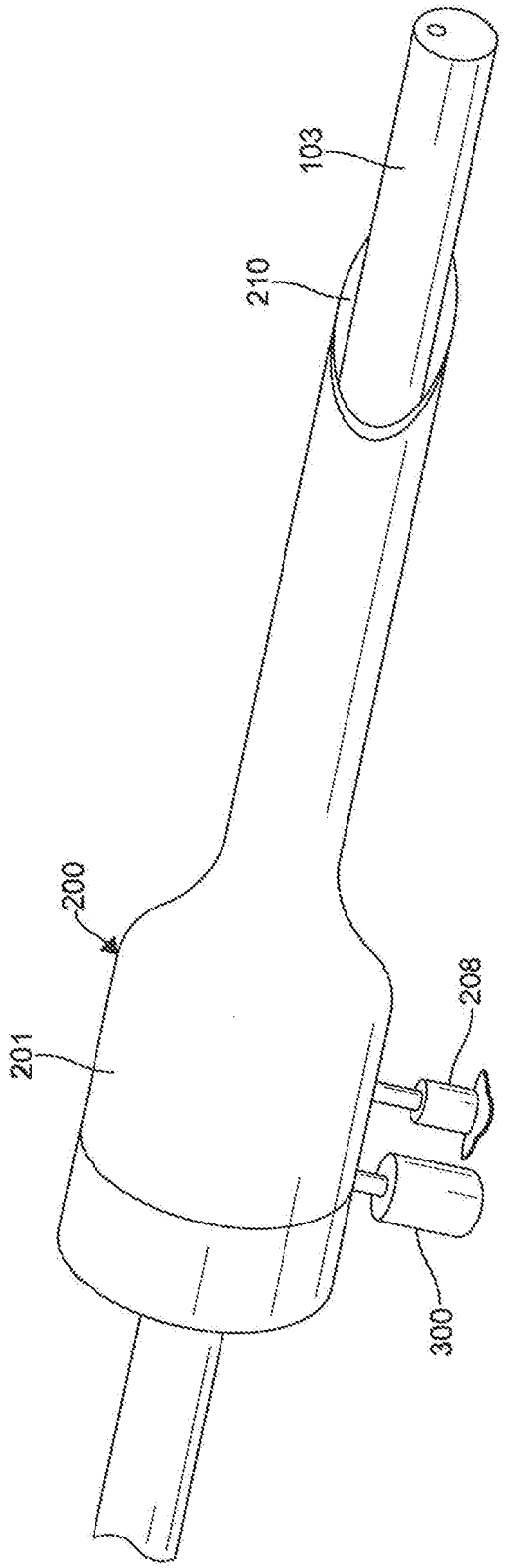
103
210
200
201
208
300

FIG. 2A

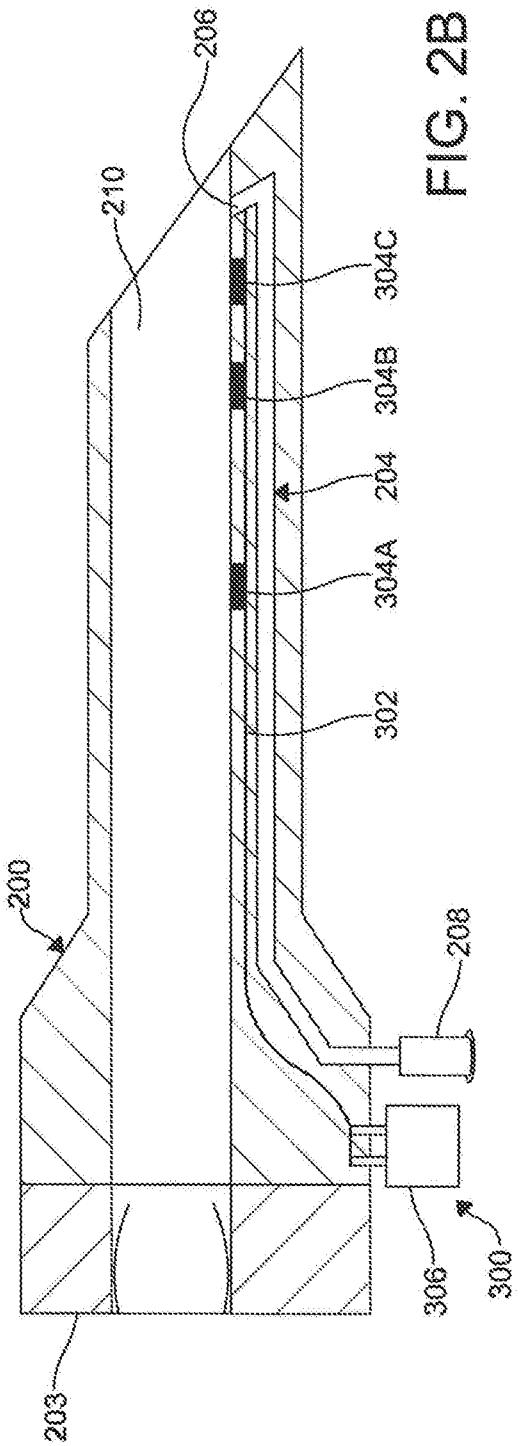
206
210
304C
304B
204
304A
302
200
208
306
300
203

FIG. 2B

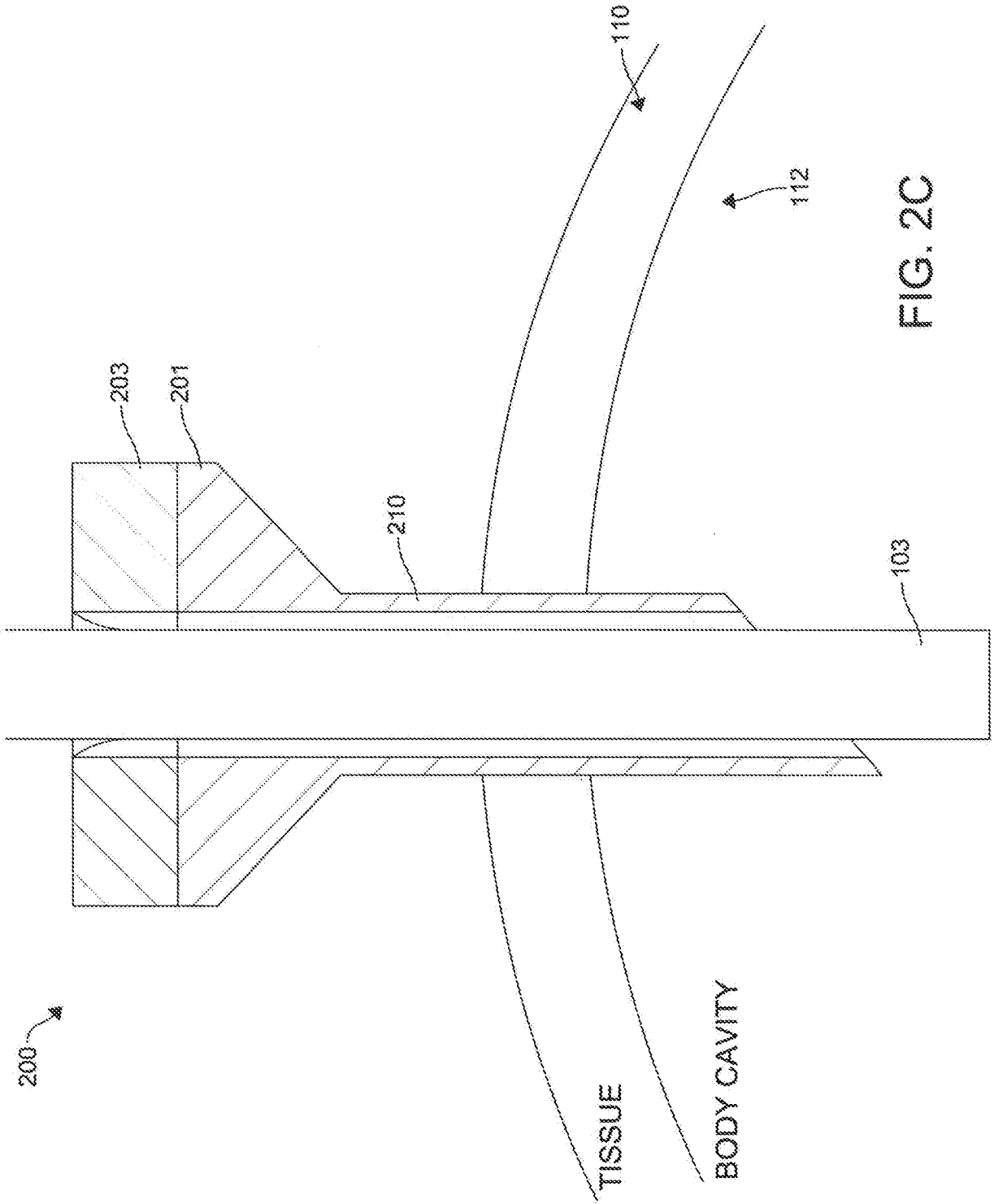

FIG. 2C

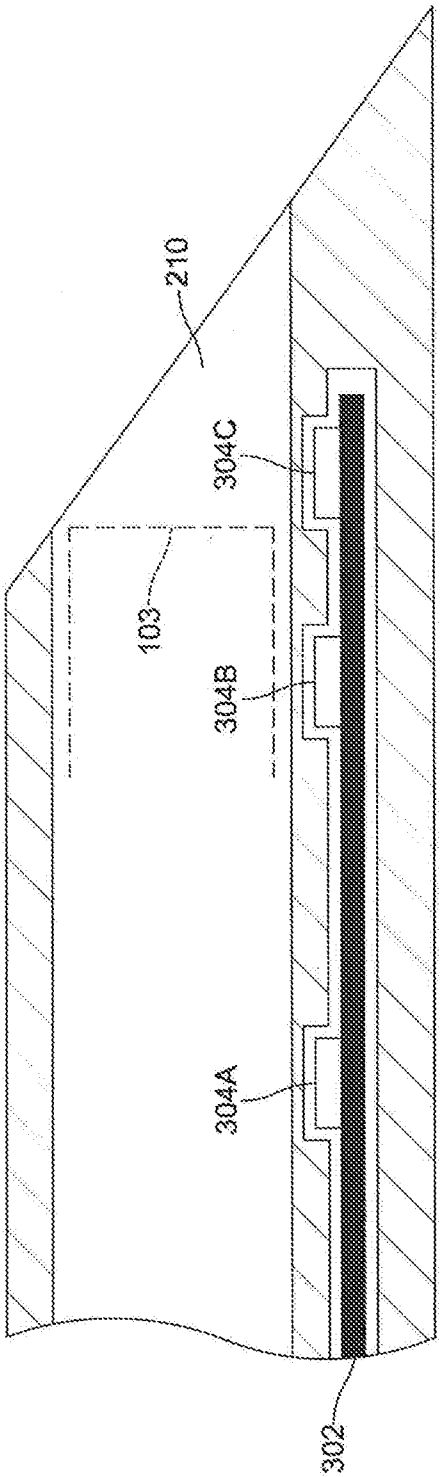

FIG. 3A

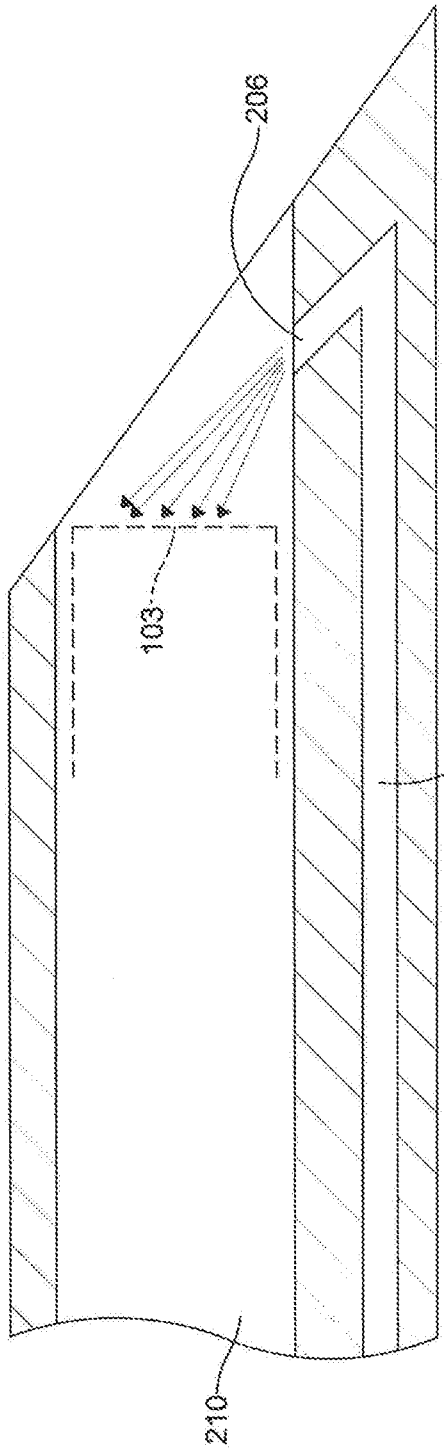

FIG. 3B

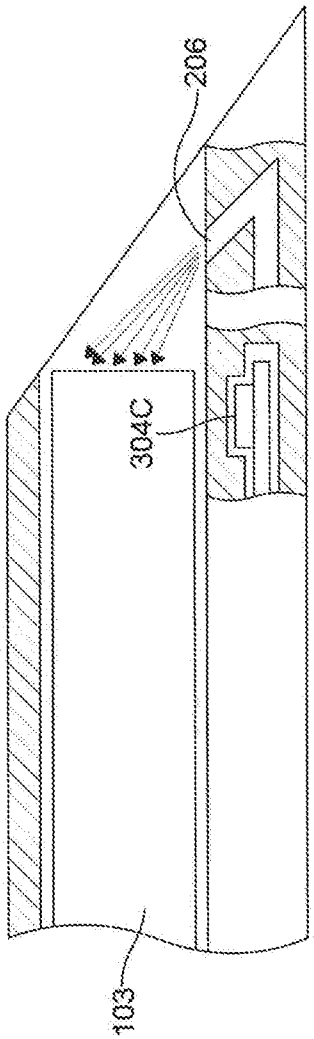

FIG. 3C

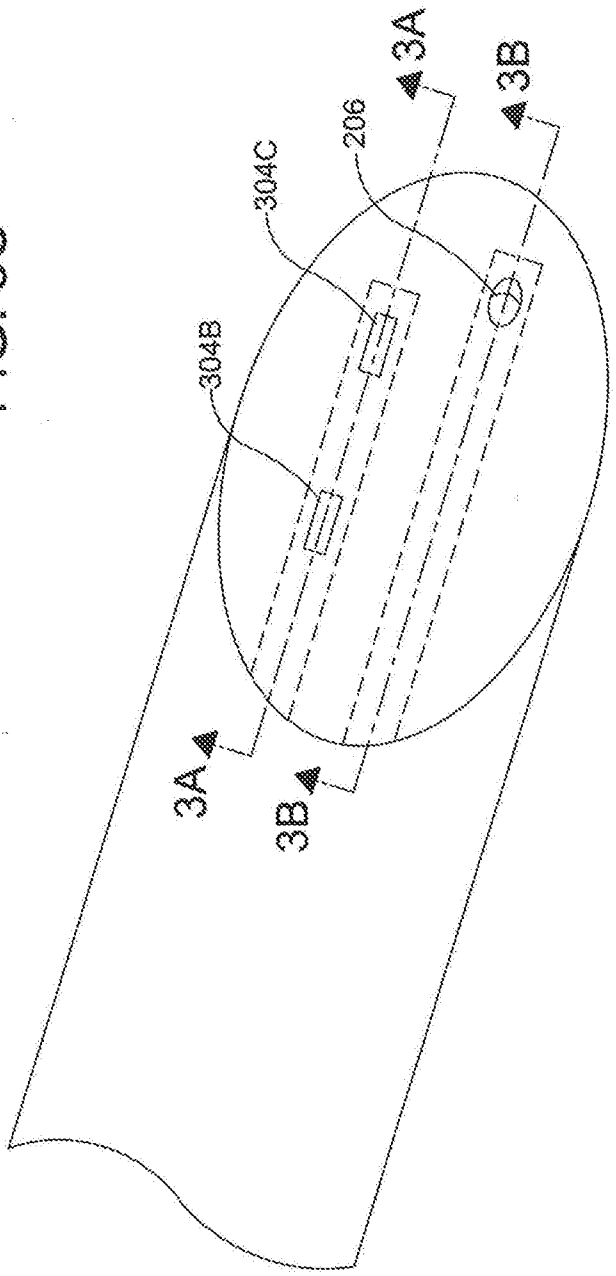

FIG. 3D

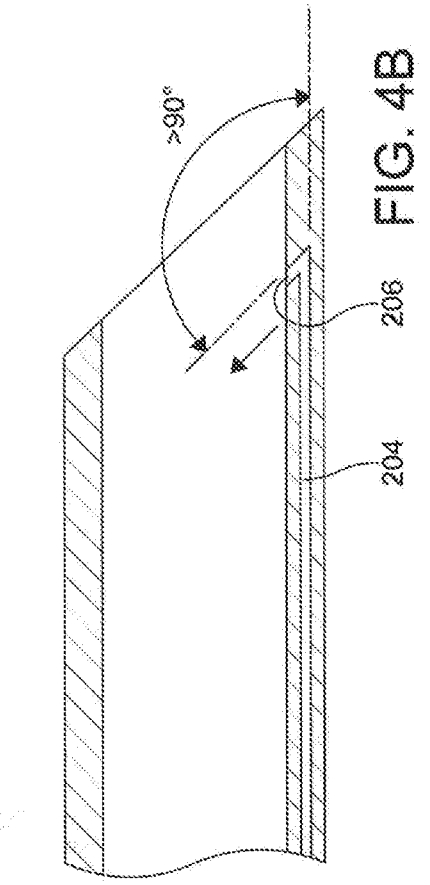

FIG. 4B

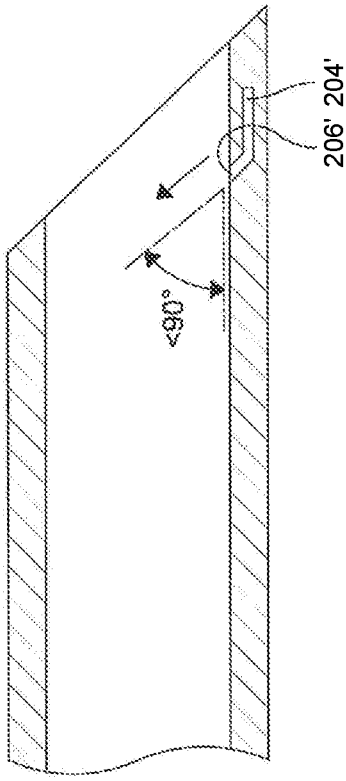

FIG. 4D

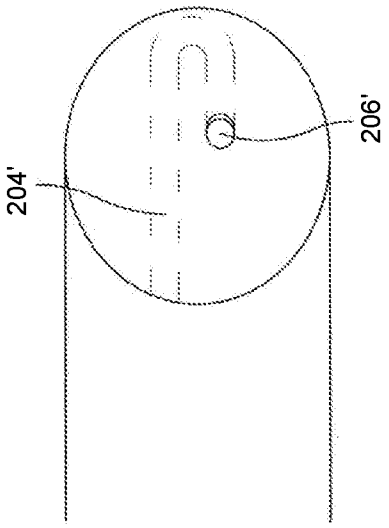

FIG. 4E

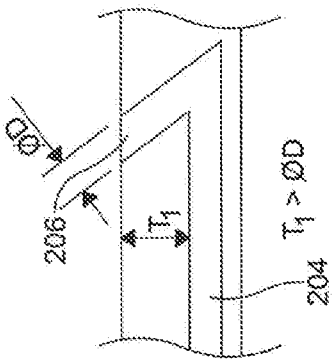

FIG. 4A

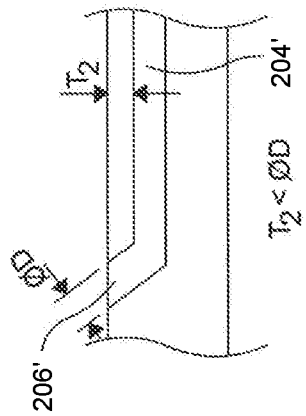

FIG. 4C

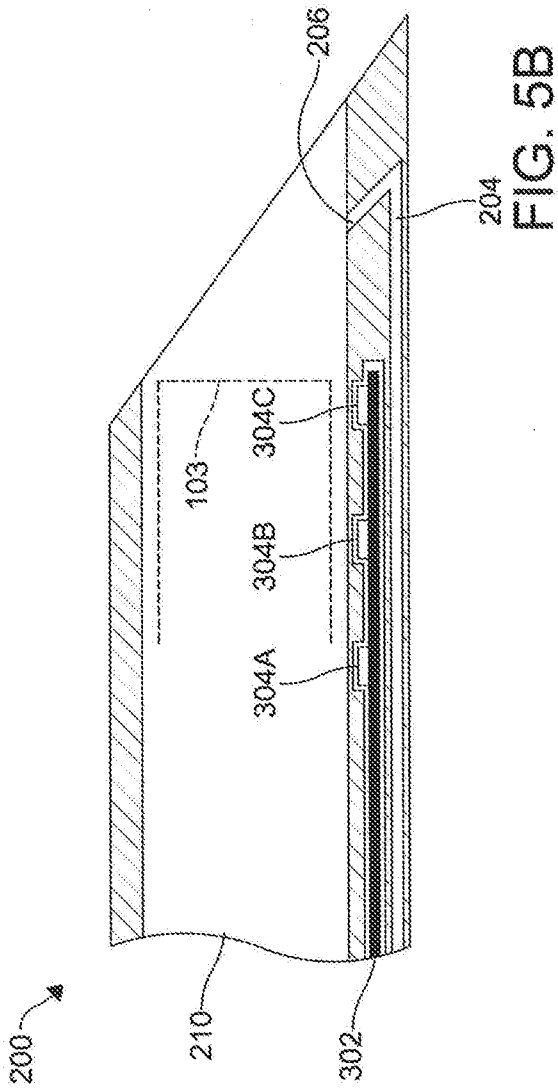

FIG. 5B

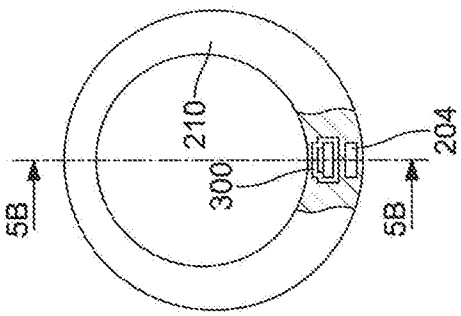

FIG. 5A

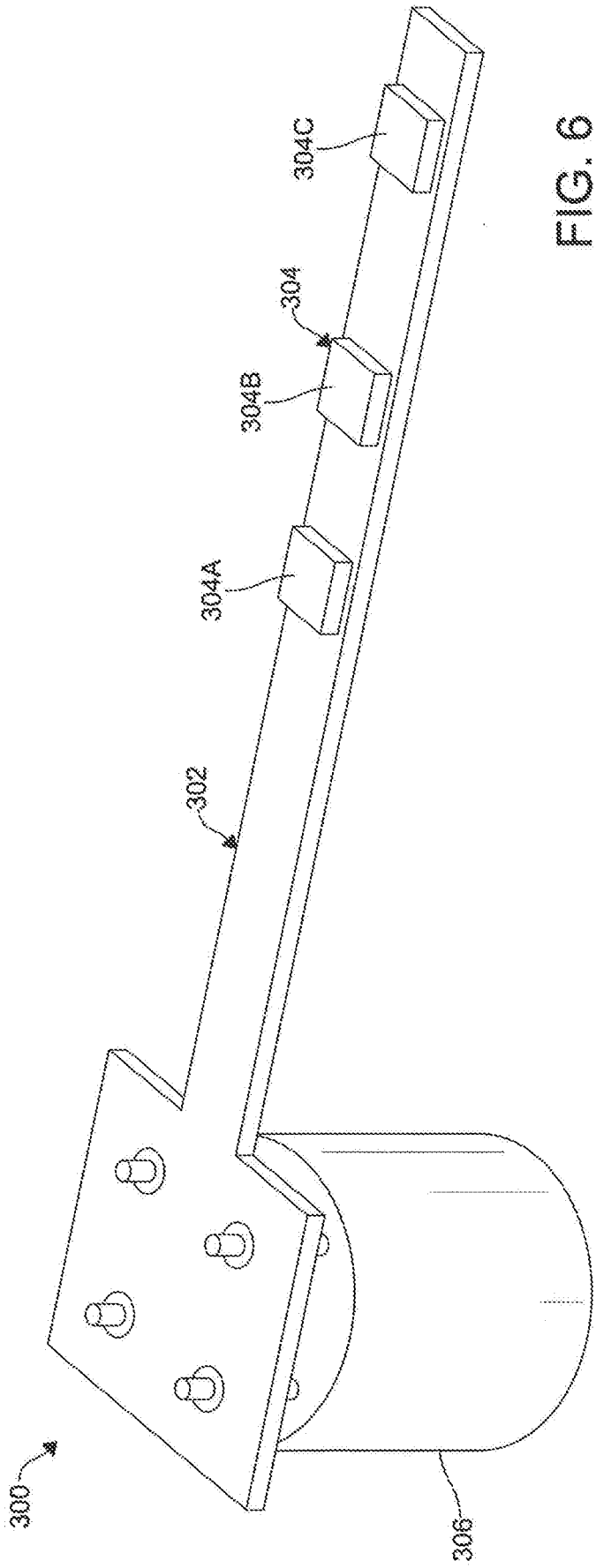

FIG. 6

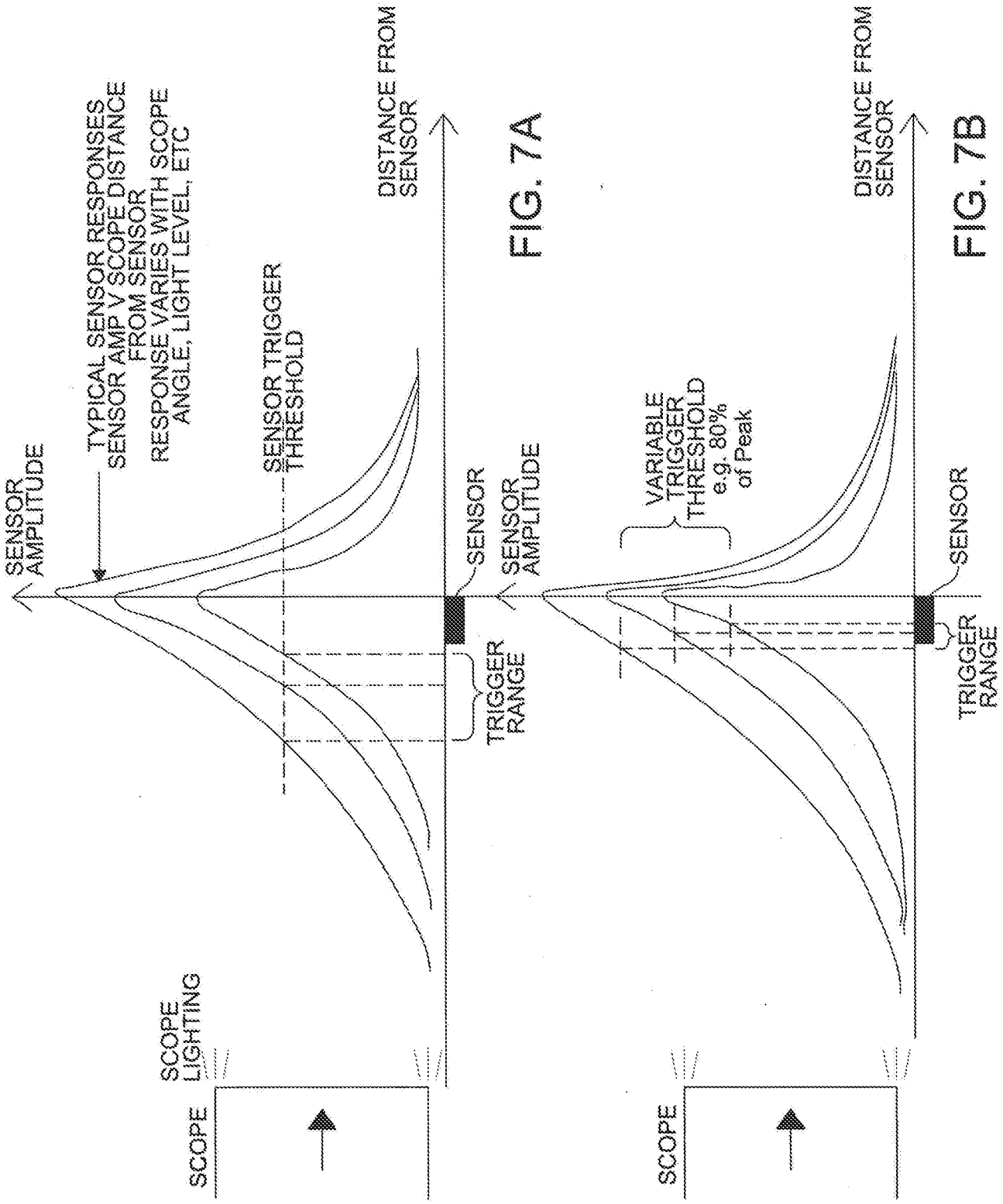
SENSOR AMPLITUDE
TYPICAL SENSOR RESPONSES
SENSOR AMP V SCOPE DISTANCE FROM SENSOR
RESPONSE VARIES WITH SCOPE ANGLE, LIGHT LEVEL, ETC
SENSOR TRIGGER THRESHOLD
DISTANCE FROM SENSOR
SENSOR
SENSOR AMPLITUDE
TRIGGER RANGE
SCOPE LIGHTING
SCOPE
FIG. 7A
VARIABLE TRIGGER THRESHOLD e.g. 80% of Peak
DISTANCE FROM SENSOR
SENSOR
TRIGGER RANGE
SCOPE
FIG. 7B

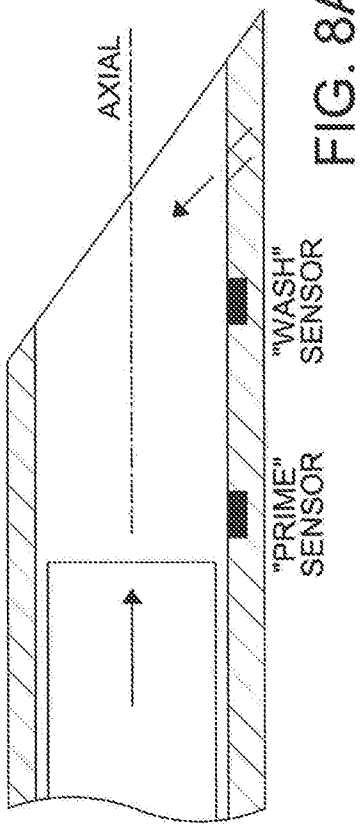

FIG. 8A

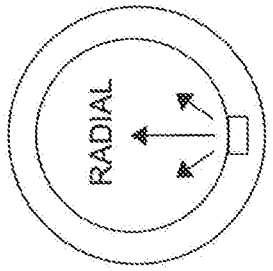

FIG. 8B

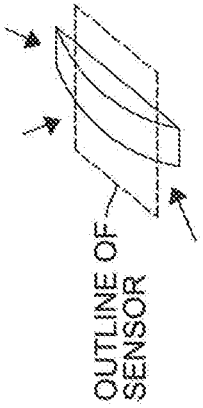

FIG. 8C

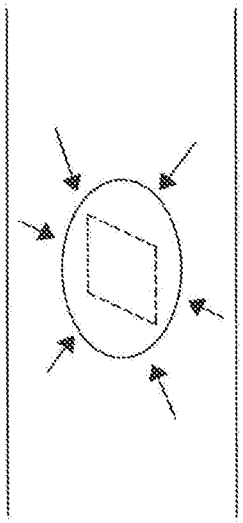

FIG. 8D

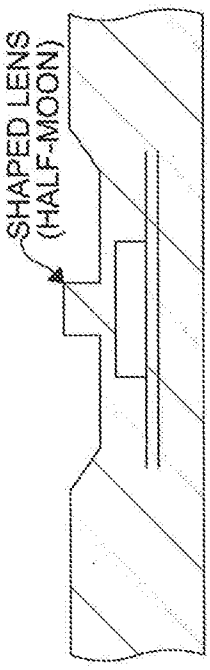

X-SECTION SHOWING A SHAPED LENS TO GATHER LIGHT PREFERENTIALLY FROM THE RADIAL DIRECTION

FIG. 8F

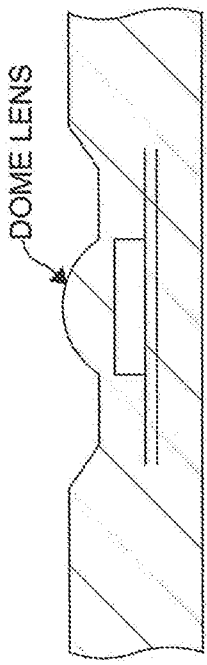

X-SECTION SHOWING A DOMED LENS TO GATHER LIGHT BOTH AXIALLY AND RADIALLY

FIG. 8E

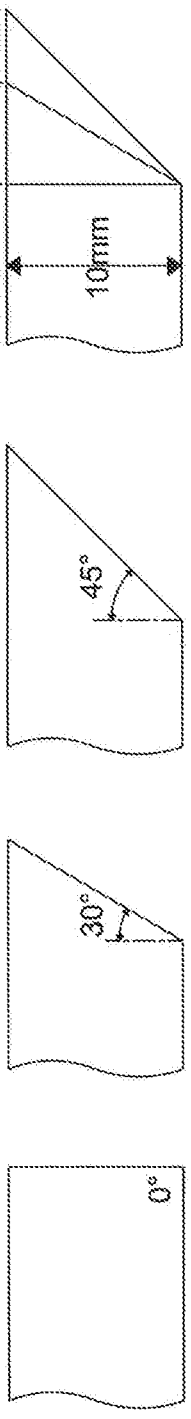

FIG. 9A

FIG. 9B

FIG. 9C

FIG. 9D

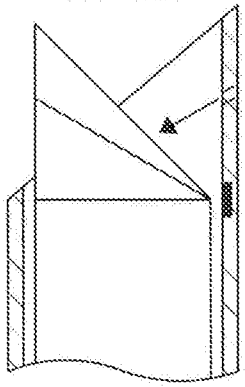

FIG. 9F

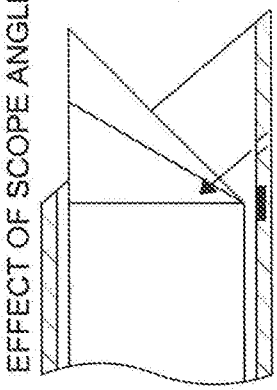

FIG. 9E

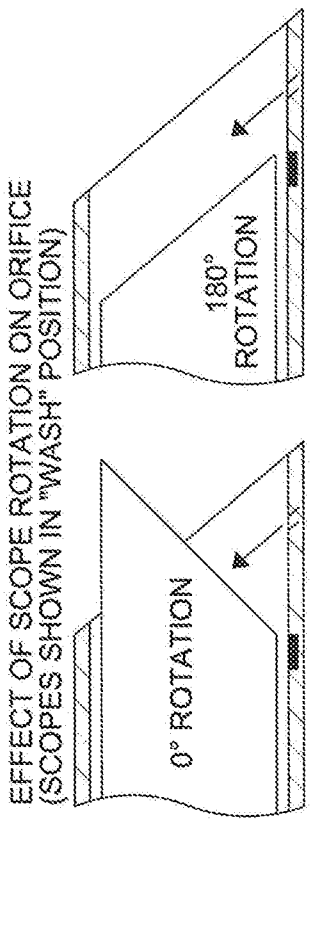

FIG. 9G

FIG. 9H

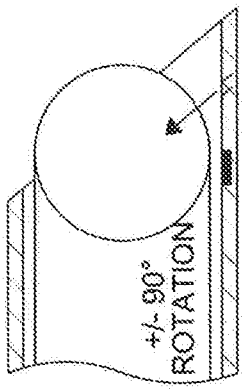

FIG. 9I

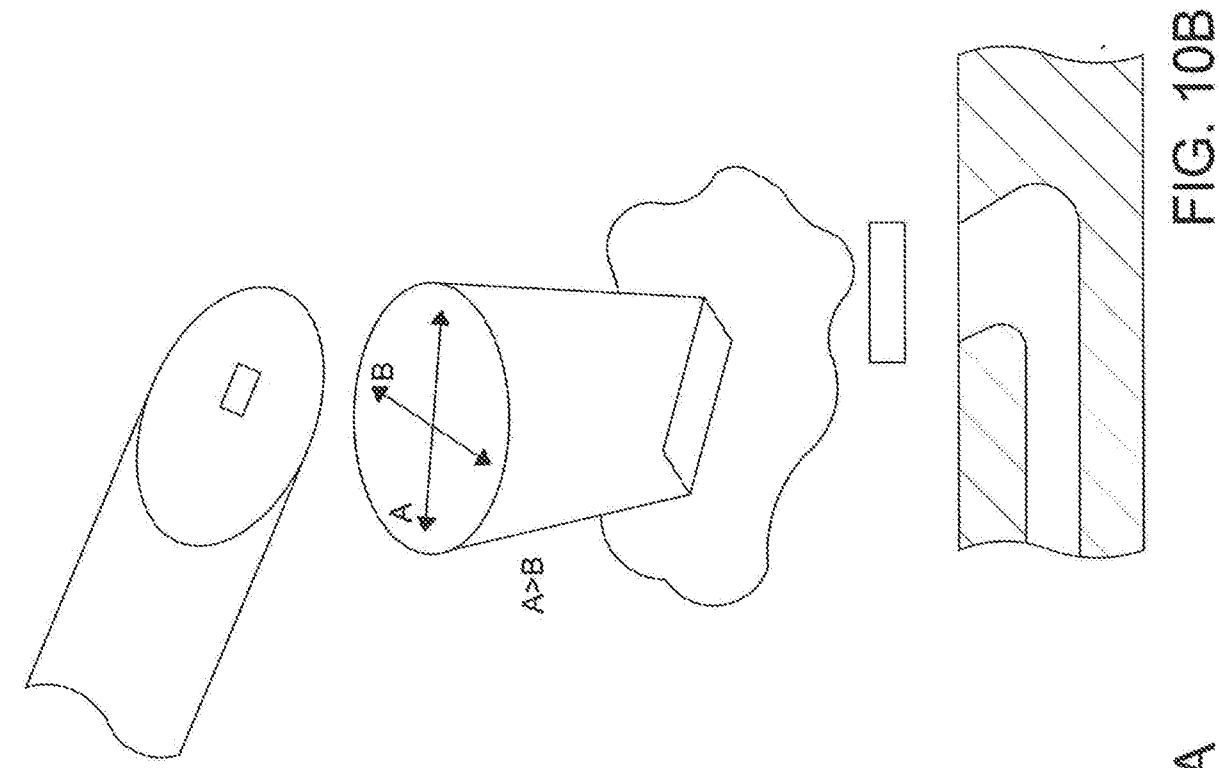

FIG. 10B

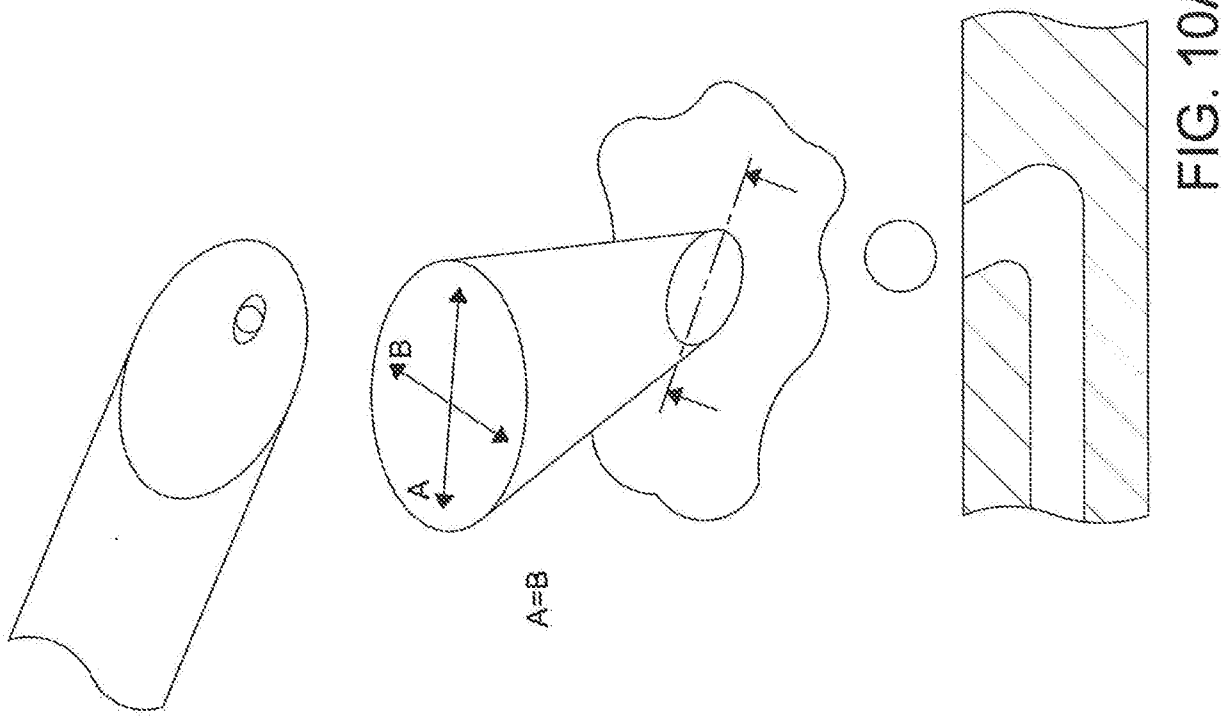

FIG. 10A

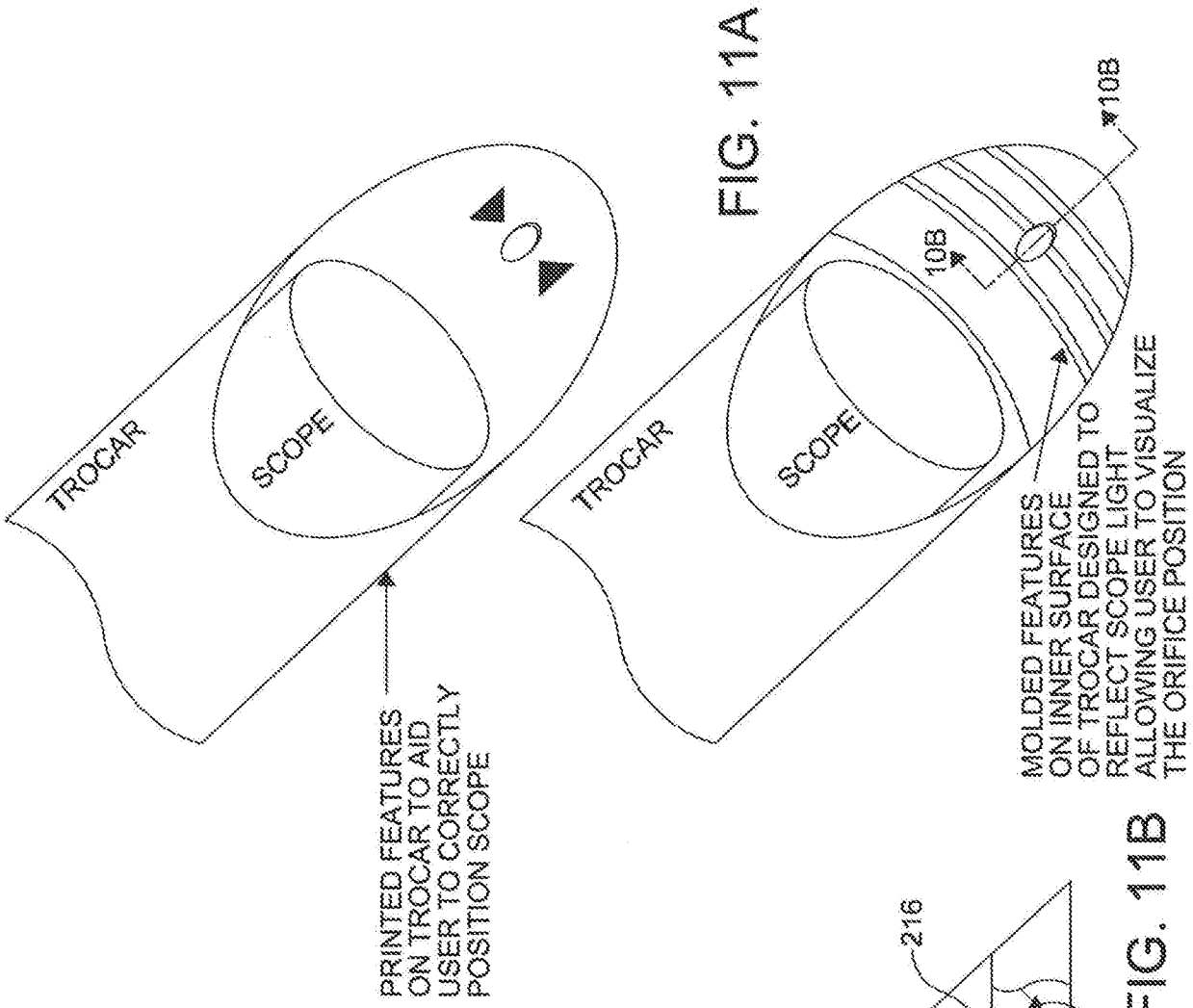

FIG. 11A

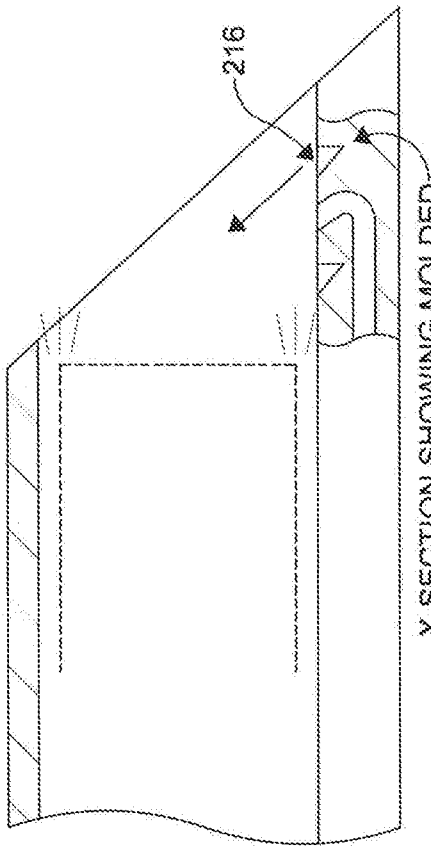

FIG. 11B

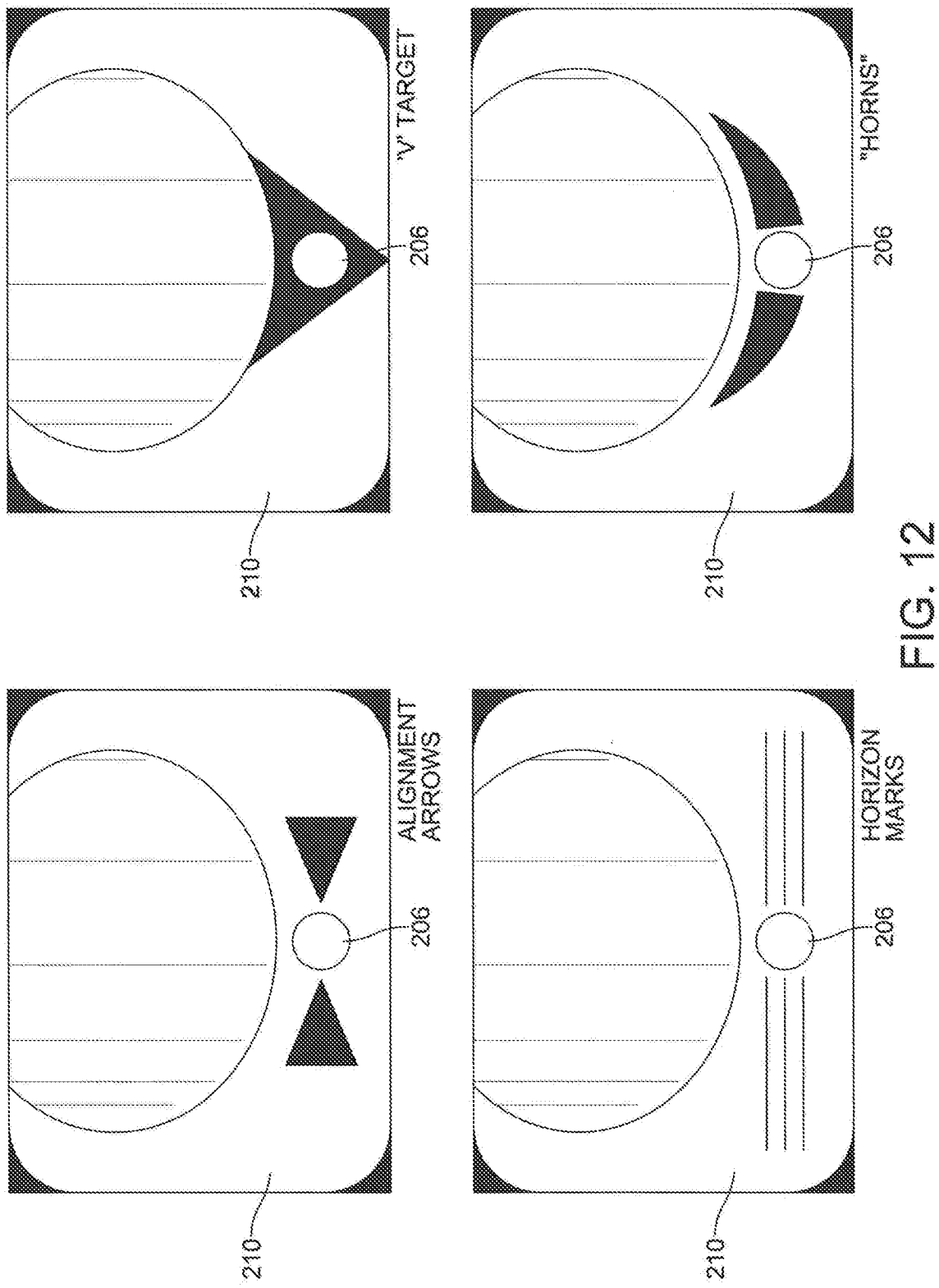
'V' TARGET
206
210
"HORNS"
206
210
ALIGNMENT ARROWS
206
210
HORIZON MARKS
206
210

FIG. 12

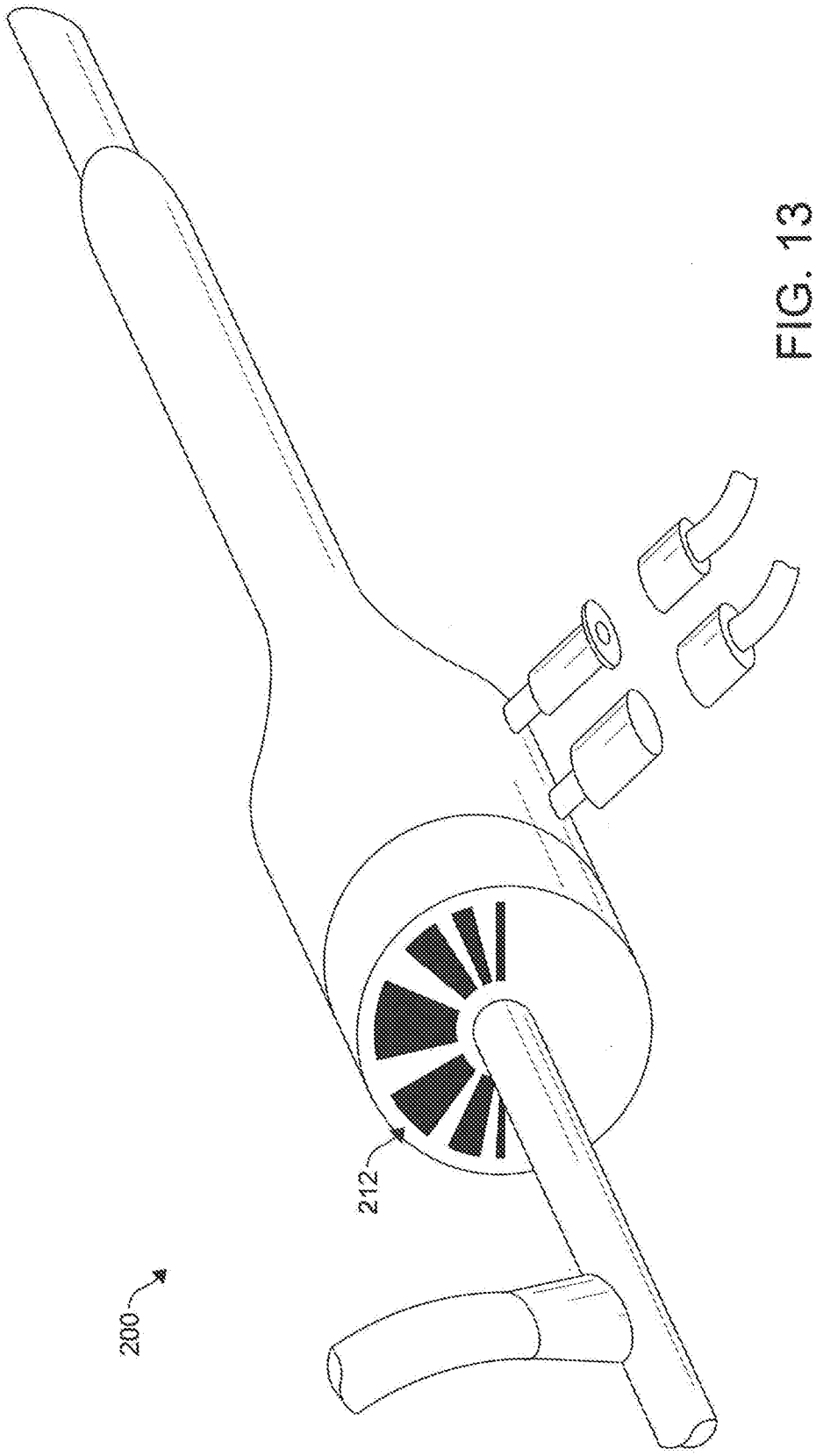

FIG. 13

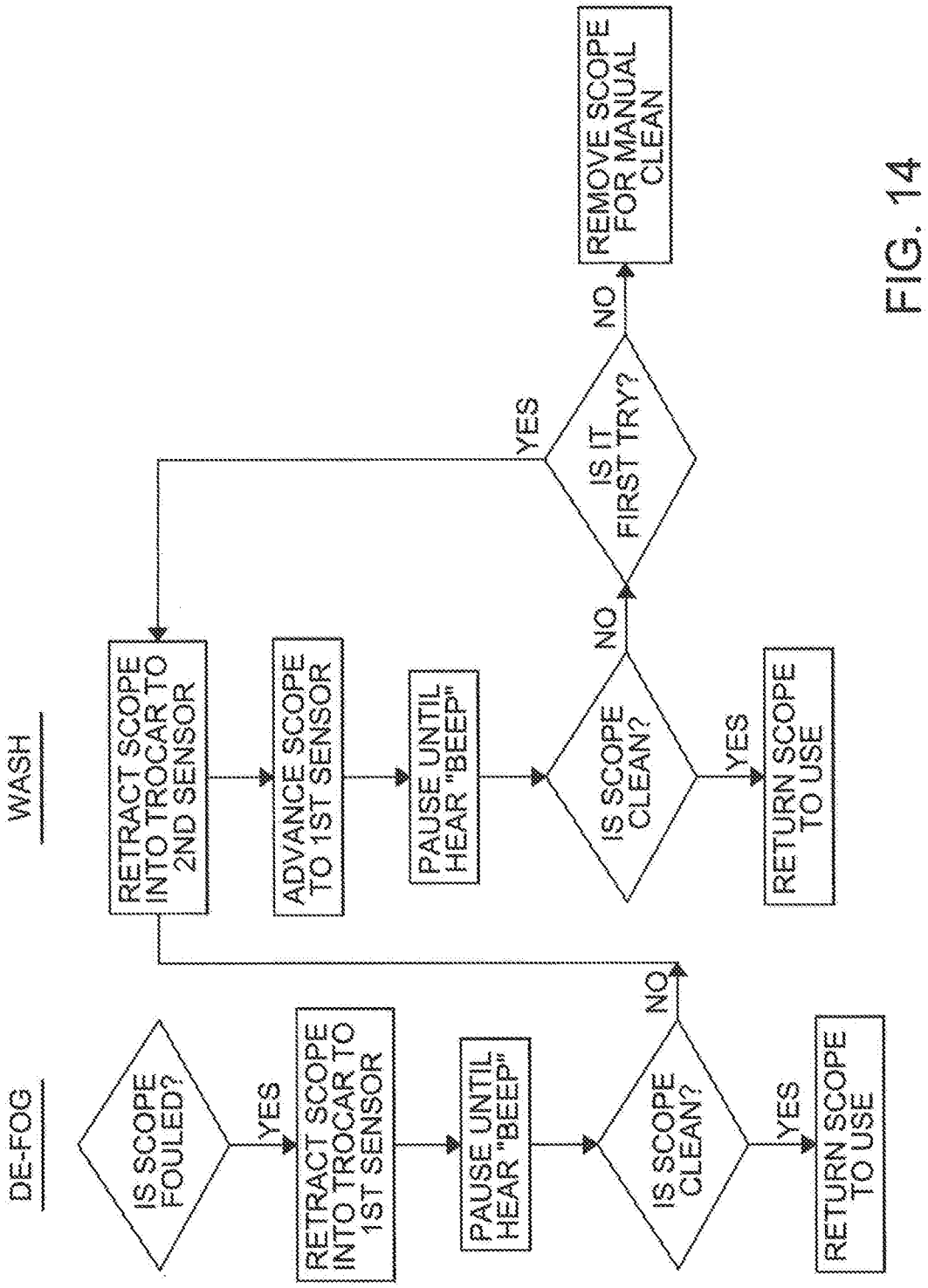
DE-FOG
IS SCOPE FOULED?
YES
RETRACT SCOPE INTO TROCAR TO 1ST SENSOR
PAUSE UNTIL HEAR "BEEP"
IS SCOPE CLEAN?
NO
YES
RETURN SCOPE TO USE
WASH
RETRACT SCOPE INTO TROCAR TO 2ND SENSOR
ADVANCE SCOPE TO 1ST SENSOR
PAUSE UNTIL HEAR "BEEP"
IS SCOPE CLEAN?
NO
YES
RETURN SCOPE TO USE
IS IT FIRST TRY?
YES
NO
REMOVE SCOPE FOR MANUAL CLEAN

FIG. 14

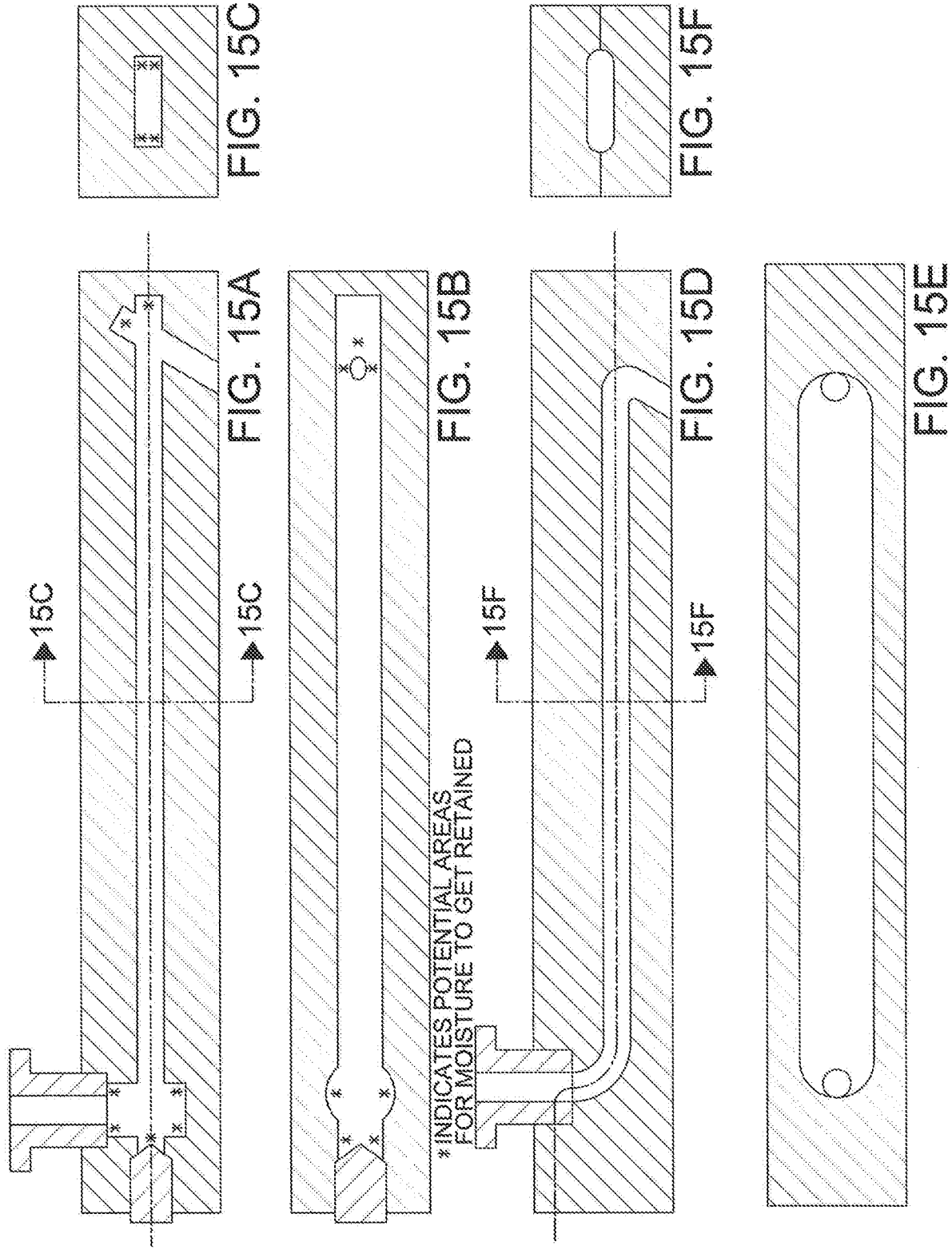

FIG. 15A

FIG. 15B

FIG. 15C

FIG. 15D

FIG. 15E

FIG. 15F

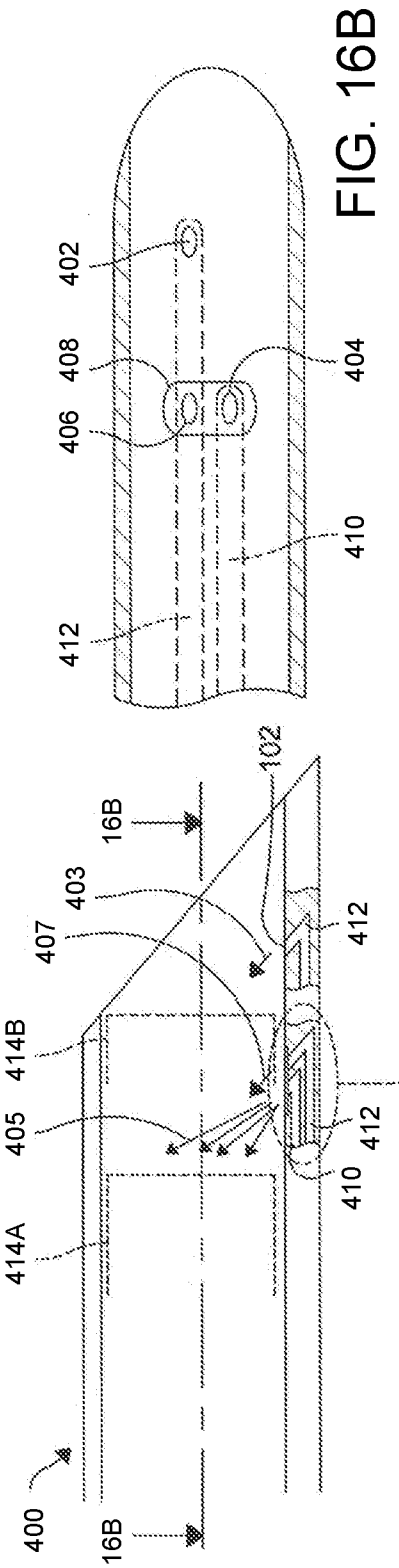

FIG. 16A

FIG. 16B

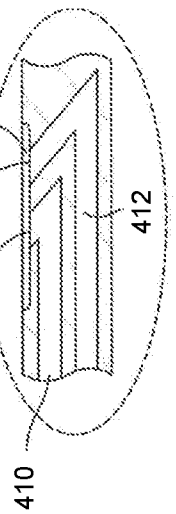

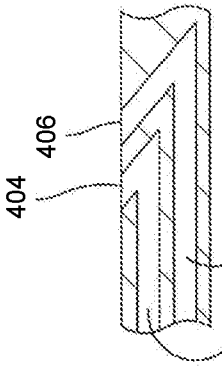

FIG. 16E

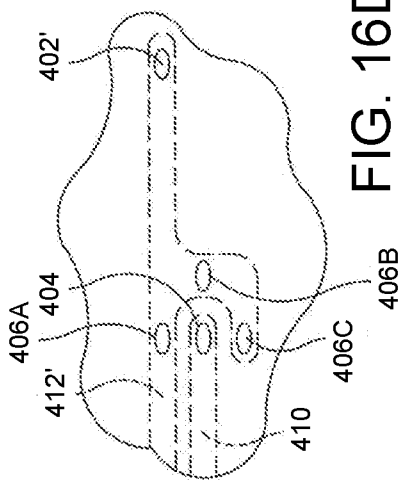

FIG. 16D

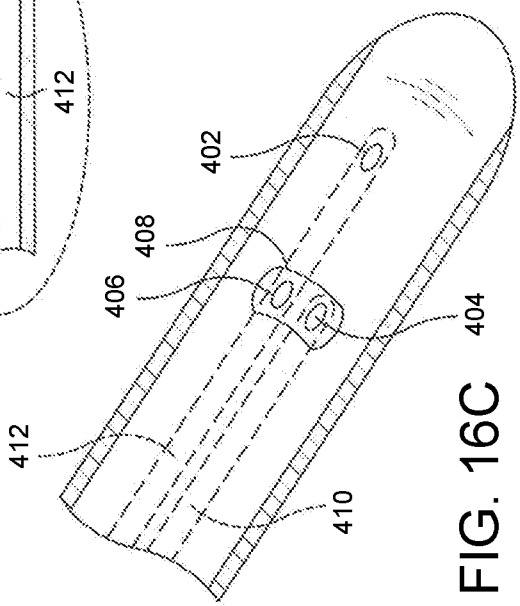

FIG. 16C

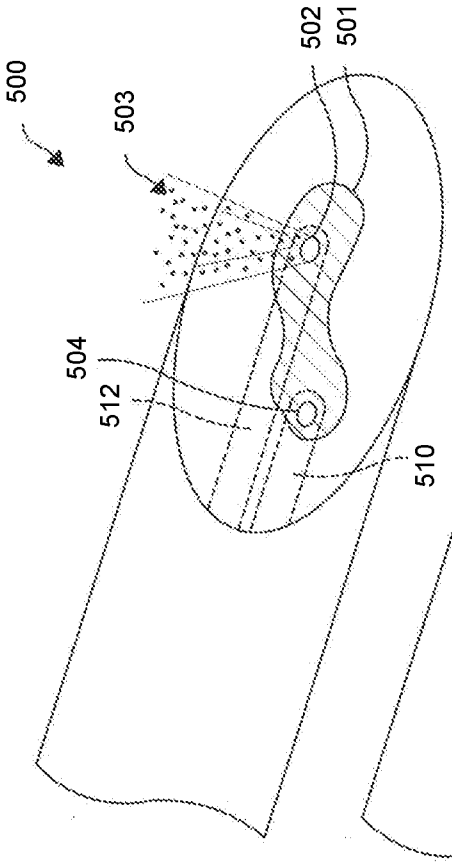

FIG. 17A

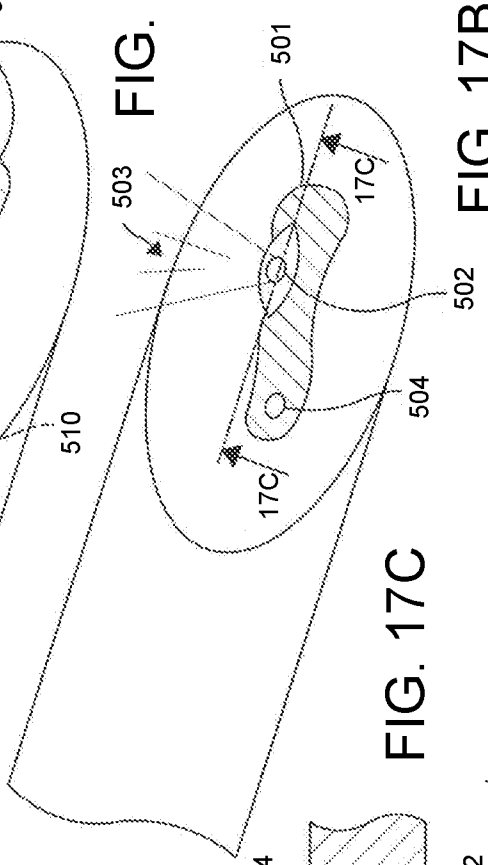

FIG. 17B

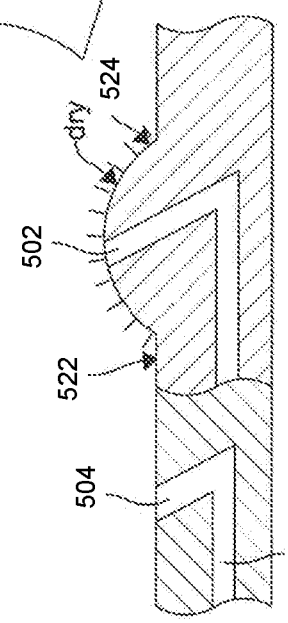

FIG. 17C

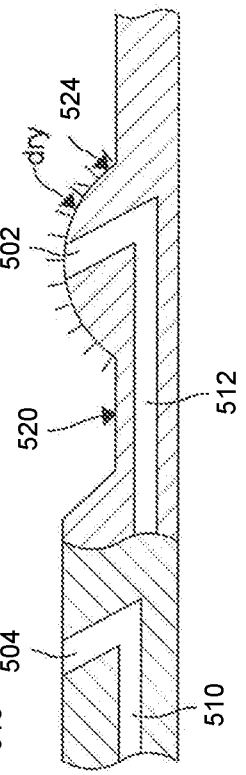

FIG. 17D

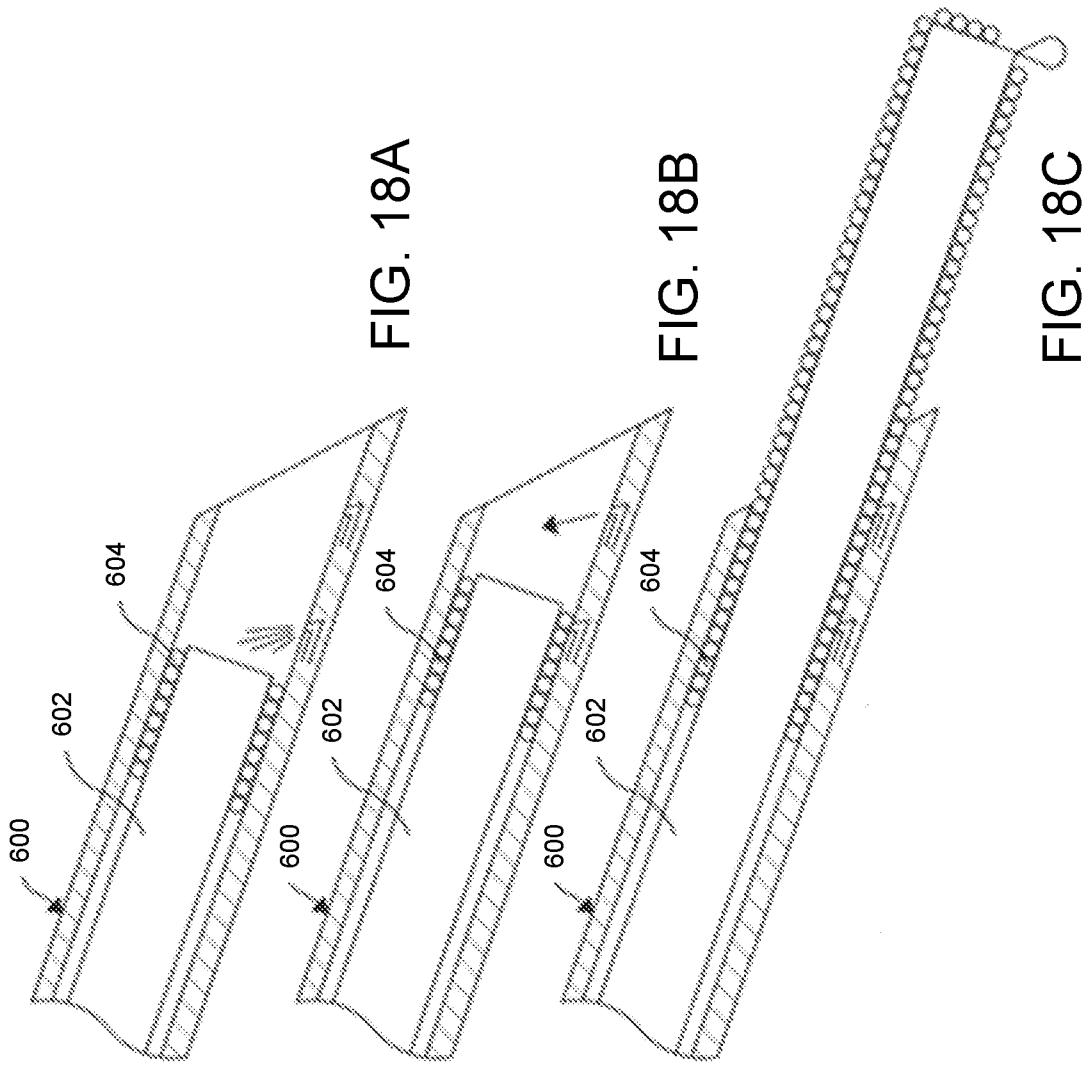

FIG. 18A

FIG. 18B

FIG. 18C

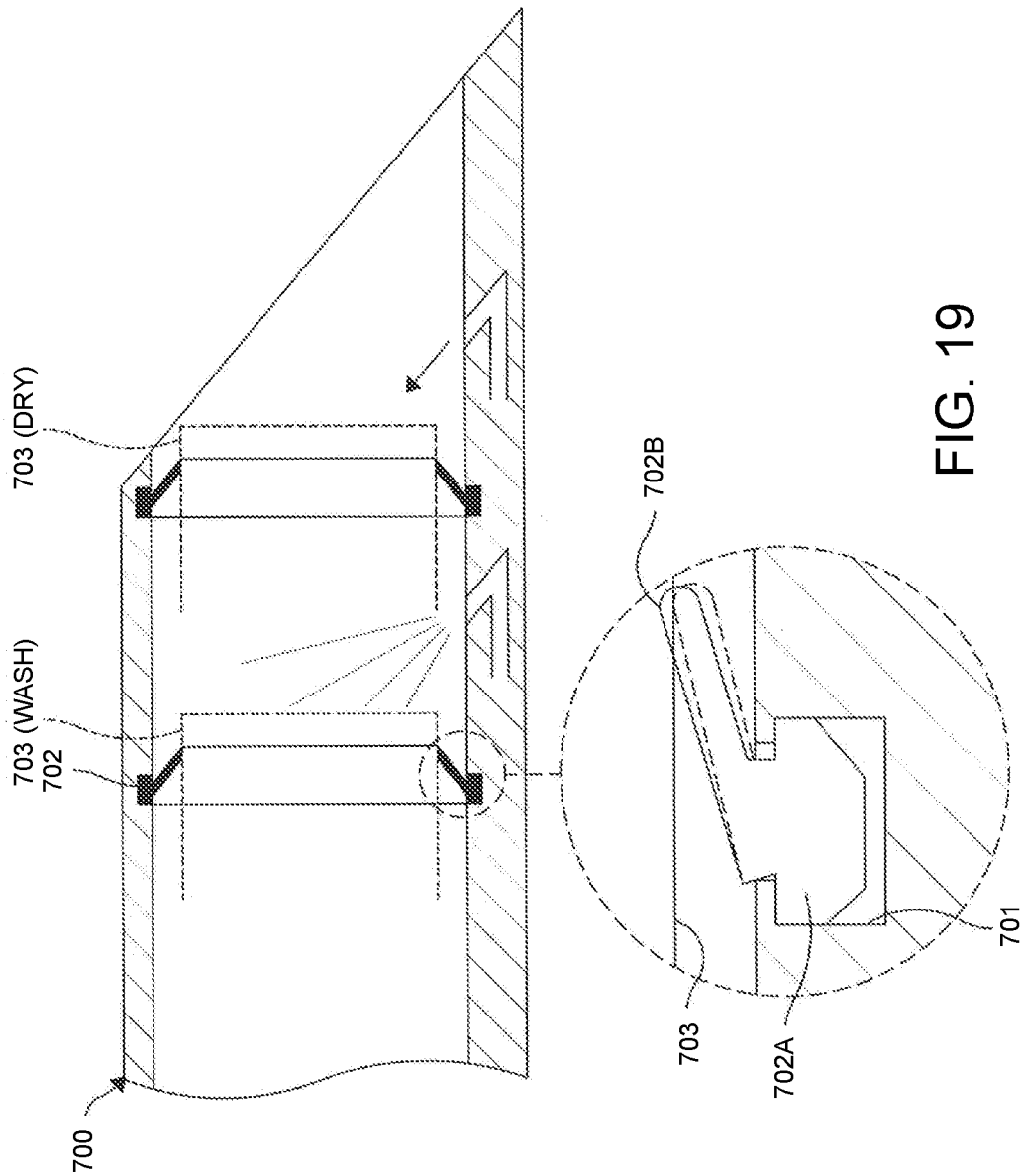

FIG. 19

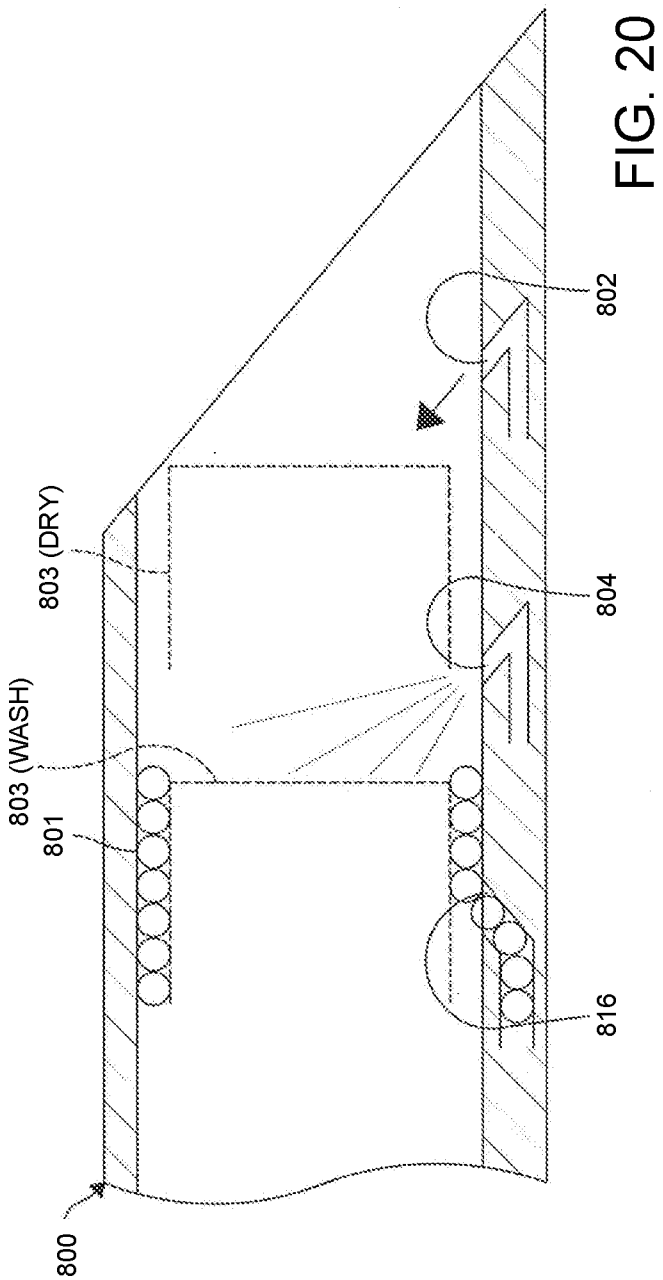

FIG. 20

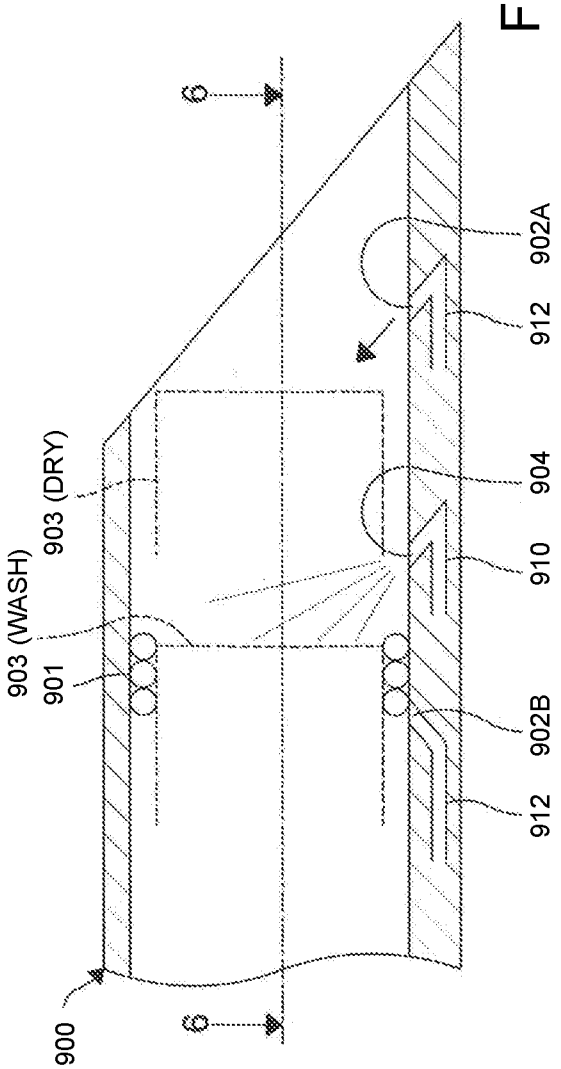

FIG. 21A

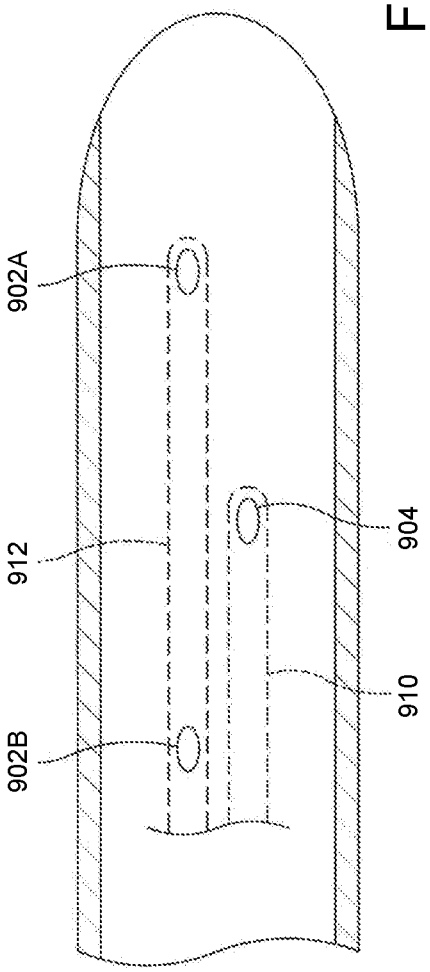

FIG. 21B

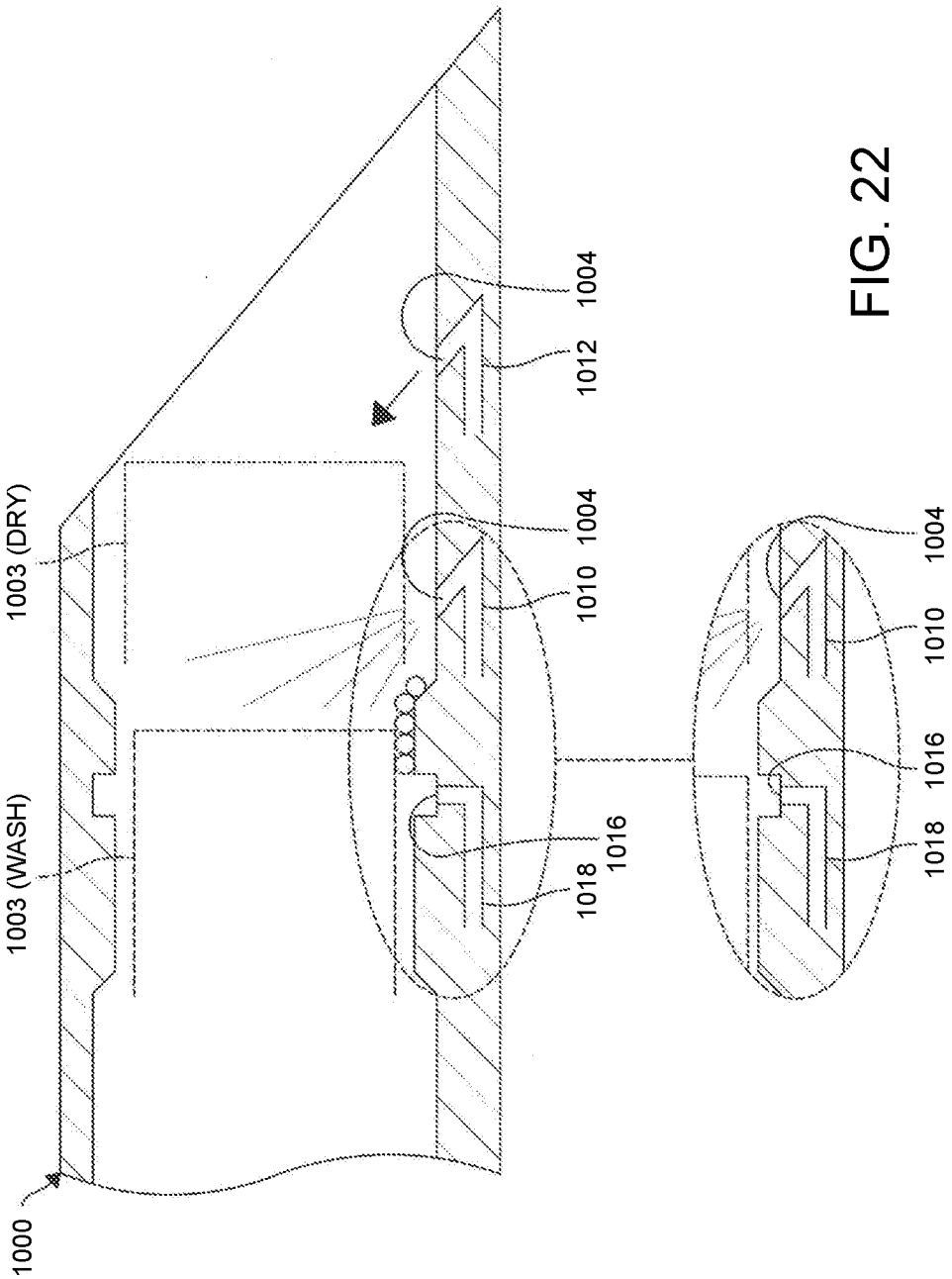
1003 (DRY)
1003 (WASH)
1000
1004
1012
1004
1010
1016
1018
1004
1010
1016
1018

FIG. 22

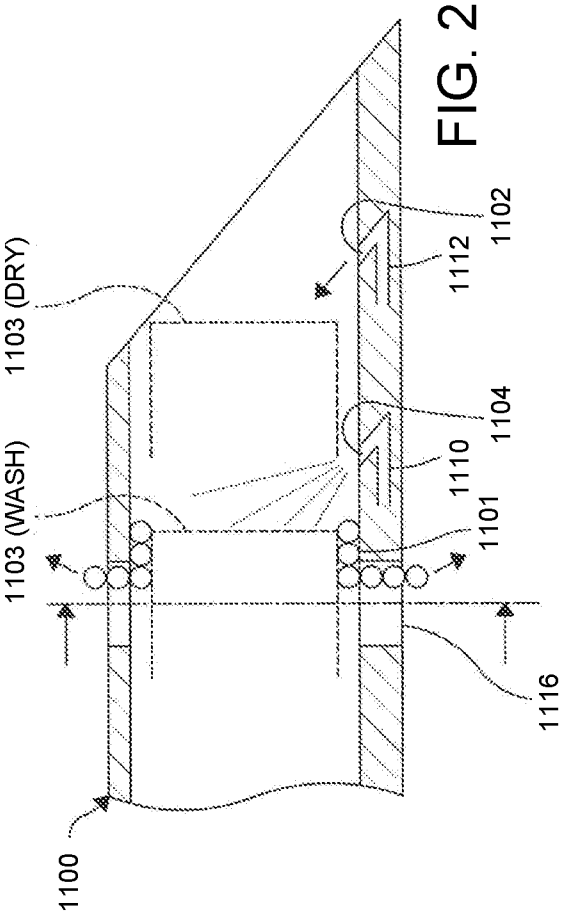

FIG. 23A

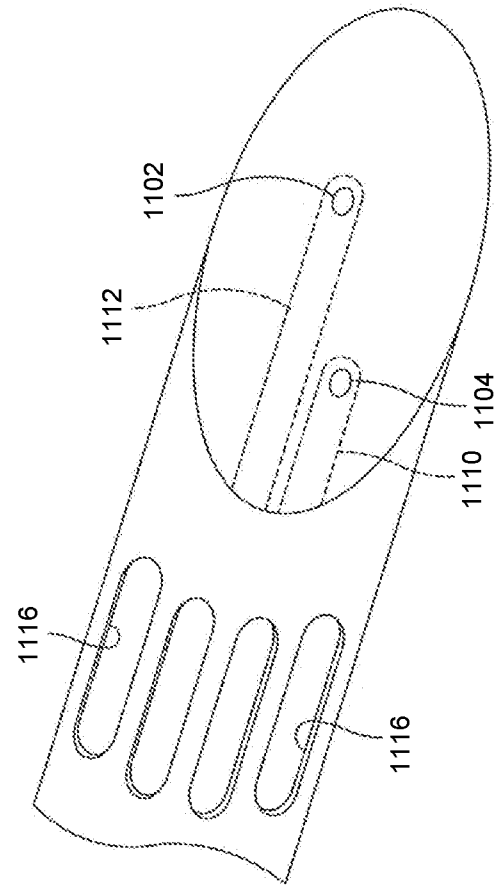

FIG. 23C

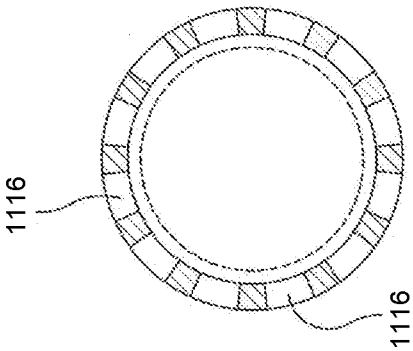

FIG. 23B

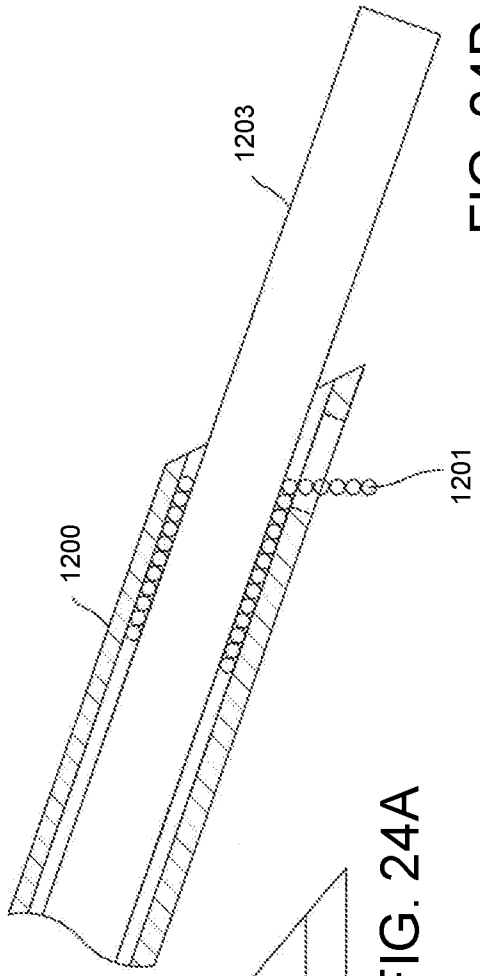

FIG. 24D

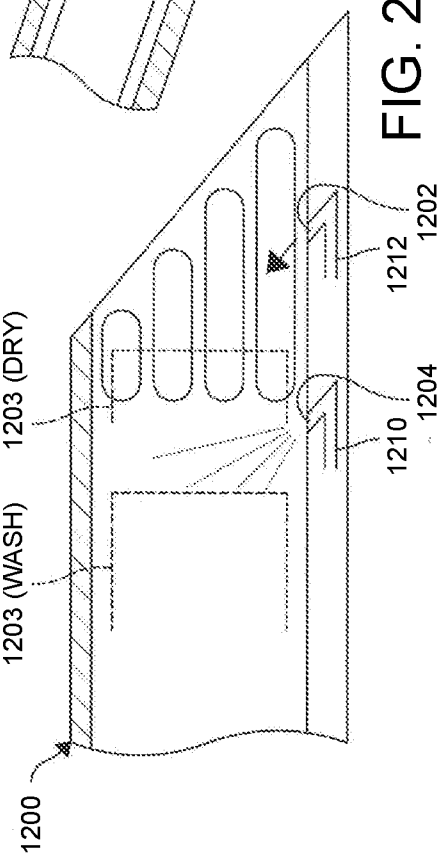

FIG. 24A

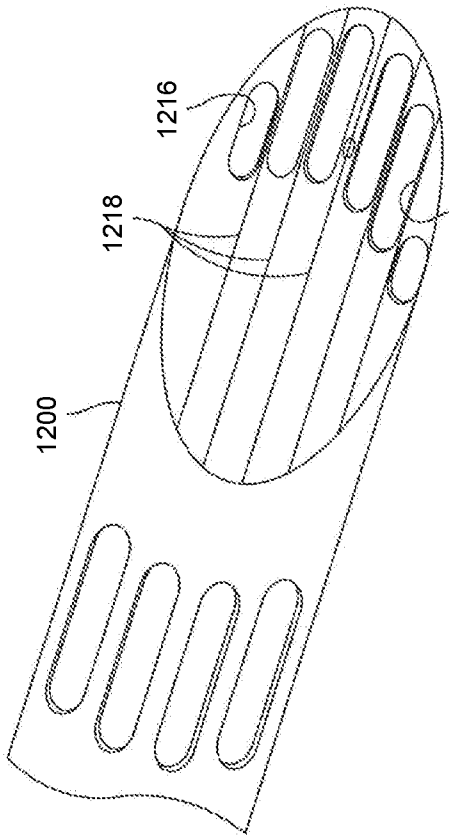

FIG. 24C

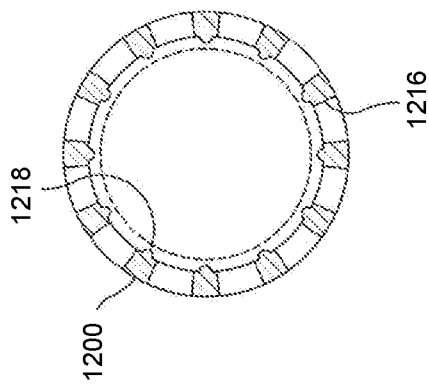

FIG. 24B

INTERNATIONAL SEARCH REPORT

International application No
PCT/US2021/030700

A. CLASSIFICATION OF SUBJECT MATTER
INV. A61B1/00 A61B1/12 A61B1/015 A61B17/34
ADD.

According to International Patent Classification (IPC) or to both national classification and IPC

B. FIELDS SEARCHED

Minimum documentation searched (classification system followed by classification symbols)
A61B

Documentation searched other than minimum documentation to the extent that such documents are included in the fields searched

Electronic data base consulted during the international search (name of data base and, where practicable, search terms used)
EPO-Internal, WPI Data

C. DOCUMENTS CONSIDERED TO BE RELEVANT

Category*	Citation of document, with indication, where appropriate, of the relevant passages	Relevant to claim No.
Y	US 2019/125176 A1 (BURT BRYAN M [US] ET AL) 2 May 2019 (2019-05-02) cited in the application	1-23, 25-28
A	the whole document	24
Y	US 2020/375444 A1 (COFFEEN JARED [US] ET AL) 3 December 2020 (2020-12-03)	1-23, 25-28
A	paragraphs [0139] - [0176]; figures 1-3	24
Y	US 2020/163541 A1 (HOLSTEN HENRY E [US]) 28 May 2020 (2020-05-28)	1-23, 25-28
A	paragraphs [0067] - [0080]; figures 1-6,13,14	24

☐ Further documents are listed in the continuation of Box C.

☒ See patent family annex.

* Special categories of cited documents :

"A" document defining the general state of the art which is not considered to be of particular relevance

"E" earlier application or patent but published on or after the international filing date

"L" document which may throw doubts on priority claim(s) or which is cited to establish the publication date of another citation or other special reason (as specified)

"O" document referring to an oral disclosure, use, exhibition or other means

"P" document published prior to the international filing date but later than the priority date claimed

"T" later document published after the international filing date or priority date and not in conflict with the application but cited to understand the principle or theory underlying the invention

"X" document of particular relevance;; the claimed invention cannot be considered novel or cannot be considered to involve an inventive step when the document is taken alone

"Y" document of particular relevance;; the claimed invention cannot be considered to involve an inventive step when the document is combined with one or more other such documents, such combination being obvious to a person skilled in the art

"&" document member of the same patent family

Date of the actual completion of the international search	Date of mailing of the international search report
14 January 2022	25/01/2022

Name and mailing address of the ISA/	Authorized officer
European Patent Office, P.B. 5818 Patentlaan 2 NL - 2280 HV Rijswijk Tel. (+31-70) 340-2040, Fax: (+31-70) 340-3016	Rick, Kai

INTERNATIONAL SEARCH REPORT

International application No.
PCT/US2021/030700

Box No. II Observations where certain claims were found unsearchable (Continuation of item 2 of first sheet)

This international search report has not been established in respect of certain claims under Article 17(2)(a) for the following reasons:

1. [X] Claims Nos.: 29-36
because they relate to subject matter not required to be searched by this Authority, namely:
see FURTHER INFORMATION sheet PCT/ISA/210

2. [ ] Claims Nos.:
because they relate to parts of the international application that do not comply with the prescribed requirements to such an extent that no meaningful international search can be carried out, specifically:

3. [ ] Claims Nos.:
because they are dependent claims and are not drafted in accordance with the second and third sentences of Rule 6.4(a).

Box No. III Observations where unity of invention is lacking (Continuation of item 3 of first sheet)

This International Searching Authority found multiple inventions in this international application, as follows:

1. [ ] As all required additional search fees were timely paid by the applicant, this international search report covers all searchable claims.

2. [ ] As all searchable claims could be searched without effort justifying an additional fees, this Authority did not invite payment of additional fees.

3. [ ] As only some of the required additional search fees were timely paid by the applicant, this international search report covers only those claims for which fees were paid, specifically claims Nos.:

4. [ ] No required additional search fees were timely paid by the applicant. Consequently, this international search report is restricted to the invention first mentioned in the claims;; it is covered by claims Nos.:

Remark on Protest

[ ] The additional search fees were accompanied by the applicant's protest and, where applicable, the payment of a protest fee.

[ ] The additional search fees were accompanied by the applicant's protest but the applicable protest fee was not paid within the time limit specified in the invitation.

[ ] No protest accompanied the payment of additional search fees.

FURTHER INFORMATION CONTINUED FROM PCT/ISA/ 210

Continuation of Box II.1

Claims Nos.: 29-36

For the assessment of the present claims 29-36 on the question whether they are industrially applicable, no unified criteria exist in the PCT Contracting States. The IPEA therefore is not required to carry out search and examination on these claims (Cf. Rule 67.1(iv) PCT). The patentability may be dependent upon the formulation of the claims. The EPO, for example, does not recognize as industrially applicable the subject-matter of claims to methods of treatment of the human or animal body by surgery or therapy and diagnostic methods practised on the human or animal body. The above claims pertain to a method for maintaining a clean endoscope in-situ during a surgical procedure inside a patient's body (See e.g. p. 1, l. 6-7 and p. 8, l. 10-28 of the description and Fig. 1). Thereby said method is rendered surgical, so that it might not be regarded as an invention susceptible of industrial application.

INTERNATIONAL SEARCH REPORT

Information on patent family members

International application No
PCT/US2021/030700

Patent document cited in search report	Publication date	Patent family member(s)	Publication date
US 2019125176 A1	02-05-2019	AU 2017253708 A1	06-12-2018
		CN 109661207 A	19-04-2019
		EP 3445262 A1	27-02-2019
		JP 6978431 B2	08-12-2021
		JP 2019523658 A	29-08-2019
		US 2019125176 A1	02-05-2019
		WO 2017184415 A1	26-10-2017
US 2020375444 A1	03-12-2020	US 2020375444 A1	03-12-2020
		WO 2020243270 A1	03-12-2020
US 2020163541 A1	28-05-2020	NONE	