June 29, 1937. W. ROHN 2,085,450

APPARATUS FOR PRODUCING METALLIC INGOTS

Filed March 13, 1935

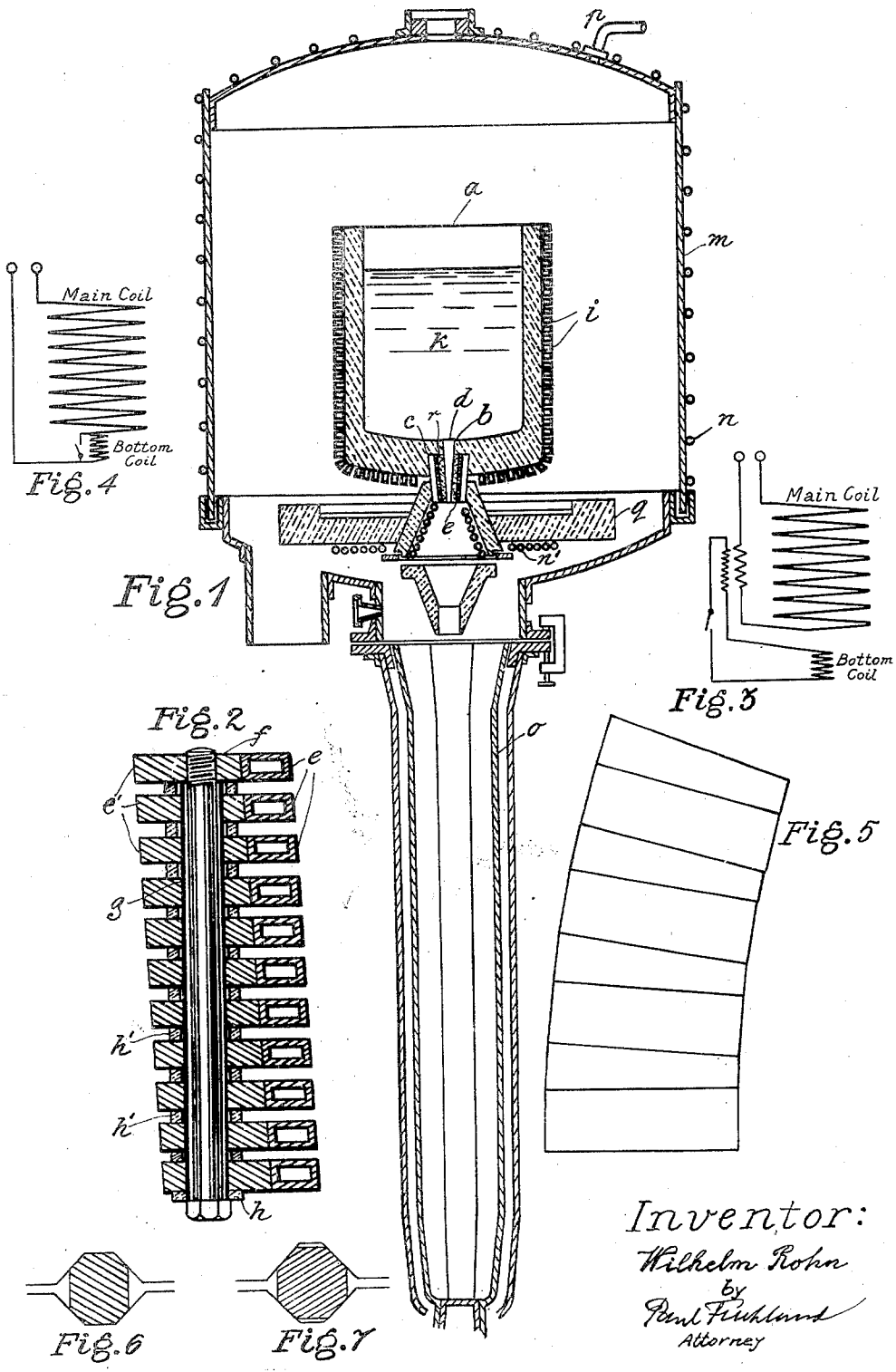

Fig. 1

Fig. 2

Fig. 3

Fig. 4

Fig. 5

Fig. 6

Fig. 7

Inventor:
Wilhelm Rohn
by
Paul Fuchland
Attorney

Patented June 29, 1937 2,085,450

UNITED STATES PATENT OFFICE

2,085,450

APPARATUS FOR PRODUCING METALLIC INGOTS

Wilhelm Rohn, Hanau-on-the-Main, Germany

Application March 13, 1935, Serial No. 10,895
In Germany April 23, 1934

2 Claims. (Cl. 22—57)

The object of this invention is to provide an apparatus by means of which easily workable metallic ingots of highest possible standard of qualities and at the same time free to a great extent from blow-holes, slag particles and non metallic inclusions may be produced. The apparatus comprises a melting furnace and a casting device. The melting furnace is constructed in such a manner that metals and alloys can be melted therein under the cleanest conditions in a vacuum and that especially a metal free from non metallic inclusions can be cast out of the furnace.

The casting device is constructed so as to produce from this clean metal cast ingots which are free from blowholes and shrinkage cavities and give an extremely high yield when rolled.

According to the invention metals and alloys are melted in and cast from a coreless induction furnace which is enclosed together with a casting device in a chamber capable of being evacuated. It is well known that by melting in a rarefied atmosphere metals and alloys can be obtained which are distinguished by high-grade purity.

The invention will now be more fully described with reference to the annexed drawing of which

Fig. 1 is a vertical cross-sectional view of a smelting and casting device constructed according to the invention;

Fig. 2 is a detail showing on an enlarged scale the construction of the bottom coil in vertical cross-section;

Figs. 3 and 4 are diagrams showing two different methods of electrically connecting the main coil and the bottom coil.

Fig. 5 is a diagrammatic plan view showing in exaggerate proportions a development of the surface of an octagonal mold.

Fig. 6 is a diagrammatic view showing the ingot in its preferable form between the rolls.

Fig. 7 is a similar view with an ingot in a less advantageous form.

The furnace *a* is provided with a discharging opening or tap-hole *b* in a ceramic tubular body *r* inserted in the bottom which is surrounded by an especial induction coil *c* (hereafter termed "bottom coil"). By means of the latter a plug *d* in the tap-hole remaining solid during the melting operation is fused at the end of the smelting period whereby the tap-hole *b* is opened. Preferably this coil for heating the tap-hole is combined with or consists of a water-cooled pipe *e* (Fig. 2) to serve as a cooling implement during the melting and, if desired, during the discharging operation and to protect thereby the lining near the tap-hole. The pipe *e* may be soldered or welded together with the coil *c*. The windings of the latter may be fixed by a screw *f* penetrating all of the windings and insulated by a tube *g* and a washer *h*. The windings are spaced by insulating pieces *h'*. If not an alternating current of a higher frequency is to be supplied to the bottom coil *c* than to the main coil *i*, the bottom coil surrounding the tap-hole is preferably energized from the same source as the induction coil which heats the contents *k* of the furnace and is hereafter termed "the main coil *i*". The bottom coil may be connected in series with the main coil *i* and may be capable of being disconnected (Fig. 4), or the energy may be supplied to the bottom coil *c* from the line feeding the main coil *i* by means of a transformer capable of being disconnected (Fig. 3). When the bottom coil *c* and the main coil *i* are connected in series a special device for disconnecting the bottom coil must be provided to interrupt their action during the melting period. The size of the tap-hole *b* and the plug *d* placed therein depends upon the speed of the pouring wanted. For slow casting the diameter of the hole *b* and the plug *d* should be small and then a higher frequency will be needed to make the casting device work whereas for higher speed of casting and therefore larger diameter of hole and plug a lower frequency or even the same as for the operation of the melting device may be used.

To make the bottom coil as rigid and strong as possible the copper tube *e* may be united with a solid copper strip *e'* as seen from the drawing (Fig. 2). Through this strip holes may be bored through which the insulated bolts *f* are passed which hold the coil together—the windings being spaced by insulating pieces *h'*.

The furnace *a* is surrounded by a jacket *m* provided with an evacuating pipe *p*. The jacket *m* may preferably be constructed of non-metallic material, as, for instance, of paper impregnated with artificial resin, or fabric, or asbestos impregnated with artificial resin, i. e. materials of the bakelite type. However, also a metallic jacket may be employed, a sufficient distance being left between the jacket and the main coil. The jacket may be cooled by a coil *n*.

To prevent the molten metal from breaking through the bottom, the cooled main coil is extended over the bottom of the melting vessel. Contrary to former expectations, the inventor has ascertained that ruptures are surely pre-

vented by a cooling device of this kind, provided that the copper tubes are closely wound and cover the whole bottom of the furnace. The base plate *q* of the furnace which consists e. g. of bakelite may be protected against the heat radiation from the running jet and the hot metal in the mold by a cooling device *n'* consisting, for instance, of copper tubing to which cooling water may be supplied.

In a furnace as described it is not only possible when working in vacuo to expel all contaminations from the metals or alloys to be melted, but also to allow the metal to settle and not only the slag but also all microscopic non-metallic inclusions to rise to the surface after the melting or refining is completed. When then discharging the metal through the bottom, there is no risk of the slag recontaminating the metal during the casting operation, as is the case when casting over a spout. Therefore a metal is obtained from which the contaminations have been expelled by melting it in vacuo, and a subsequent contamination by the slag during the casting operation is excluded. By discharging the metal out of the melting chamber itself the loss of temperature of the metal and the renewed stirring up of the slag resulting from the tilting of the melting furnace are avoided. Furthermore the melt is equilibrated with the lining of the furnace during the whole time of the melting operation, whereas with casting the metal into a ladle renewed reactions between the metal and the lining of the ladle would take place, and more especially by the decomposition of the slightest traces of moisture contained in the lining of the ladle hydrogen would be introduced into the metal bath resulting in the formation of blow holes during the solidification.

This extremely pure metal is now to run into a mold *o* located below the discharge opening of the furnace. Preferably water-cooled cone-shaped molds are employed to avoid the formation of shrinkage cavities on casting.

As the slag swims upon the metal bath, it is possible to make the metal run into the molds in a clean state. The casting speed regulates itself automatically during the tapping by the amount of molten metal just contained in the furnace and is greater in the beginning and is reduced towards the end. This is quite desirable, as towards the end of the casting it is important to gradually fill out the cavity which might have been formed by the shrinking of the metal in the mold.

The casting speed may be regulated by suitably choosing the diameter of the plug *d*. As no deterioration of the metal can take place when casting in vacuo, the cast may be effected very slowly, whereby the most favorable structure is obtained resulting not only in the absence of blow-holes but also which is still more important, the absence of shrinkage cavities.

In order to most economically work up these ingots which have been produced as pure and as free from blow-holes as possible, we may go one step farther in giving the molds, in addition to their conical shape, a cross-section being not circular, but corresponding with the grooves or caliber of the rolls of the cogging mill on which the first rolling shall be carried out. For instance, when the caliber is an octagon, the cross-section of the mold will be made octagonal. Hereby is attained that the caliber of the rolls is completely filled out with the material already in the first pass as shown in Fig. 6, and consequently pressure is exerted during the rolling upon all sides of the ingot to be rolled. On the contrary, when the cross-section of the ingot to be rolled does not correspond with the caliber of the rolls, hollow spaces as shown in Fig. 7 are formed between the ingot and the roll at the upper and the lower contour of the roll caliber. The material to be rolled is not under pressure at these points and therefore liable to form cross-fissures.

For instance, an octagonal casting mold is conically shaped in such a way that each two non-adjacent faces of the octagonal mold have parallel edges of the same width as the ground and the faces between them are tapered from one end of the mold to the other, (see the development, Fig. 5). For instance, by choosing the cross-section in such a way that the width of the rectangular faces of the ingot just fits into the sole of the grooves of the rolls in Fig. 6, we attain that, on rolling, the caliber from the beginning to the end of the ingot is practically filled with metal and the waste becomes very little.

By means of the above described melting and casting implement it is therefore possible to produce metallic materials of the highest purity and to work them up with the best possible yield.

I claim:—

1. In a coreless electric induction furnace for casting metallic ingots provided with a tap-hole and a metallic plug closing the tap-hole, a coil surrounding the tap-hole and the said plug and adapted to be supplied with an alternating current to melt down the said plug at a predetermined time just before casting the metal.

2. A melting and casting device comprising a coreless electric induction furnace forecasting metallic ingots provided with a tap-hole and a metallic plug closing the tap-hole, a mold arranged with its center under the tap-hole, and a coil surrounding the tap-hole and the said plug and adapted to be supplied with an alternating current to melt down the said plug at a predetermined time just before casting the metal from the furnace into the mold.

WILHELM ROHN.