April 9, 1946. K. OGANOWSKI 2,398,034

TREATMENT MEANS AND METHOD FOR HOT COATED STRIP

Filed May 11, 1943

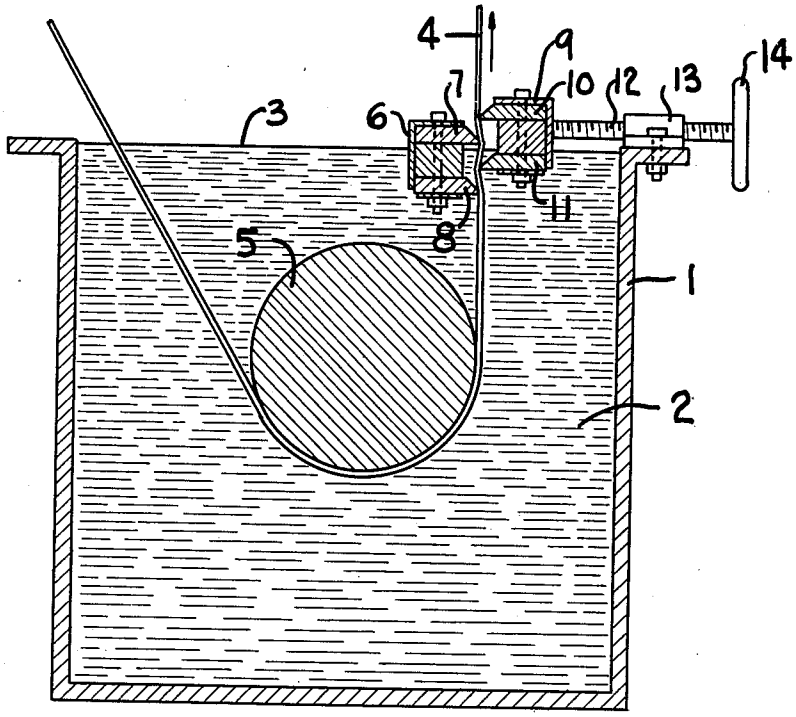

FIG 1

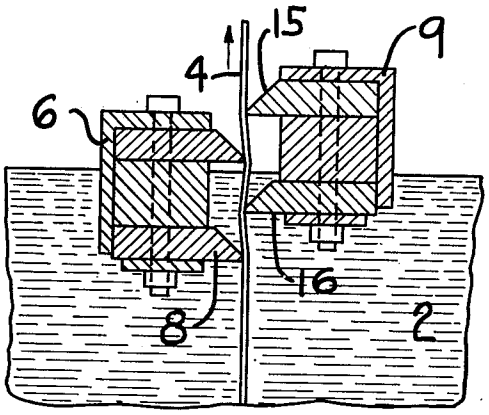

FIG 2

Inventor
KASIMIR OGANOWSKI

By Allen & Allen
Attorneys

Patented Apr. 9, 1946

2,398,034

UNITED STATES PATENT OFFICE

2,398,034

TREATMENT MEANS AND METHOD FOR HOT COATED STRIP

Kasimir Oganowski, Franklin, Ohio, assignor to The American Rolling Mill Company, Middletown, Ohio, a corporation of Ohio

Application May 11, 1943, Serial No. 486,536

4 Claims. (Cl. 117—102)

My invention relates to the problems of treating hot coated strip as it emerges from a metal coating bath in order to control the accuracy and thickness of the coating. Hitherto in most such operations the use of so-called exit rolls has been common, except in certain instances where for various reasons their use has been impossible. But exit rolls have certain inherent defects. They do not, in the first place, tend to produce an absolute uniformity of coating thickness. In the second place, they can be employed only to control the thickness within certain comparatively narrow limits, and have not been found effective in the production of extremely light metal coatings. They usually involve a definite problem of keeping them clean, and their tendency is, of course, to roll into the coating such extraneous matter as may be present.

The principal objects of my invention have to do with the provision of a structure and mode of operation whereby these difficulties can be avoided. It is an object of my invention to provide a treatment apparatus which tends toward greater cleanliness of the coated strip and is effective in removing foreign particles rather than in imbedding them. It is an object of my invention to provide a treatment structure and method whereby thinner coatings can be uniformly imposed upon metal strip.

These and other objects of my invention which will be set forth hereinafter or will be apparent to one skilled in the art on reading these specifications, I accomplish by that certain structure and arrangement of parts and in that procedure of which I shall now set forth an exemplary embodiment.

Reference is made to the accompanying drawing in which:

Figure 1 is a sectional view of a coating pot embodying my treatment apparatus.

Figure 2 is a sectional view of the treatment means on an enlarged scale to show more clearly its relationship to the workpiece in an exemplary mode of use.

The nature of the hot coating process as such forms no necessary limitation upon my invention, nor does the nature of the metal base strip or the nature of the molten coating metal. My invention is applicable to procedures in which metallic strip is hot coated with tin, terne, zinc, aluminum and the various metals and alloys susceptible of use in hot coating procedures. The nature of the coating equipment and attendant apparatus, and the nature of such pre-treatments of the metal strip as may be employed likewise do not affect the utility of my invention, excepting that my apparatus may perform additional functions in connection with particular procedures. An exemplary coating procedure and apparatus is that described in the patent to Sendzimir, No. 2,110,893, issued March 15, 1938, wherein a metal strip is first given a thin and controlled surface film of oxide and then is passed through a furnace having a reducing atmosphere. From this furnace it passes into the bath of molten coating metal without being re-exposed to an oxidizing atmosphere, and for this reason no fluxing is required. My invention may also be employed in connection with procedures involving the use of an entrance flux. It may be employed in connection with procedures involving the use of exit flux or not as the particular exigency of the coating process may require. It can be employed where the coated strip is led out of the coating bath directly into the air, or with other procedures where the exit end of the coating bath is maintained in a non-oxidizing or reducing atmosphere. It may even be employed with coating baths on the surface of which a film of heavy oil is maintained. All of these conditions do not affect the basic operation of my structure and will hereinafter not be discussed.

Briefly in the practice of my invention I provide a plurality of blades or wipers contacting the strip from both sides. These blades are staggered. It is convenient to make all of the blades on one side of the strip a part of a single structure which is slidably mounted with respect to the coating pot and which has adjustment means so that its position may be varied. The other structure may be similarly mounted if desired, or it may be fixed in space. By reason of the staggered position of the blades and the adjustment means aforesaid, the blades may be brought into a partially interdigitating position, so that the strip is deflected a plurality of times as it passes the blades. It is preferred that one pair of blades at least be located beneath the surface of the molten coating metal, while another pair of blades at least is located above that surface in air, oil, molten flux or other medium. Under certain conditions of operation, however, both pairs of blades may be above the liquid level, especially when running light gauge material. The shape of the contacting blade edges is likewise important, as will hereinafter be set forth.

Referring to Figure 1, I have shown in a diagrammatic way a coating pot 1, containing a

quantity of molten coating metal 2, having a level indicated at 3. The strip 4 moving in the direction indicated by the arrow is shown as entering the coating pot, passing beneath a return roll 5 and leaving the coating pot between the wiping structures, next to be described. One of these structures, indicated at 6, has a pair of spaced blades 7 and 8. This structure may be fixed in position to the pot or to some supporting structure. Another structure 9 has blades 10 and 11. It may be slidably mounted in suitable ways (not shown), and its position may be varied by means of one or more threaded shafts 12 engaging the structure 9 and passing through a threaded block or blocks 13 on a fixed support, such as the edge of the pot itself. The shaft may be provided with a hand wheel 14. Other modes of mounting the structure 9 so that its position may be shifted in a horizontal plane can be adopted.

As indicated, the structures 6 and 9 are preferably so positioned that blades 8 and 11 lie beneath the surface of the molten coating metal 2, while blades 7 and 10 lie above it. As to the shape of the blades, it will be noted from Figure 2 that they may be beveled above, as at 15, and straight below, as at 16. The specific shape of the blade edges may be considerably varied, the important feature being that the angle of attack of the blade on the strip as the strip approaches the blade should not be substantially less than 90 degrees. This will be clear from Figure 2. When the angle between the strip and the blade face approached by the strip is close to 90 degrees or larger, the blade edge toward which the strip moves will have the tendency to remove foreign matters from the strip surface rather than to imbed them in the coating.

The submerged blades 8 and 11 serve a double purpose. They remove foreign particles on the sheet surface before the coated strip is exposed to the cold air and while the strip surfaces are surrounded by molten metal, which will aid in washing away the foreign particles. Also the submerged blades produce a deflection of the strip.

The unsubmerged blades 7 and 10 accomplish the actual wiping of the coating after the strip has left the molten coating bath. The deflection of the strip as it passes the staggered blades insures a uniform contact of the strip with each blade under substantially uniform pressure. This produces the desired uniformity of the wiped coating and makes my blades more effective in producing uniform, thin coatings than the treatment devices heretofore proposed in the art. While I have shown a pair of blades on each side of the strip, the number of blades forms no limitation on the broader aspects of my invention, and blades may be multiplied as desired. If two blades only are employed, one on each side of the strip they should, of course, be located above the surface of the molten coating metal.

The pressure of the wiping action may be controlled both by the position of the several staggered blades and by the tension on the metal strip as it passes through the apparatus. In this way the thickness of the coating can be accurately gauged. A singular advantage of the construction and mode of operation is that the strip is caused to contact the wiper blades in spite of such variations as may be encountered in the profile of the strip. This is not possible with rolls.

The material used for the wiper blades can be widely varied. The requirements are that it should have sufficient strength at the temperature of the molten metal, that it must be essentially inert to the metal or at least not rapidly attacked by it, and it must be tough enough to give good wear under the particular circumstances of use. The blades may be made of metal fulfilling these requirements; but they may also be made of non-metallic substances. For example, in ordinary galvanizing, such material as transite board or other relatively dense and strong fibrous substances may be employed; and it is advantageous to impregnate them with tallow. Molded plastics not affected by the temperatures of use may likewise be employed. The structures 6 and 9 instead of being integral may, if desired, comprise holding parts with attachable and detachable blades of the same or different substance.

Modifications may be made in my invention without departing from the spirit of it. Having thus described my invention, what I claim as new and desire to secure by Letters Patent is:

1. A process of treating the surfaces of hot coated metal strip as the strip emerges from a bath of molten coating metal, which comprises providing on each side of the strip a plurality of spaced blades having contacting edges staggered as respects their lines of contact with the strip surfaces, producing sufficient interdigitation of said edges to cause a deflection of the strip as it passes said edges, and drawing the strip under tension between said contacting edges under such circumstances that the molten coating metal is still in liquid condition on the surfaces of said strip as contacted by said edges, maintaining a blade on each side of said strip beneath the surface of said molten coating metal while another blade on each side of the strip lies thereabove.

2. A process of treating the surfaces of hot coated metal strip as the strip emerges from a bath of molten coating metal, which comprises providing on each side of the strip a plurality of spaced blades having contacting edges staggered as respects their lines of contact with the strip surfaces, producing sufficient interdigitation of said edges to cause a deflection of the strip as it passes said edges, and drawing the strip under tension between said contacting edges under such circumstances that the molten coating metal is still in liquid condition on the surfaces of said strip as contacted by said edges, while maintaining a blade on each side of said strip beneath the surface of said molten coating metal while another blade on each side of the strip lies thereabove, the several blades having faces adjacent said edges, the faces on the sides of said blades approached by said strip being substantially normal to the general path of said strip and the faces on the other sides of said blades being acutely beveled.

3. In combination with a metal coating pot containing a quantity of molten coating metal, means for passing a strip to be coated through said pot, and means for treating the coated surface of said strip as it emerges from said molten coating metal and prior to the solidification of said coating metal on its surfaces, said means comprising a plurality of spaced wiper blades on each side of said strip, means for supporting said blades in staggered relationship, and adjustable means for producing an interdigitation of said blades to the extent of causing a deflection of said strip as said strip is drawn between said blades, whereby the surfaces of said strip may be maintained in contact with said blades in spite

of variations in the profile of said strip, said blades having faces which form with the approaching strip an angle not substantially less than 90 degrees, and having narrow contacting edges, said supporting means acting to support at least one blade on each side of said strip beneath the surface of said molten coating metal and at least one blade on each side of said strip above the surface of said molten coating metal.

4. A process of treating hot coated metal strip prior to the solidification of the coating which comprises contacting the coated strip with a plurality of spaced wiper blades on one side and at least two wiper blades on the other, and positioning the blades so that the strip is deflected from a rectilinear path as it passes between them, and withdrawing the said strip from a bath of molten coating metal between the said blades whereby to cause the blade edges accurately to contact the surface of the strip, some at least of the blades being so configured and positioned as to have faces which form with the strip as it approaches them an angle not substantially less than 90°, and positioning at least one blade on each side of the strip beneath the surface of the molten coating metal while positioning at least one other blade on each side of the strip above the surface of the molten coating metal.

KASIMIR OGANOWSKI.