Oct. 1, 1968 LE ROY J. ROSSOW 3,403,933

MAGNETIC LATCH

Filed Dec. 15, 1966

FIG. 1

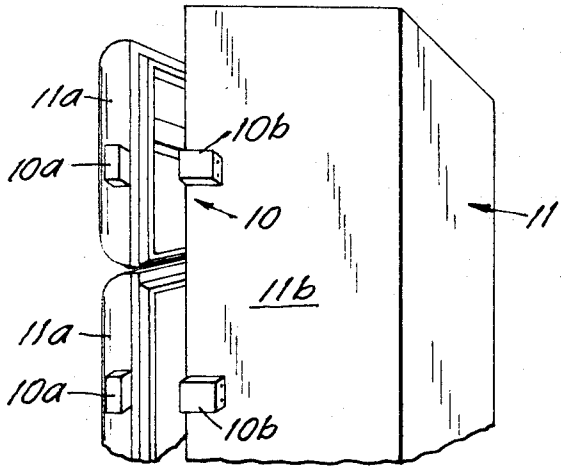

FIG. 2

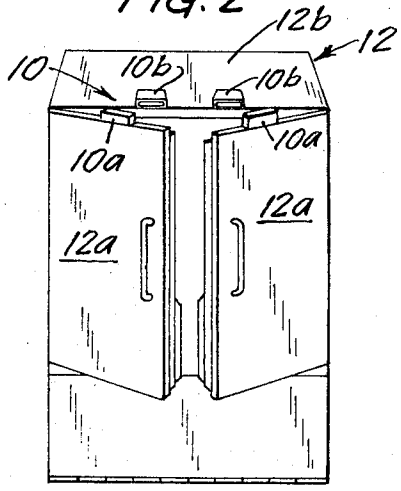

FIG. 3

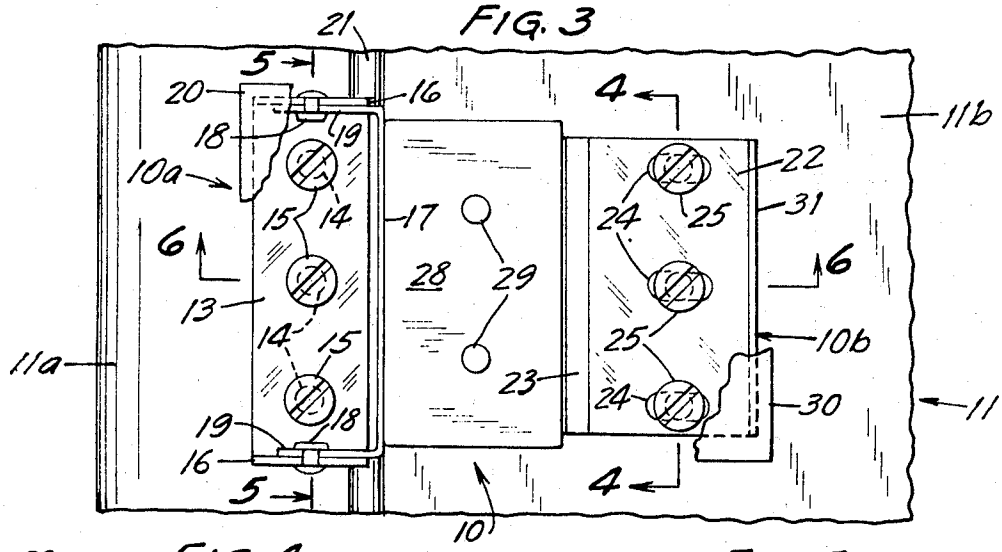

FIG. 4

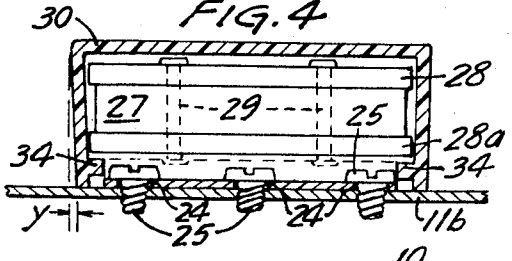

FIG. 5

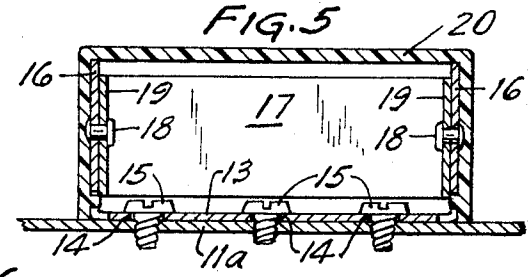

FIG. 6

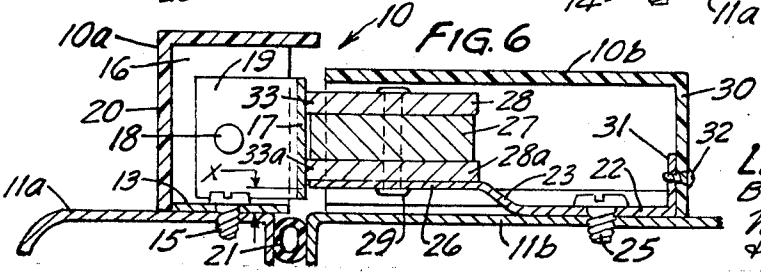

INVENTOR
LEROY J. ROSSOW
BY
Williamson, Palmatier & Bains
ATTORNEYS

United States Patent Office 3,403,933 Patented Oct. 1, 1968

3,403,933

MAGNETIC LATCH

Le Roy J. Rossow, 857 Rice St.,
St. Paul, Minn. 55117

Filed Dec. 15, 1966, Ser. No. 602,037
6 Claims. (Cl. 292—251.5)

This invention relates to a magnetic latch, and more particularly, relates to a self-aligning magnetic latch adapted to be mounted on the exterior of a refrigerator.

Often times, in the repair of older model refrigerators, a replacement latch is necessary to provide for proper closing of the refrigerator. The serviceman, in servicing older model refrigerators, is often faced with attempting to repair a handle in that replacement parts have long since become unavailable. This repair is often costly but must be carried out to properly service the refrigerator for efficient operation. The mechanics of the refrigerator, except for the mechanical latch, are such that the life of the refrigerator is almost indefinite. Consequently, many makes and models of older refrigerators are presently in use and in need of closures which will tightly close the units to provide proper efficiency. However, the serviceman who deals in refrigerator repair cannot possibly stock replacement handles for all of the makes and models which he may be called upon to repair and, of course, many of the latches are no longer available.

Although universal-type latches have been developed as replacement parts for obsolete refrigerator latches, many are not truly universal, and others are extremely difficult to install and require special tools. Other of the universal-type latches presently available are not only costly, but unless meticulously installed do not provide proper closure of the refrigerator door and, consequently, do not provide for optimum efficiency of the refrigerator on which the latch is installed.

With these comments in mind, it is to the elimination of these and other disadvantages to which the present invention is directed, along with the inclusion therein of other novel and desirable features.

An object of my invention is to provide a new and improved magnetic latch for exterior mounting on refrigerators, which latch is of simple and inexpensive construction and operation.

Another object of my invention is to provide a novel magnetic latch which is self-aligning thereby compensating for variances in the door of the refrigerator and permitting optimum closure of the door.

Still another object of my invention is the provision of an improved and novel magnetic latch for exterior mounting on refrigerators which may be mounted on right- or left-hand doors and which may be mounted on the top or side of the unit.

A still further object of my invention is the provision of an improved magnetic latch which may be quickly and efficiently installed by a person of minimum skill or manual dexterity.

An additional object of my invention is the provision of an improved magnetic latch which may be installed on any existing refrigerator or freezer, a latch which is not mechanical and therefore not subject to breakdown of wearing parts and a latch which includes a cooperating housing which not only matches most refrigerators or freezers but which contributes to the efficiency of the latch.

These and other objects and advantages of my invention will more fully appear from the following description made in connections with the accompanying drawings wherein like reference characters refer to the same or similar parts throughout the several views, and in which:

FIG. 1 is a diagrammatic sketch showing a typical usage of my magnetic latch;

FIG. 2 is a diagrammatic sketch showing an additional typical usage of my magnetic latch;

FIG. 3 is a front view of the magnetic latch of my invention shown installed on a refrigerator having the door closed and with the latch housing broken away for clarity;

FIG. 4 is a sectional view taken along the line 4—4 of FIG. 3;

FIG. 5 is a sectional view taken along the line 5—5 of FIG. 3; and

FIG. 6 is a sectional view taken along the line 6—6 of FIG. 3.

One form of the present invention is shown in the drawings and is described herein. The magnetic latch of my invention is shown in FIG. 1 and is indicated, in general, by numeral **10**. The latch **10** is shown attached to a refrigerator, indicated in general by numeral **11**. Latch **10** comprises a striker plate assembly **10***a* shown attached to a refrigerator door **11***a* and cooperating magnetic unit **10***b* shown attached to the stationary box portion **11***b* of refrigerator **11**. Another type of installation is shown in FIG. 2 with the magnetic latch **10** attached to refrigerator **12** on top of the unit rather than on the side of the refrigerator as in refrigerator **11**. The striker plate assembly **10***a* is mounted on door **12***a* of refrigerator **12** and the magnet unit **10***b* is mounted on the top stationary panel **12***b* of refrigerator **12**. It should be noted that my magnetic latch may be attached to the side of a right- or left-hand opening door and may be attached to the top of a right- or left-hand opening door without any adjustment whatsoever to the magnetic latch at either the striker plate assembly **10***a* or the magnet unit **10***b*.

In FIG. 3, the magnetic latch **10** is shown attached to a refrigerator in the closed position. It should be noted that the magnetic latch does not interfere with the door seal and is mounted on the exterior of the refrigerator. The striker plate assembly comprises a door mounting bracket **13** having three openings **14** therein whereby mounting screws **15** may be received for attachment to the door **11***a*. Bracket **13** is U-shaped and includes outwardly projecting, opposed parallel flanges **16** adapted to receive striker plate **17**. Striker plate **17** is pivotally mounted on flanges **16** of door mounting bracket **13** by rivets **18** providing pivotal movement to striker plate **17** about an axis which is parallel to the striker plate **17**. Striker plate **17** is essentially U-shaped and includes flanges **19** which mate with flanges **16** of the door mounting bracket for mounting thereto. The striker plate and door mounting bracket are typically formed from a hot rolled, zinc-plated steel. Striker plate assembly housing **20** is detachably mounted on the striker plate door mounting bracket surrounding bracket **13** and covering it as well as mating with the door **11***a* of the refrigerator **11**. The housing **20** is detachably mounted by a press fit relation with rivets **18** and the housing **20** is open to expose striker plate **17**. The housing is constructed from a molded impact-resistant plastic.

The magnet unit **10***b* is shown mounted to the stationary box portion **11***b* of refrigerator **11**. It should be noted that door **11***a* is tightly closed by the latch **10** properly engaging seal **21** between the door **11***a* and stationary box portion **11***b*. The magnet unit comprises a magnet unit mounting plate **22** which is angulated at panel **23** to provide an offset portion spaced apart from stationary box portion **11***b*. The magnet unit mounting plate includes slotted openings **24** which receive screw assemblies **25** therein. The slots are oriented with the longitudinal axis substantially normal to the door opening of stationary box **11***b* to provide movement forwardly toward the door opening or rearwardly from the door opening to provide proper alignment of the magnet unit relative to the striker plate assembly. Magnet unit mounting plate **22** includes

a magnet-receiving portion **26** which receives magnet **27** with an outer pole **28** and an inner pole **28***a* sandwiching the magnet therebetween. A rivet **29** secures poles **28** and **28***a* with magnet **27** therebetween together and onto the magnet-receiving portion **26** of magnet unit mounting plate **22**. It should be noted that offset portion **23** of magnet unit mounting plate **22** positions the magnet-receiving portion away from the outer wall of stationary box **11***b* a distance indicated by the dimension X. Housing **30** is constructed of an impact-resistant molded plastic and covers the magnet assembly and magnet unit mounting plate and is secured to the magnet unit mounting plate at the upright flange **31** as by screw assemblies **32**. The housing covers the unit and is flush with the stationary box **11***b* while exposing forward edge portions **33** and **33***a* of poles **28** and **28***a*, respectively, to mate with striker plate **17**. Poles **28** and **28***a* are typically constructed of a cold rolled steel and are zinc plated. The magnet unit mounting plate is aluminum and therefore does not affect the forces of magnet **27** which is constructed from a rubber which is impregnated with barium ferrite. The rivet **29** is aluminum to permit optimum efficiency of the magnet **27**.

Referring to FIG. 4, housing **30** includes shoulder **34** which engages inner pole **28***a* retaining the magnetic pole **28***a* away from the refrigerator **11***b* so that poles **28** and **28***a* efficiently contact striker plate **17** with maximum force. Further, shoulder **34** prevents flexing of the magnet unit mounting plate **22** at offset portion **23** from the force of the poles **28** and **28***a* generated by the traction of the door **11***a* or stationary box **11***b* for the magnetic poles. This, of course, prevents any bending action at offset plate **23** thereby eliminating metal fatigue at that point. It should be noted that housing **30** converges a dimension indicated by Y so that shoulders **34** are snugly positioned under inner magnetic pole **28***a* properly spacing inner pole **28***a* away from the refrigerator **11** under all conditions.

In operation, the magnetic latch of my invention may be installed on a refrigerator accurately and for optimum operation with a maximum of ease. The striker plate assembly **10***a* is first attached to the door of the refrigerator. The striker plate assembly is attached to the door with the striker plate **17** parallel with the door opening. The door mounting bracket **13** is positioned on the side of the door and a hole is drilled into the door **11***a* at the middle opening **14** of door mounting bracket **13**. Screw **15** is then assembled thereto so that the striker plate may pivot somewhat about screw **15**. The striker plate assembly is located midway between the top and bottom of the door on which it is attached. Next, magnet unit **10***b*, with housing **30** removed, is positioned on the door with the forward edges **33** and **33***a* of inner and outer magnetic poles **28** and **28***a* in contact with striker plate **17**. The door is now closed tightly with seal **21** properly positioned between door **11***a* and stationary box **11***b*. The magnet unit mounting plate is then secured to the stationary box **11***b* by drilling into the refrigerator stationary box **11***b* at the middle opening **24** of the magnet unit mounting plate **22**. The middle screw assembly **25** is then secured tightly thereon and the alignment of the mating surfaces of the striker plate **17** against edges **33** and **33***a* of poles **28** and **28***a*, respectively, are set such that there is a straight and flush contact therebetween. Of course, the striker plate **17** will align itself about pivots **18** to provide an axis of rotation parallel to the door opening such that the straight and flush contact between striker plate **17** and pole edges **33** and **33***a* is achieved in spite of poor alignment of door **11***a*. The door mounting bracket may be slidably moved forwardly or rearwardly in slotted holes **24** for obtaining maximum closing effect between door **11***a* and stationary box **11***b*. Finally, screw assemblies **15** are assembled to door **11***a* completing the attachment of door mounting bracket **13** thereto; and screw assemblies **25** are attached to stationary box **11***b* completing the assembly of the magnet unit mounting plate to the stationary box. Striker plate assembly housing **20** is then press fit onto the rivets **18** of bracket **13** and housing **30** is slid onto the magnet unit **10***b* with shoulders **34** positioned between lower pole **28***a* and the stationary box **11***b* such that the poles **28** and **28***a* are not drawn toward the refrigerator but rather drawn to the striker plate **17**. This, of course, prevents metal fatigue at the offset portion **23** of magnet unit mounting plate **22** which would be caused if the magnetic forces were drawn toward the refrigerator. The housing **30** is then assembled to the flange **31** of magnet unit mounting plate **22** by screw assemblies **32**.

From the foregoing it will be seen that I have provided an external magnetic latch which may be attached to refrigerators, whether right- or left-hand opening and whether top or side mounted. Further, the magnetic latch of my invention is self-aligning and is so designed that the magnetic forces are directed toward the striker plate rather than toward the refrigerator. Further, the housing on the magnet unit of my magnetic latch is so designed that the offset aluminum mounting bracket is not flexed and therefore does not break down under repeated use. Consequently, there is a minimum of moving parts and the magnetic latch life is therefore indefinite. No special tools are required to assemble my magnetic latch to a refrigerator and, further, my magnetic latch may be properly assembled to a refrigerator by a person of minimum skill or mutual dexterity. The operation of attaching my magnetic latch is such that an optimum installation may be obtained by one installing the latch with no previous experience. My magnetic latch is adjustable to provide varying degrees of tightness between the door and the stationary box and the self-aligning feature of the striker plate provides optimum closure each time.

It will, of course, be understood that various changes may be made in the form, details, arrangement and proportions of the various parts without departing from the scope of my invention.

What I claim is:

1. A magnetic latch adapted to be attached to the exterior of a refrigerator, the refrigerator having a stationary box and a door attached thereto swingably mounted for positioning between an open and closed position, said magnetic latch comprising

a striker plate assembly, said striker plate assembly comprising

a door mounting bracket adapted to be affixed to the swingable door of the refrigerator, said door mounting bracket having outwardly projecting striker plate receiving flanges attached thereto,

a striker plate, said striker plate having flanges projecting outwardly therefrom affixed to the flanges of said door mounting bracket whereby said striker plate is positioned substantially parallel with the edge of the swingable door of the refrigerator, and

a magnet unit, said magnet unit comprising

a magnet unit mounting plate adapted to be affixed to the stationary box of the refrigerator, said magnet unit mounting plate having a magnet receiving plate attached thereto and spaced apart therefrom by an offset plate portion whereby the magnet receiving plate is spaced apart from the stationary door of the refrigerator a predetermined distance and

a magnet having poles thereon affixed to the magnet receiving plate, the poles positioned whereby the poles cooperate with said striker plate in the closed position of the swingable door relative to the stationary box of the refrigerator, thereby maintaining the swingable door of the refrigerator in closed position and whereby the magnetic forces of said magnet are directed toward said striker plate and away from the refrigerator in the open position of the door relative to the stationary box of the refrigerator.

2. The magnetic latch of claim 1 wherein said striker plate is pivotally attached to said door mouting bracket whereby said striker plate rotates about an axis substantially parallel with the edge of the door of the refrigerator thereby aligning said striker plate relative to the poles of said magnet in the closed position of the swingable door relative to the stationary box of the refrigerator.

3. The magnetic latch of claim 1 wherein said magnet unit mounting plate includes a plurality of elongate openings having a longitudinal dimension substantially normal of the edge of the swingable door of the refrigerator thereby providing movement of said magnet unit mounting plate forwardly toward the door and rearwardly away from the door whereby the magnetic force of said magnet mounted on said magnet unit mounting plate relative to said striker plate may be adjusted.

4. The magnetic latch of claim 1 including a striker plate assembly housing detachably mounted on said striker plate assembly and

a magnet unit housing affixed on said magnet unit.

5. The magnetic latch of claim 4 wherein said magnet

unit housing includes shoulders affixed thereon and positioned between the stationary box of the refrigerator and the magnet receiving plate of said magnet unit mounting plate whereby the magnetic force of said magnet are directed toward said striker plate and away from the refrigerator in the open position of the door relative to the stationary box of the refrigerator.

6. The magnetic latch of claim 5 wherein said magnet unit housing converges whereby the shoulders thereof are snugly positioned between the stationary box of the refrigerator and the magnet receiving plate of said magnet unit mounting plate.

References Cited

UNITED STATES PATENTS

3,261,631	7/1966	Alessi	292—251.5
3,287,051	11/1966	Anderson	292—251.5

BERNARD A. GILHEANY, *Primary Examiner.*

G. HARRIS, *Assistant Examiner.*