April 25, 1950 J. L. A. BOREL 2,505,275

ENCLOSING AND SUPPORTING CASE FOR PORTABLE TYPEWRITERS

Original Filed July 25, 1945 5 Sheets-Sheet 1

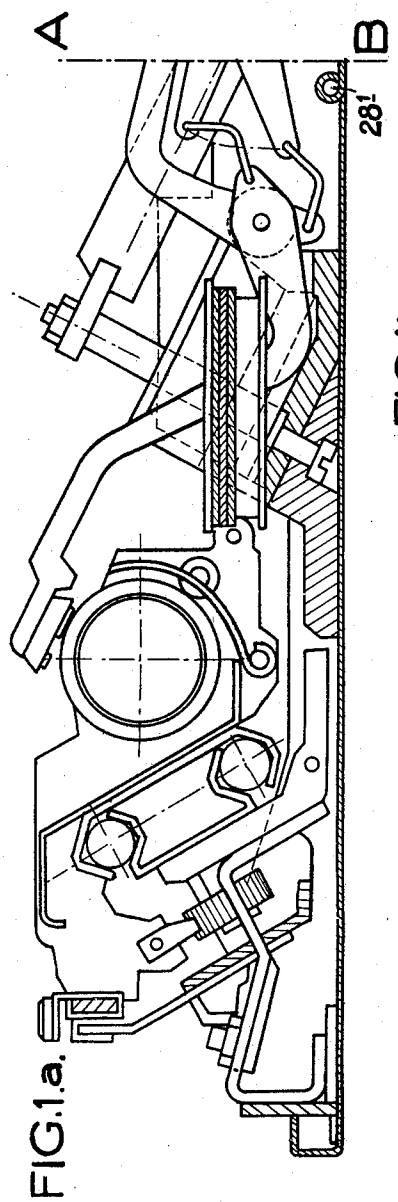


FIG.1a.

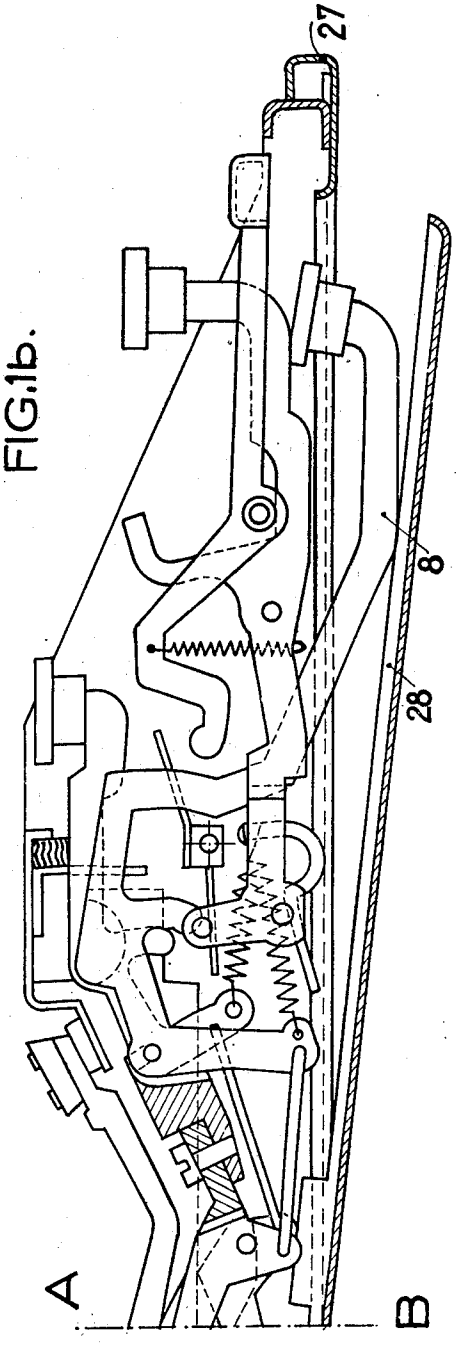


FIG.1b.

INVENTOR
J. L. A. BOREL
BY Glascock Downing & Seebold

April 25, 1950 J. L. A. BOREL 2,505,275

ENCLOSING AND SUPPORTING CASE FOR PORTABLE TYPEWRITERS

Original Filed July 25, 1945 5 Sheets-Sheet 2

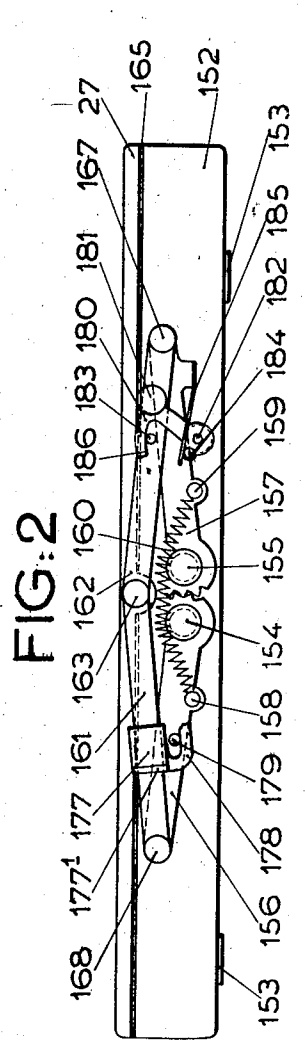


FIG:2

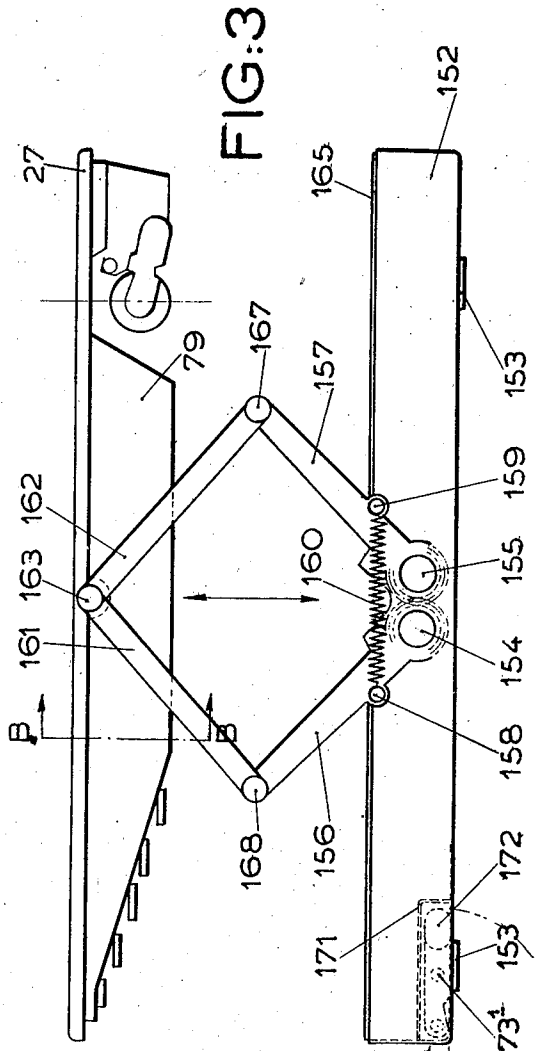


FIG:3

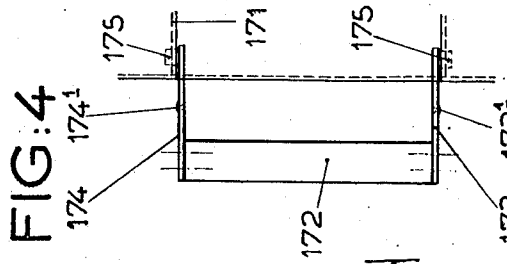


FIG:4

Inventor

J. L. A. Borel

By Glascock Downing Seibold

Attys.

April 25, 1950 J. L. A. BOREL 2,505,275

ENCLOSING AND SUPPORTING CASE FOR PORTABLE TYPEWRITERS

Original Filed July 25, 1945 5 Sheets-Sheet 3

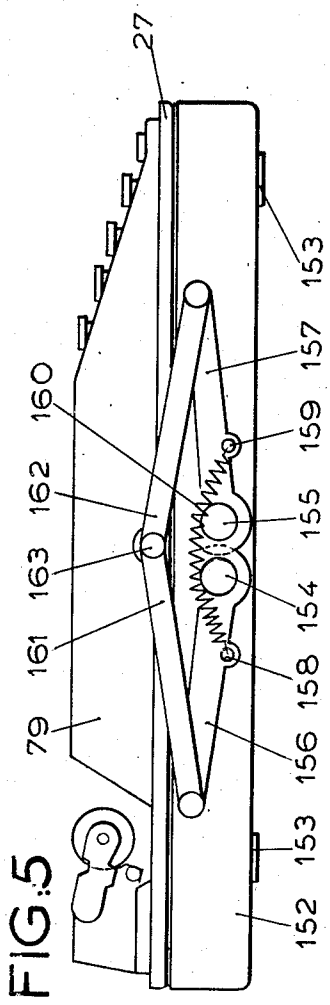


FIG.5

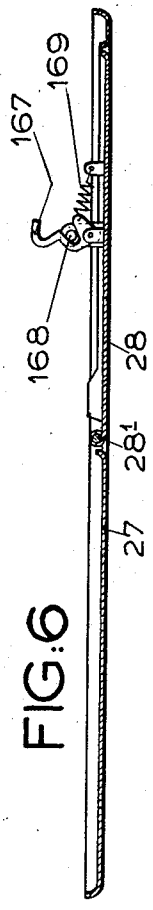


FIG.6

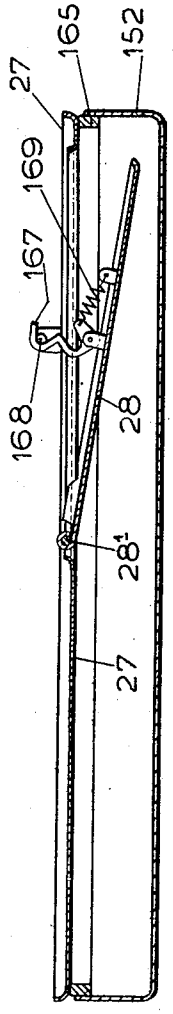


FIG.7

Inventor
J. L. A. Borel
By Glascock Downing Seibold
Attys

April 25, 1950 J. L. A. BOREL 2,505,275

ENCLOSING AND SUPPORTING CASE FOR PORTABLE TYPEWRITERS

Original Filed July 25, 1945 5 Sheets-Sheet 4

FIG. 8

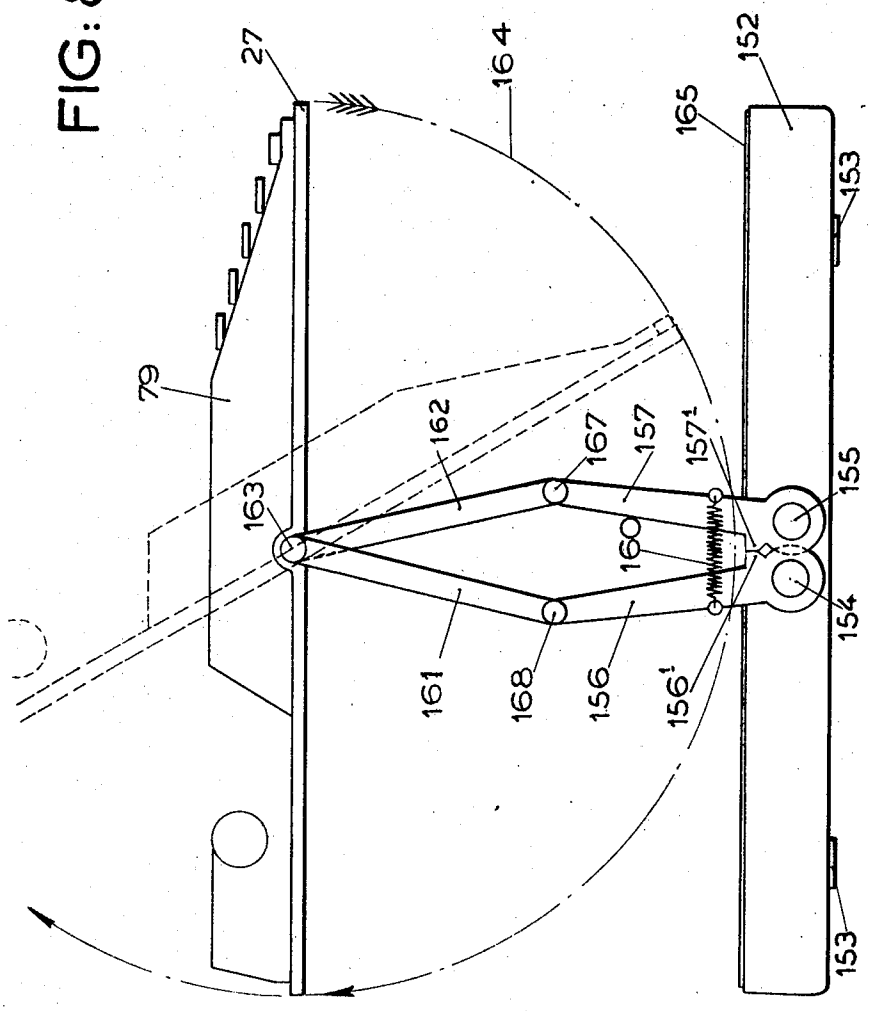


Inventor
J. L. A. Borel
By Glascock Downing & Seebold
Attys.

April 25, 1950 J. L. A. BOREL 2,505,275

ENCLOSING AND SUPPORTING CASE FOR PORTABLE TYPEWRITERS

Original Filed July 25, 1945 5 Sheets-Sheet 5

FIG. 9

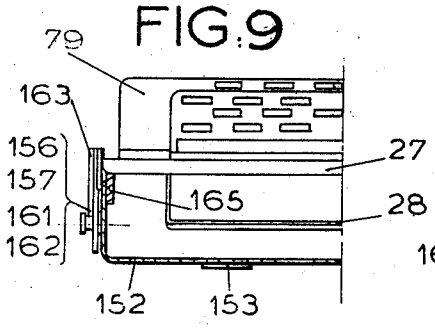


FIG. 11

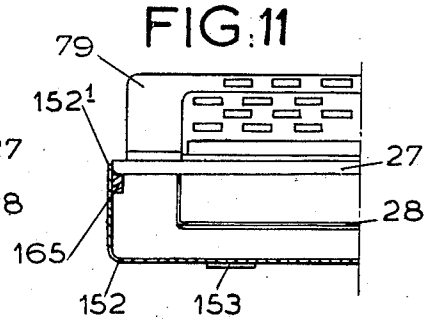


FIG. 10

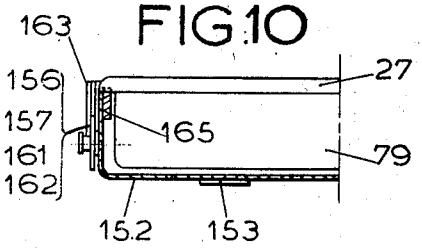


FIG. 12

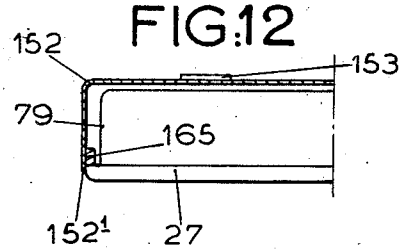


FIG. 13

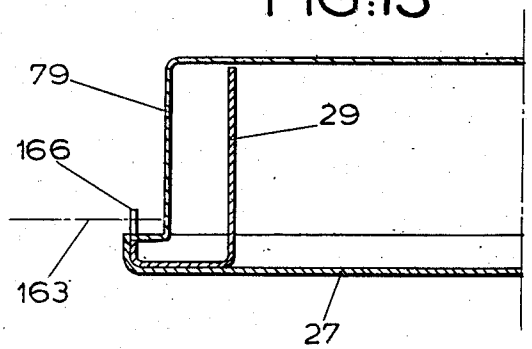


Inventor
J. L. A. Borel
By Glascock Downing & Seibold
Attys.

Patented Apr. 25, 1950 2,505,275

# UNITED STATES PATENT OFFICE

2,505,275

## ENCLOSING AND SUPPORTING CASE FOR PORTABLE TYPEWRITERS

Joseph Louis Adhémar Borel, Paris, France, assignor to Societe "Rooy," a French joint-stock company

Original application July 25, 1945, Serial No. 606,906. Divided and this application September 10, 1946, Serial No. 695,971. In France June 10, 1944

4 Claims. (Cl. 197—186)

1

The present application is a division from Ser. No. 606,906, filed on July 25, 1945.

The box-like cover in which a so-called portable typewriter is enclosed is separate from the same in use, and one can imagine easily how troublesome such an arrangement may be to anyone who has to work in the train or at the hotel or on a desk.

It should also be considered that in the future the typewriter of the portable type will not merely be a machine especially designed for travellers but also, by virtue of its compactness and low cost, it will constitute a popular instrument that, provided it is at least designed rationally, will find its place at home just the same as any other modern machine that contributes to comfortableness and agreeableness.

Here again, only a low typewriter that cannot be operated if not coupled with its cover will be suitable, since it can be arranged most easily in a piece of furniture, e. g. in the drawer of a table, and its cover will not constitute a cumbrous object that is of no use during the work or that cannot be located after the machine has been in use for a long time.

The following description, in which reference is had to the appended drawing, will give a nonlimitary example of how this invention can be carried into effect.

Figure 1 is a general side view of the typewriter with its left side-plate removed, various parts being sectioned on the median vertical plane.

Figure 2 is a side view of the typewriter enclosed in its case.

Figure 3 is also a side elevational view showing the typewriter as it is taken out of its case or placed back into it.

Figure 4 is a plan view of the typewriter carrying handle.

Figure 5 is a side view of the typewriter in its working position.

Figure 6 shows details of the base-plate lid in its closed position.

Figure 7 is a vertical sectional view of the baseplate and the lid thereof in the open position of the latter.

Figure 8 is a side elevational view of the completely open typewriter as carried by a pair of side parallelograms.

Figures 9 and 10 are fragmentary front elevational views of the typewriter in its working and closed positions respectively, the case being shown in sectional view; in this embodiment the enclosing is obtained with the aid of parallelograms.

Figures 11 and 12 are views similar to Figs. 9 and 10 and relate to a modification in which the closing is obtained simply by hand operation.

2

Figure 13 is a sectional view taken on line B—B in Fig. 3 and shows the connection of the baseplate with a side-plate and the case.

Fig. 1 shows that while in a highly depressed typewriter the space is still available vertically to accommodate the printing keyboard in its inoperative position, it would be impossible to depress the longer key levers completely without their being stopped by the typewriter baseplate.

On the other hand, it has been mentioned precedingly that a typewriter which could not be operated unless it has its cover attached thereto would afford considerable conveniences in its use. Up to the present it has been found sufficient to secure the typewriter on the bottom of a case, which bottom most frequently provides the baseplate that carries the typewriter, and to cap the latter with a simple enclosing cover which becomes wholly useless and highly cumbrous in worktime.

According to this invention, the machine is mounted immovably on a part **27** of the case which provides the bottom or baseplate thereof. Said bottom **27** carries a movable lid **28** (Figs. 1, 5, 6, 7, 9) which is shut when the typewriter is not in use and which opens automatically when any one of the keys is depressed.

It will be seen in Fig. 1 that when lid **28** is open printing can be performed normally, the bars **8** being able to operate unhindered.

The typewriter secured on its base-plate **27** is enclosed in a cover or case **79** which protects the same from shocks and dust. Said case has less breadth than the base plate, so that a bearing margin is left between the same and the edge of the base-plate all around the typewriter which is useful for seating the latter in both its enclosed and its operative positions. Fig. 13 shows the cover or case **79**, the base-plate **27**, and the left side-plate **29** on which the eye **166** serves for the pivoting of the links **161**, **162** of the parallelogram **156**, **157**, **161**, **162** by means of pin **163** (Figs. 2, 5, 8). If the typewriter were enclosed in its base-plate and case it could not be operated as described hereinbefore unless the lid **28** were open (Fig. 7), since the key levers **8** tend to project below the base-plate. Consequently, for enabling said lid **28** to open, space must be provided for the same further below; such space can be secured with the aid of retractable legs or of any other suitable props.

However, since portable typewriters must be

provided with a cover, it is congruous to use the latter both for enclosing the typewriter after its use and for transporting it as well as for supporting it when in use, whereby a twofold advantage is secured, in that on one hand the space necessary for the opening of the lid is provided and on the other hand it is not possible to operate the typewriter unless its cover is attached thereto.

This leads to making the lid unremovable from the typewriter.

The closing and opening of the case can be performed in two ways, viz.: 1st, by means of a pair of deformable parallelograms, 2nd, by simply overturning the typewriter by hand upon or into its case.

Both of these arrangements will be described.

1st (Figs. 2, 3, 5, 8). The typewriter being assembled with its base-plate 27 and casing 79, its position is secured during the time it is taken into or out of the case 152 by the pair of parallelograms fulcrumed at 154 and 155 on said case and each of which comprises a pair of arms 156, 157 coupled with each other by teeth compelling them to move by equal amounts in reverse directions and a pair of links 161, 162 pivoted at one end on said arms 157, 163 and at the other end at 163 on the base-plate 27.

Anchored at 158 and 159 to arms 156 and 157 are the ends of a spring 160 that tends to pull the parallelogram together. The typewriter can pivot about 163 (Fig. 8) on the arc 164.

In order to preclude the opening of the case as the typewriter is being carried about each parallelogram is provided (Fig. 2) with a safety latch composed, e. g. as the left one, of a slide 177 guided on the arm 161 and formed with a ramp 178. As the slide 177 is pushed by means of its turned up edge $177^1$ or of a handle that can be substituted for the same, said slide will move to the right until the ramp 178 thereon, by engaging a pin 179 carried by the arm 156, latches the whole device and retains the parallelogram from opening. The latch shown at the right in the same figure comprises a member 180 pivoted at 189 on arm 157 and fitted with a pin 184 and a handle 181. The pin 184 is pressed by a spring 185 secured on the arm 157. As the member 180 is pushed to the left by means of the handle 181 it will assume the position shown, and the ramp 186 thereon will climb on a pin 183 secured on the arm 162, thus locking the parallelogram. The spring 185 which acts upon 184 secures the member 180 in its engaged and its disengaged positions.

As shown in Fig. 2 the typewriter is enclosed in its case. The arms of the parallelogram have opened and the spring 160, tensioned over the pivots 154 and 155, tends to close the parallelogram again, whereby the case is compelled to remain on the piece of furniture for the time the typewriter is being opened.

By taking hold of the typewriter at either end of its base-plate 27 and pulling it up same will be raised clear of its case 152 (Fig. 3) and this movement, assisted by the tension of spring 160, will proceed until the stops $156^1$ and $157^1$, by coming into engagement with each other, put an end to it (Fig. 8). At that moment, while the two side parallelograms are sustaining the typewriter in its raised position, same will be overturned about 163 as shown by the arrow 164, whereafter, by a slight pressure exerted thereupon, it will be sunk home into its operating position (Fig. 5).



Upon the work being finished, it is only necessary to proceed once again as described, whereafter, by upsetting the typewriter, the system will be again such as it is shown in Fig. 2.

The advantages and conveniences in use brought about by such a combination will be appreciated easily.

Figs. 7, 9, 10, 11 and 12 show how the typewriter as a whole is supported on the base-plate. A plastic strip 165 is secured inside the case at the edge thereof and provides the seat the typewriter is to rest on whether enclosed or displayed. Of course, said strip could be replaced by a strip of another suitable material.

2nd (Figs. 11 and 12). The process of taking the typewriter into and out of its case may simply consist in taking hold of the case or the typewriter and bringing them into relation with each other as shown in Fig. 11 where the typewriter is open and in use or in Fig. 12 where the typewriter is enclosed in its case.

In this type of enclosing the upper edge $152^1$ stands higher than the strip of plastic material 165, so that a retaining flange is left for the typewriter, which prevents the latter from sliding sideways on its cover in the course of its operation.

The lid 28 shown in detail is Figs. 1, 6 and 7 is as broad as necessary for the passage of all the levers in the keyboard. It is hinged at $28^1$ to the base plate 27. Its travel is limited by a member 167 pivoted on lid 28. Said member 167 is formed with two bevel notches. A pin 168 on the base-plate 27 is received in the upper notch in member 167 when the lid is open and in the lower notch when the lid is closed. A spring 169 anchored to the lug on member 167 urges the latter into permanent engagement with pin 168. When the lid is closed it remains in the position in which it is secured by the ramp on the lower notch; in order to open said lid it is only necessary to press same downwards, whereby the ramp on the lower notch is caused to drive member 167 aside to the left, whereafter the same will snap back to the right while the pin 168 slips on the ramp in the upper notch in whose bottom it comes to rest, thus keeping the lid open; the upper notch ends in a hook adapted to limit the travel in opening.

153 designates buttons made of plastic material and intended to fix the typewriter on the desk during its operation by their adhesion.

Figs. 3 and 4 show a handle for carrying the typewriter. Said handle, located at the front, is received in a recess 171 provided in the base plate in the space left free by the keyboard in the enclosed position of the typewriter.

Said handle 172 is mounted on a pair of strips 173, 174 journaled on 175 and each of which is formed or provided with a boss $173^1$, $174^1$ respectively. When the typewriter is to be carried the handle is pulled out of its recess 171, whereafter it is swung on the arc 176 (Fig. 3). In order to restore the handle same is pushed back into the position shown in chain lines, where it remains retained by the pressure of the pair of bosses $173^1$, $174^1$ against the side walls of recess 171.

The above-described arrangements are mentioned by way of example only, since the shapes, dimensions and details of design and application can be modified without thereby departing from the characteristics of the invention.

What I claim as my invention and desire to secure by Letters Patent is:

1. In combination, a typewriter casing includ-

ing a body and a cover cooperating therewith for enclosing a typewriter machine in its inoperative travelling position and adapted to rest over the edges of the casing body in both its normal inoperative travelling and upside down operative positions, a typewriter machine secured to the cover and arranged inside or outside the closed casing according to the position of the cover and double two-link systems located on each side of the casing for assembling the body with the cover, the outer ends of each two-link system being pivotally secured to the casing body and to the cover respectively and the length of the links being sufficient to allow the cover to be moved far enough away from the casing body to allow the pivoting movement of the cover between its two opposite positions corresponding to machine operativeness and inoperativeness.

2. In combination, a typewriter casing including a body and a cover cooperating therewith for enclosing a typewriter machine in its inoperative travelling position and adapted to rest over the edges of the casing body in both its normal inoperative travelling and upside down operative positions, a typewriter machine secured to the cover and arranged inside or outside the closed casing according to the position of the cover, double two-link systems located on each side of the casing for assembling the body with the cover, the outer ends of each two-link system being pivotally secured to the casing body and to the cover respectively, the pivotal connections between the casing body and the associated links of each double two-link system being located at adjacent points of the casing body, a gearing between the cooperating link ends secured to adjacent points of the casing body at each side thereof for constraining the links to remain symmetrical with reference to a transverse vertical plane when the two link systems are caused to pivot, and the length of the links being sufficient to allow the cover to be moved far enough away from the casing body to allow the pivoting movement of the cover between its two opposite positions corresponding to machine operativeness and inoperativeness.

3. In combination, a typewriter casing including a body and a cover cooperating therewith for enclosing a typewriter machine in its inoperative travelling position and adapted to rest over the edges of the casing body in both its normal inoperative travelling and upside down operative positions, a typewriter machine secured to the cover and arranged inside or outside the closed casing according to the position of the cover, double two-link elements located on each side of the casing for assembling the body with the cover, the outer ends of each two-link system being pivotally secured to the casing body and to the cover respectively, the length of the links being sufficient to allow the cover to be moved far enough away from the casing body to allow the pivoting movement of the cover between its two opposite positions corresponding to machine operativeness and inoperativeness, and means for locking at least one two-link system in the collapsed position thereof in which the cover lies over the casing body in its normal travelling and operative positions, said means including a stud on one link and a hook shaped member adapted to cooperate therewith and carried by the cooperating link of the two-link system considered.



4. In combination, a typewriter casing including a body and a cover cooperating therewith for enclosing a typewriter machine in its inoperative travelling position and adapted to rest over the edges of the casing body in both its normal inoperative travelling and upside down operative positions and including a pivoting shutter portion adapted to be angularly shifted into a position inside the casing body when the cover and machine are in their operative position, a typewriter machine secured to the cover and arranged inside or outside the closed casing according to the position of the cover, double two-link systems located on each side of the casing for assembling the body with the cover, the outer ends of each two-link system being pivotally secured to the casing body and to the cover respectively, the pivotal connections between the casing body and the associated links of each double two-link system being located at adjacent points of the casing body, a gearing between the cooperating link ends secured to adjacent points of the casing body at each side thereof for constraining the links to remain symmetrical with reference to a transverse vertical plane when the two link systems are caused to pivot, and the length of the links being sufficient to allow the cover to be moved far enough away from the casing body to allow the pivoting movement of the cover between its two opposite positions corresponding to machine operativeness and inoperativeness, and means for locking the shutter portion of the cover in either of its operative and travelling positions and including a substantially ε shaped double recessed latch pivotally secured to said shutter portion, a cooperating projection on the remaining portion of the cover and adapted to engage selectively either of the recesses in the latch according to the position to be assumed by the shutter portion and a spring urging the latch on the shutter portion against the projection.

JOSEPH LOUIS ADHÉMAR BOREL.


REFERENCES CITED

The following references are of record in the file of this patent:

UNITED STATES PATENTS

| Number | Name | Date |
|---|---|---|
| 1,469,477 | Holden | Oct. 2, 1923 |
| 1,497,482 | Burg | June 10, 1924 |
| 2,140,092 | Prezioso | Dec. 13, 1938 |

FOREIGN PATENTS

| Number | Country | Date |
|---|---|---|
| 170,107 | Great Britain | of 1921 |