United States Patent

Gerson

[15] **3,639,056**

[45] **Feb. 1, 1972**

[54] PROGRAMMED PLATE-MAKING MACHINE

[72] Inventor: **Albert Gerson,** Baldwin Road, Yorktown Heights, N.Y. 10598

[22] Filed: **June 17, 1970**

[21] Appl. No.: **47,051**

[52] **U.S. Cl.** **355/40,** 355/53, 355/70, 355/75, 355/84, 355/95

[51] **Int. Cl.** **G03b 27/62**

[58] **Field of Search** 355/40, 51, 53, 70, 75, 84, 355/95, 3, 8

[56] **References Cited**

UNITED STATES PATENTS

3,380,339	4/1968	Moss	355/51
2,153,186	4/1939	Henderson	355/70
2,919,635	1/1960	Levine et al.	355/84

Primary Examiner—Samuel S. Matthews
Assistant Examiner—Richard A. Wintercorn
Attorney—Charles E. Temko

[57] **ABSTRACT**

A photo-offset plate-making machine particularly adapted for the exposure of a series of prints by successively locating a negative carrier in predetermined horizontal and vertical positions relative to a plate-supporting frame for repeated exposure. Illuminated adjustable signal means is provided to indicate the arrival of the negative carrier to said predetermined locations, the signal means being powered by extendable power cords having means for retracting the same depending upon the location of the negative carrier.

6 Claims, 8 Drawing Figures

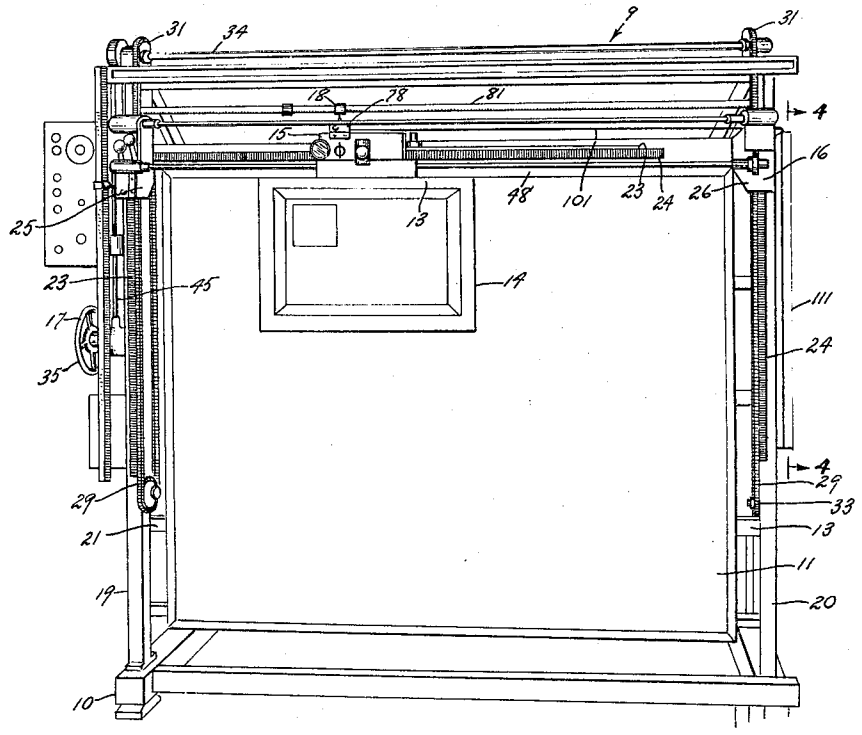

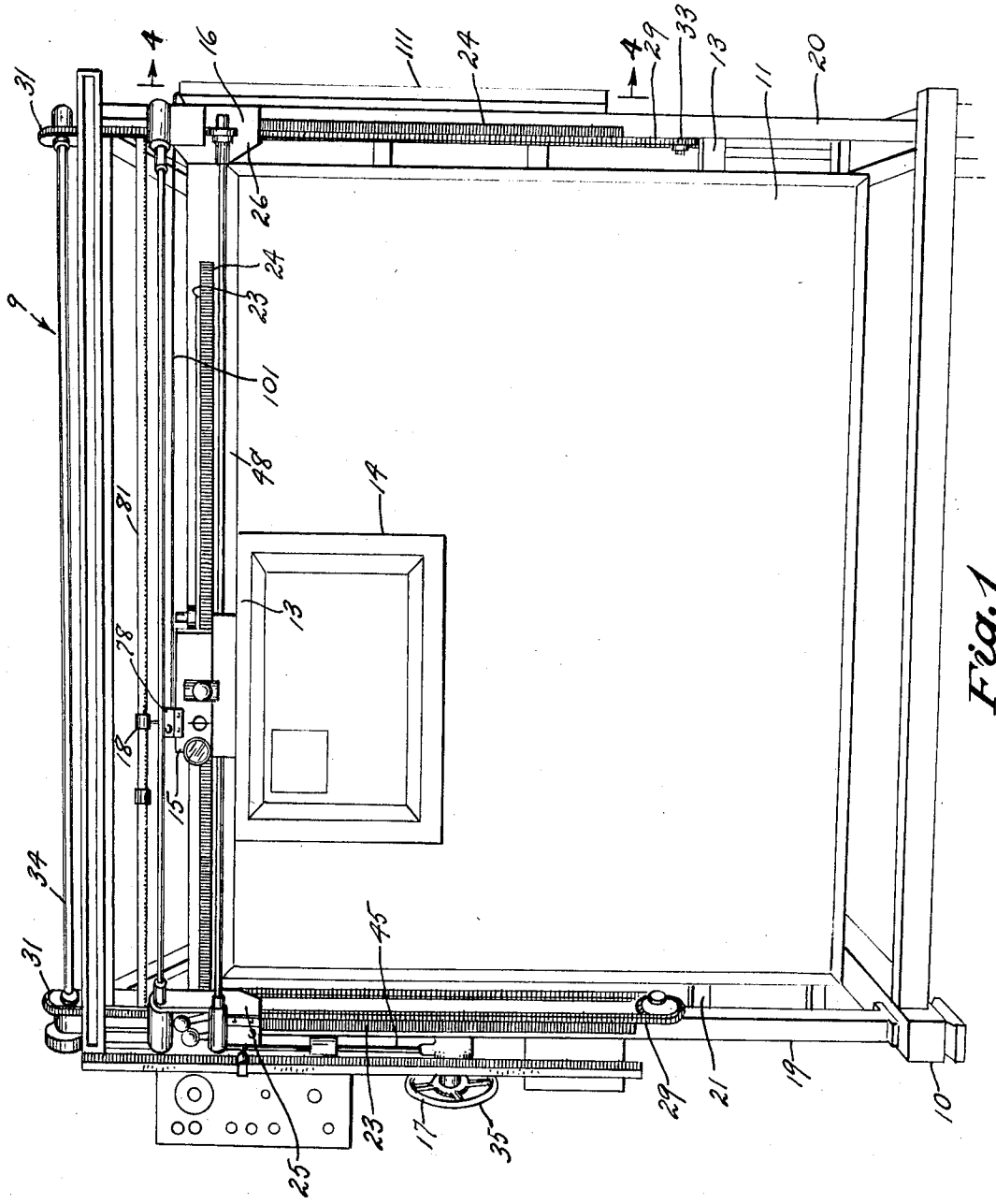
4
16
111
24
4
29
33
13
11
20
31
26
24
23
9
101
48
14
81
13
18
18
15
34
31
45
23
17
35
25
29
21
19
10

Fig. 1

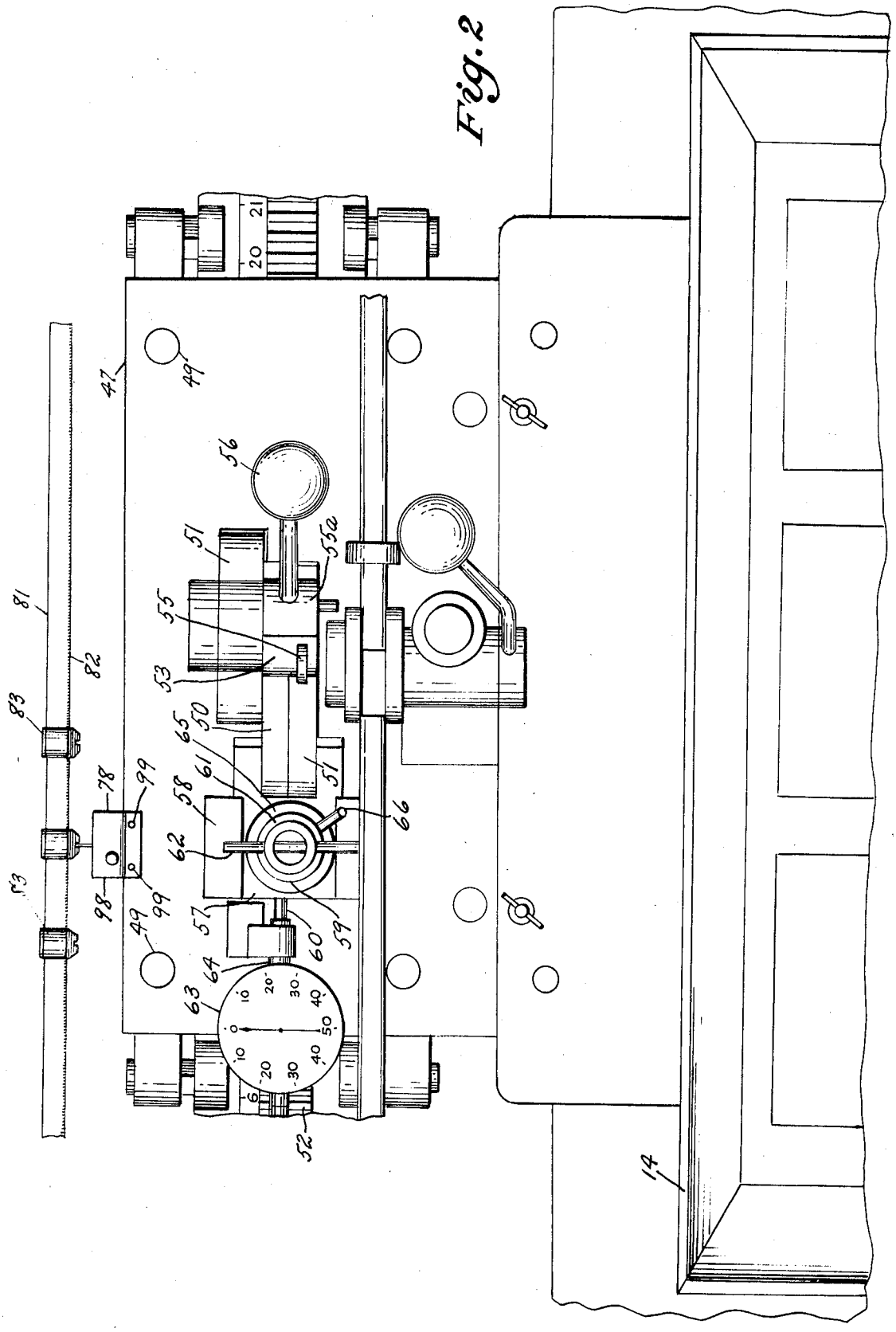
47
49
56
51
55a
55
53
50
65
61
58
62
66
57
60
59
64
63
52
81
82
83
78
99
98
14
20
21
6
10
20
30
40
50

Fig. 2

Fig. 3

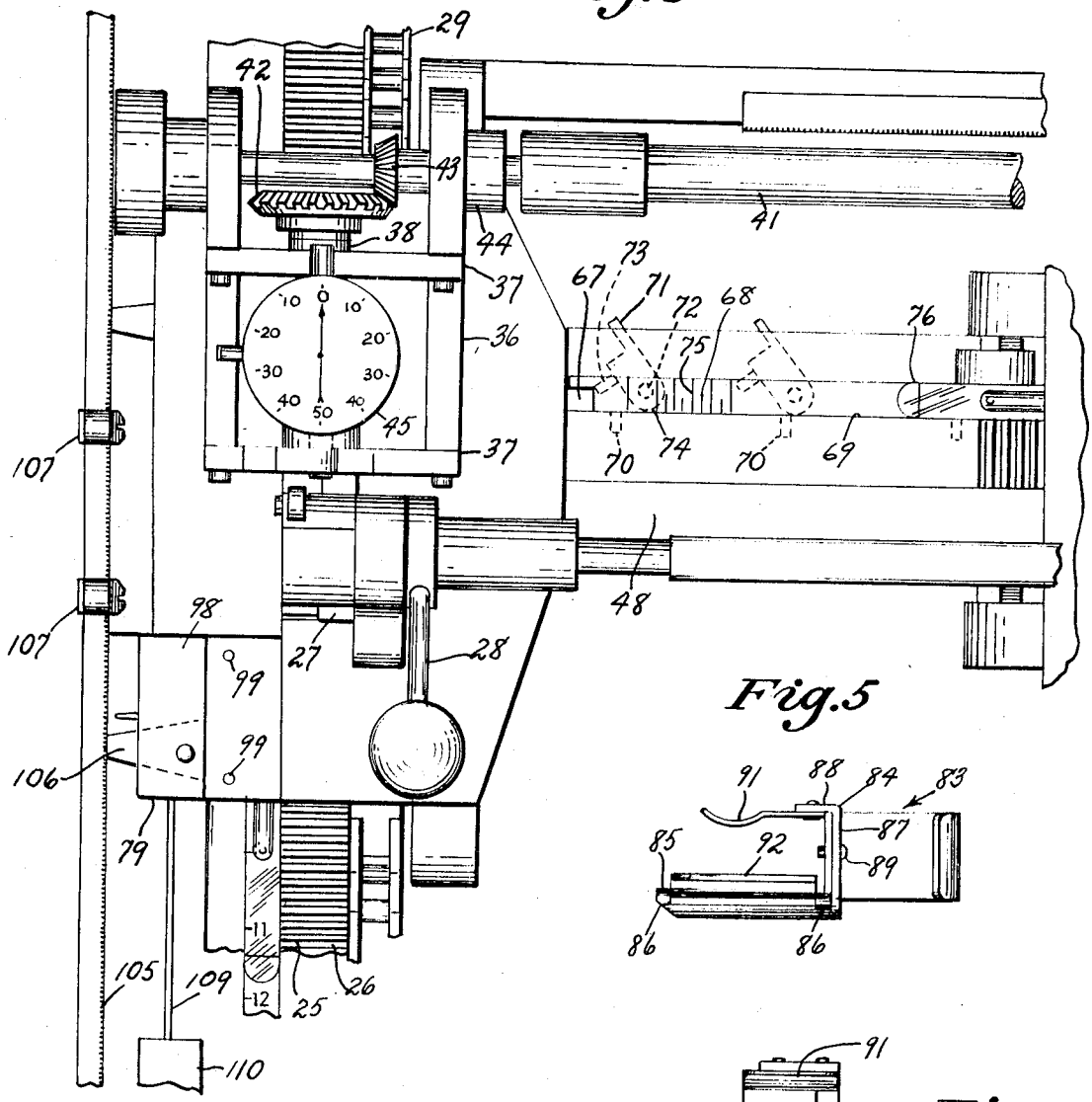

Fig. 5

Fig. 6

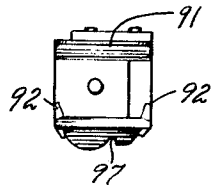

Fig. 4

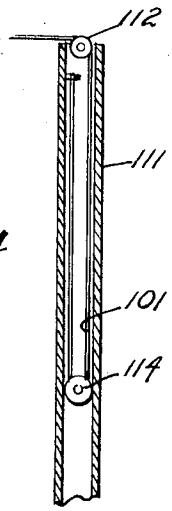

Fig 8

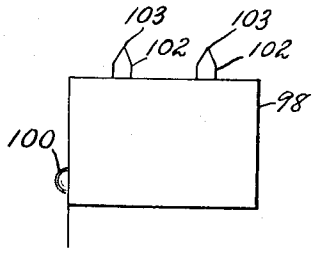

Fig. 7

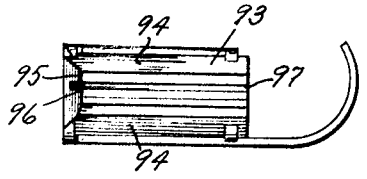

PROGRAMMED PLATE-MAKING MACHINE

This invention relates generally to the plate-making art used in photo-offset lithography printing, and more particularly to a machine adapted for multiplate printing and color work. Reference is made to my prior U.S. Pat. Nos. 3,150,582 granted Sept. 24, 1964; and 3,484,166, granted Dec. 16, 1969; the present invention relating to improvements in structure disclosed therein.

In the photolithographic process, it is frequently desireable to have multiple images in spaced and predetermined positions on the photographic plate, which images are obtained by repeated exposure. Certain economies result from the production of a number of identical reproductions from a single plate impression, and in color work, the number of impressions is equal to the number of colors required. In order to reproduce work of highly acceptable quality, it is necessary that the various color impressions be exactly superimposed. To this end, it is necessary that the negatives used to expose the photolithographic plate be in precise register and proper contact. While devices of this general character are known, because of the extremely accurate machine work required in the fabrication thereof, and the large bulk and weight involved, such devices are relatively costly, and the use thereof is consequently restricted. In addition, the systems employed in prior art machines are complicated and require considerable training before the operator is capable of reproducing satisfactory work.

In my prior above-mentioned U.S. Pat. No. 3,150,582, there is disclosed a device, including a generally vertically oriented frame which supports a negative carrier in such manner that it may be moved in a parallel vertical plane over the face of a support for the lithographic film or plate, and be locked in proper location in any one of a plurality of positions whereby successive exposures may be made. By virtue of cooperating racks arranged along vertical and horizontal axes, it is possible to obtain fine adjustment of the order of one-half of a single rack tooth in either of the two above-mentioned directions before the negative carrier is locked in position just prior to exposure. In my U.S. Pat. No. 3,484,166, there is disclosed a means for obtaining even finer adjustment of the order of several thousands of an inch, which the toothed rack engagement cannot always provide.

While the above-mentioned means are extremely useful, nevertheless, where a plurality of lithographic films or plates are exposed from a single negative, it is still necessary to precisely align the negative carrier using said means each time the negative carrier is moved to a new location. The locating of the negative carrier must be determined by reference to a scale, first with respect to horizontal position, and secondly with respect to vertical position. This has been time-consuming.

It is, therefore, among the principal objects of the present invention to provide an improved indicating means which will visually call attention to the operator of the arrival of the negative carrier, with each successive positioning at the correct location, both horizontally and vertically, without the necessity of resorting to examination of the above-mentioned scale.

Another objection of the invention lies in the provision of illuminated means operative upon arrival at predetermined location of the negative carrier with respect to a plate-support, whereby a series of lithographic films or plates may be exposed from a single negative in rapid succession, and with a minimum of effort on the part of the operator.

Yet another object of the invention lies in the provision of illuminated signal means of the class described, which may be readily incorporated into existing plate-making machines with a minimum of adaptation, irrespective of the means already present in such devices for achieving precise registry.

A further object of the invention lies in the improved signalling means of the class described which may be carried by the negative carrier to be progressively actuated by any of a series of contact closing devices, previously positioned at the start of a given job to constitute a program for exposure, the programming means being such that it need not be disturbed should it be necessary to use the plate-making machine for single isolated exposures not requiring the program.

These objects, as well as other incidental ends and advantages, will more fully appear in the progress of the following disclosure, and be pointed out in the appended claims.

In the drawings, to which reference will be made in the specification, similar reference characters have been employed to designate corresponding parts throughout the several views.

FIG. 1 is a front perspective view of an embodiment of the invention.

FIG. 2 is a fragmentary enlarged front elevational view of a chase or negative support incorporating a horizontal axis adjustment means.

FIG. 3 is a fragmentary view in elevation showing a corresponding vertical axis adjustment means.

FIG. 4 is a view in elevation showing self-operative means for storing a power cord used in conjunction with signalling means forming a part of the disclosed embodiment.

FIG. 5 is a side elevational view of an individual circuit closing means forming a part of the embodiment.

FIG. 6 is an end elevational view thereof, as seen from the left-hand portion of FIG. 5.

FIG. 7 is a bottom plan view thereof.

FIG. 8 is a view in elevation of a light element carried by the chase or negative carrier, in such manner as to be selectively engaged by one of a plurality of circuit-closing means shown in FIGS. 5 to 7, inclusive.

In accordance with the invention, the device generally indicated by reference character 9, comprises broadly: a base 10, a lithographic plate support element 11, lithographic plate registering means 12, mounting means 13 for positioning the support element 11, a negative carrier support 14, horizontal registering means 15, vertical registering means 16, means 17 to vertically move the horizontal registering means, and programming means 18. Supported from the base 10 is a negative carrier illumination means (not shown) similar to that disclosed in my prior U.S. Pat. No. 3,484,166, and eliminated from the drawing for purposes of clarity.

The base 10 is possessed of sufficient weight and rigidity to form a stable foundation for the device. Projecting perpendicularly upward from the base are a pair of uprights 19 and 20. Secured between the uprights 19 and 20 are a plurality of struts 21 forming the mounting means 13.

The vertical registering means 16 includes a pair of racks 23 and 24 which are substantially identical, and in horizontal alignment. Slideably disposed on said racks, are a pair of housings 25 and 26. Overlying the racks 23 and 24 are short rack sections 27 which are completely complementary to the racks, so that with relatively light pressure, the rack sections will properly seat or mesh with the racks to immobilize the housings with respect thereto. The rack sections 27 are moved toward and away from the racks 23 and 24 in a manner disclosed in my prior above-mentioned patent using an operating lever 28.

The housings 25 and 26 are connected to one point on angular chains 29, which ride on upper sprockets 30 and 31, and lower sprockets 32 and 33. A counterweight (not shown) is mounted on each of the chains 29 to substantially offset the weight of the means 16. The upper sprockets 30 and 31 are fixed on a transverse upper shaft 34 journaled on the ends of the uprights 19 and 20, respectively. One end of the shaft 45 is connected by a pair of bevel gears (not shown) to be operated by a handwheel 35. Thus, when the lever 28 is in its neutral position, wherein both rack sections 27 are disengaged, rotation of the handwheel moves the shaft 45 and the housings 25 and 26 up or down to a desired approximate position (as for example to a position within one-eighth inch of the ultimately desired position). Moving the lever 28 up or down will then force one or the other of the rack sections into the racks, and when the parts are fully interengaged, they will be disposed precisely at a predetermined position.

To obtain still closer adjustment, in the order of the nearest one-thousandth of an inch, in the housings **25** and **26** include auxiliary frame elements **36** arranged for rectilinear movement with respect thereto. The frame elements support a pair of trunnions **37** and turn mounting a stub shaft **38**. The shaft mounts a small handwheel or knob **39** at one end, and a threaded collar **40** at an opposite end which engages a transverse shaft **41** to transmit motion to a corresponding shaft (not shown) on the oppositely disposed housing. The stub shaft **38** mounts a bevel gear **42** which transmits motion to a bevel gear **43** on a vertically arranged internally threaded bushing **44**. This arrangement drives a micrometer gauge **45**, the operation of which is more fully set forth in my above-mentioned U.S. Pat. No. 3,484,166.

The horizontal registering means **16** includes a rectangularly shaped member **47** (FIG. 2) supported upon a transverse beam **48** by rollers **49**. Rack sections **50** and **51** selectively coact with a rack **52**, and are supported for pivotal movement by pin **53** which provides a pivotal axis in a member **54** which remains fixed with respect to the rack **52** when either rack section is engaged therewith. A pair of corresponding cam rollers, one of which is indicated by reference character **55**, are both mounted on a pivotally mounted cam member **55***a* operated by a shift lever **56**. A horizontally adjustable plate **57** is supported in position between upper and lower guides **58** and **59**, respectively, the plate being formed integrally with the member **54**, and mounting an eccentric **60** on a shaft **61**. The cam includes a manually engageable member **62** for rotation thereof, the eccentric cam surface bearing against the surface of a circular bore in a follower plate integral with the member **47**. Thus, with rotation of the cam **60**, minute adjustment of the member **47** along the transverse beam **48** is possible. A micrometer gauge **63** is connected to an operating pintle **64**, and is fixed with respect to the member **54**, so as to indicate movement of the member **47**. A lock nut **65** bears upon the shaft **61**, and prevents rotation in those applications where minute horizontal adjustment is not required. The nut **65** is provided with a manually engageable member **66** extending therethrough to facilitate loosening and tightening thereof. The negative carrier support **14** is secured to the lower portion of the member **47**, and thus moves horizontally therewith. From a consideration of FIG. **2**, it will be apparent that a simple mode of operations includes the locating of the member **47** by first locking the same using the shift lever **56** and the subsequent rotation of the cam **60** while reading horizontal displacement on the gauge **63** to the precision desired.

Referring again to FIG. **3** in the drawings, the transverse beam **48** is provided with a horizontally arranged groove or track **67**, in which there is slightably disposed an elongated scale member **68**. Preferably, the track **67** is of rectangular cross section including a lower wall **69** provided with a plurality of small vertically or laterally arranged bores **70**, spaced from each other in equal increments, as for example, 1-inch intervals. The leftward end of the scale member **68** is provided with a pivotal locking member **71** mounted on a pintle **72**, and having a projection **73** selectively engageable in one of the bores **70**. Rightwardly of the pintle **72** is an index (a point of zero measurement) **74**, and subsequent graduations **75**. Extending leftwardly from the member **47** is a corresponding index member **76** alignable with the graduations **75**.

While the scale member **68** will normally be positioned with the pintle **72** engaged in the leftwardmost bore **70**, in certain types of copy, it may be desirable to arrange the leftward margin inwardly from the normal leftward edge of the plate support element **11**. When such is the case, the locking member is manually pivoted out of an engagement with the leftwardmost bore, and the scale member slid rightwardly to the desired location, following which the locking member is again engaged within another bore. With a new reference point established, the member **47** may be moved with relation thereto without the necessity of making a mental addition to each measurement made on the scale member.

The programming means **18** serves the purpose of simplifying making serial adjustments to the same predetermined position. While the above-described scale may be used for the particular value thereon is known, which corresponds to the desired position, each time the same position is established, the scale must be viewed in order to establish this position. The means **18** provides an automatically actuated indication upon the arrival of the negative carrier support element at the proper location, both with respect to horizontal and vertical axes of movement. To this end, the means **18** comprises a horizontal axis adjustment element **78** and a vertical axis adjustment element **79**.

The element **78** includes a transversely extended bar **81**, the axis of which is parallel to that of the rack **52**. Mounted upon the bar **81** is a similar rack **82** coextensive with the rack **52**, and having corresponding teeth of identical pitch. A plurality of contact clips, best seen in FIGS. **4**, **5**, and **6** are selectively engageable with the rack **82** at positions corresponding to desired points along the rack **52**. The contact clips **83** are substantially similar, each including a generally C-shaped main body **84**, the body including a base member **85**, having retaining lugs **86** at the four corners thereof. Extending upwardly from one end of the base member **85** is a vertical wall **87**, in turn supporting an upper wall **88**. A manually engageable member **89** is secured to the vertical wall **82** by a rivet **90**, the inner end of which serves as a stop to position the clip **83** with respect to the rack **82**. The upper wall **87** mounts a spring **91** adapted to engage an upper surface of the rack, while the base member **85** along the longer edges thereof is modified to provide tooth-engaging projections **92** engageable with teeth on the lower surface of the rack. The retaining lugs **86** maintain an electrically insulated member **93** against the lower surface of the base member **85**, the member **93** including a pair of lower tapering surfaces **94** and a horizontal generally centrally located surface **95** defining an elongated groove **96** therein. An electrically conductive member **97** is mounted within the groove **96**, and the axis of which is perpendicular to the axis of the rack **82** when the clip **83** is mounted.

The lamp element **98**, is mounted by screws **99** upon the member **47**, as best seen in FIGS. **1** and **2**. The element **98** includes a lamp **100** connected in series with an extensible power cord **101**, the circuit running through a pair of contact points **102**, the upper ends **103** of which are of a width corresponding to that of the conductive member **97**.

The vertical axis adjustment element **79** is generally similar, including a rack **105** vertical orientation by supporting brackets **106**, and having its own contact clips **107** engaged therewith. The lamp element **108** includes a power cord **109** cooperating with an elongated housing **110** which retracts the cord as the negative carrier is lowered.

Referring to FIG. **4** in the drawings, there is illustrated a schematic view of the elongated housing **111** which retracts the power cord **101**. The housing is mounted in fixed vertical relation upon the base **10**, and includes an open upper end having a pulley **112** tangent to one edge of the opening thereof. Disposed within the hollow interior **113** is a weighted roller **114** which engages a medial part of the cord **101**. From a consideration of this figure, it will be clear that as the cord is retracted, the weight of the roller draws a looped segment thereof into the interior of the housing, thereby preventing the cord from becoming tangled with to and fro movement of the negative carrier along a horizontal axis. The cord **109** is retracted within the housing **110** in a similar manner, with the exception that the housing **110** does not require structure corresponding to the pulley **112**.

During operation, the machine is "set up" for repeated cyclic operation by determining the positions of successive exposures on a single lithographic film or plate. This operation will normally require movement of the negative carrier in a serial fashion to several positions along a horizontal axis. As these positions are determined, individual contact clips **83** are positioned along the rack **82** in such manner that the circuit through the lamp element **98** is closed, as indicated by illu-

mination of the lamp **100**. A similar operation is carried out for the vertical axis adjustment element **79**, resulting in the locating of a plurality of corresponding contact clips **107**. Once the program has been established, repeated exposures may be interrupted at any time without disturbing this program, as for example, where a single nonrelated exposure is required, following which a return to programmed operation may be made. In making successive exposures, the operator need only initially align the vertical axis adjustment element **79** to its uppermost position, and move the negative carrier rightwardly as seen on FIG. **1**, stopping for an exposure each time the lamp **11** is illuminated. When the rightward most clip **83** has been reached, the negative carrier is adjusted so that the next lower contact clip **107** on the vertical axis adjustment element **79** is illuminated, and the cycle along the horizontal axis adjustment element **78** is repeated.

Since the obtaining of any desired degree of fineness of adjustment is already present in the device, an indication of the reaching of this degree of adjustment will depend upon the effective width of the conductive member **97**, as measured perpendicular to its own axis, and the contact area on the upper ends **103** of the contact points **102**. The contact clips **83** and **107** can be relocated when required for each succeeding programmed operation.

I wish it to be understood that I do not consider the invention limited to the precise details of structure shown and set forth in this specification, for obvious modifications will occur to those skilled in the art to which the invention pertains.

I claim:

1. In a photolithographic plate exposing machine, including a lithographic plate support, a negative carrier support movable in a plane substantially spaced and parallel to said plate support, and means for adjusting the position of said carrier support, with respect to said plate support, said last mentioned means including a rack having teeth thereon of predetermined size and pitch, improved means for indicating the adjustment of said negative carrier support to a predetermined location comprising: a second rack connected to said plate support, said rack having teeth corresponding to the teeth on said first mentioned rack, and having a principal axis substantially parallel to that of said first mentioned rack, rack adjusting means for locating said negative carrier support relative to said plate support, said rack adjusting means having teeth corresponding to the teeth on said first mentioned rack, and having a principal axis substantially parallel to that of said first mentioned rack, improved means for indicating the adjustment of said negative carrier support to a predetermined location comprising: a second rack connected to said plate support; at least one electric circuit closing means adjustably engaged with said rack, a lamp element supported by said negative carrier and having a normally open circuit means powering the same, alignment of said lamp element with said circuit closing means serving to illuminate said lamp element.

2. Structure in accordance with claim **1**, including an extensible power cord interconnected into said lamp element.

3. Structure in accordance with claim **2**, said power cord including an elongated vertically disposed housing fixed relative to said plate support, a weighted member disposed within said housing, said power cord being looped intermediate first and second ends thereof about said weighted member, whereby said power cord may be at least partially stored within said housing with movement of said negative carrier support in a direction toward said housing.

4. Structure in accordance with claim **1**, including first indicating means showing a horizontal adjustment of said negative carrier support, and second indicating means showing a vertical adjustment of said negative carrier support.

5. Structure in accordance with claim **1**, said circuit closing means including a body member having a pair of parallel rack tooth-engaging portions, and an outwardly facing elongated strip of conductive material disposed substantially parallel to said projections, said lamp element including a housing, a pair of contacts extending outwardly of said housing, said contacts lying in a plane parallel to the principal axis of said strip of conductive material to be simultaneously engaged thereby upon the arrival of said negative carrier support at predetermined location.

6. Structure in accordance with claim **1**, including a plurality of circuit closing means positioned at predetermined locations to be selectively illuminated by movement of said negative carrier support.

* * * * *