Feb. 17, 1931. H. E. BRANDT 1,792,804

DUSTER FOR PLANTS

Filed March 26, 1928 2 Sheets-Sheet 1

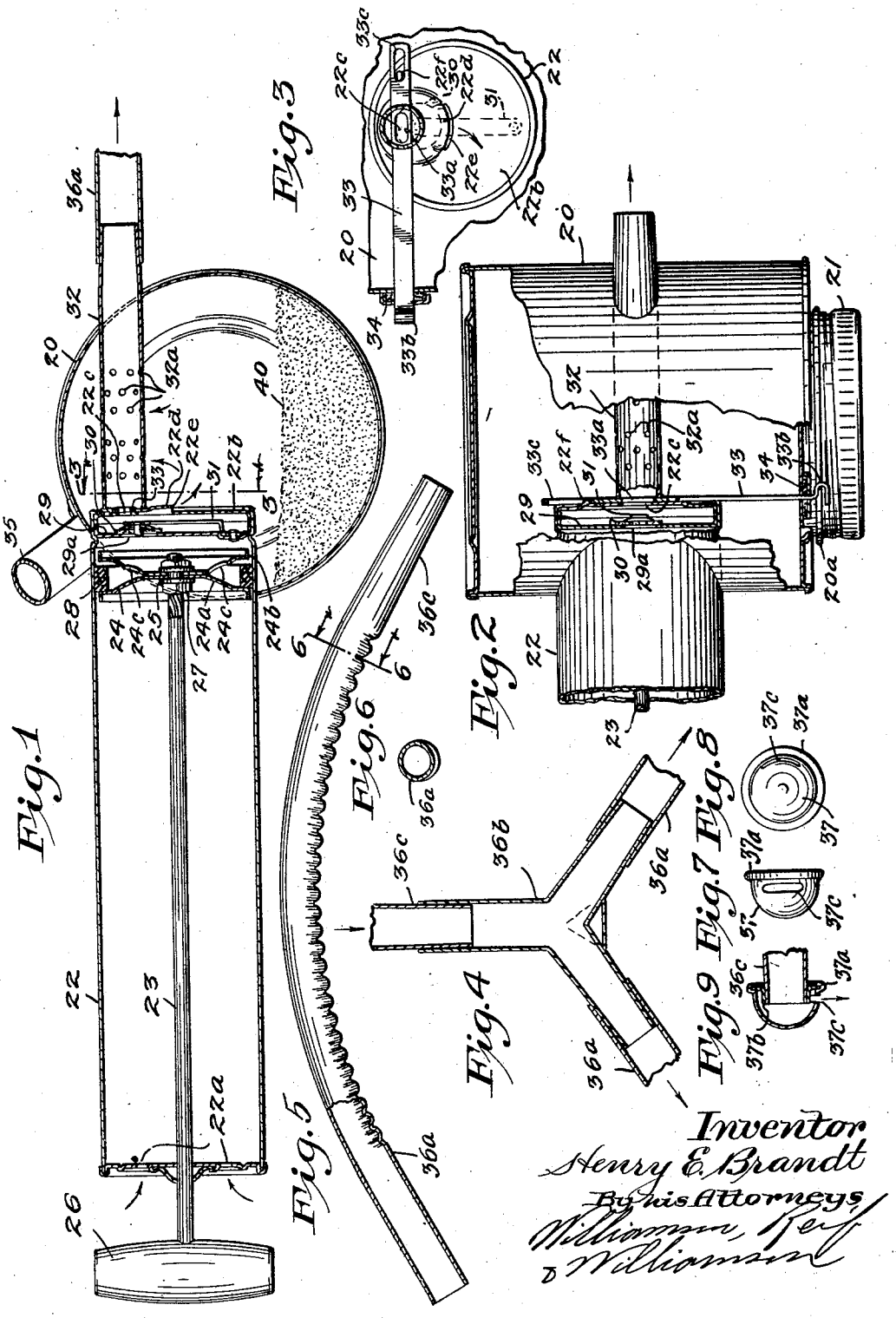

Fig. 1

Fig. 2

Fig. 3

Fig. 4

Fig. 5

Fig. 6

Fig. 7

Fig. 8

Fig. 9

Inventor
Henry E. Brandt
By his Attorneys,
Williamson, Teff
& Williamson

Feb. 17, 1931. H. E. BRANDT 1,792,804

DUSTER FOR PLANTS

Filed March 26, 1928 2 Sheets-Sheet 2

Fig. 10

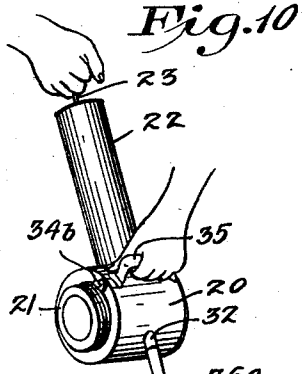

Fig. 11

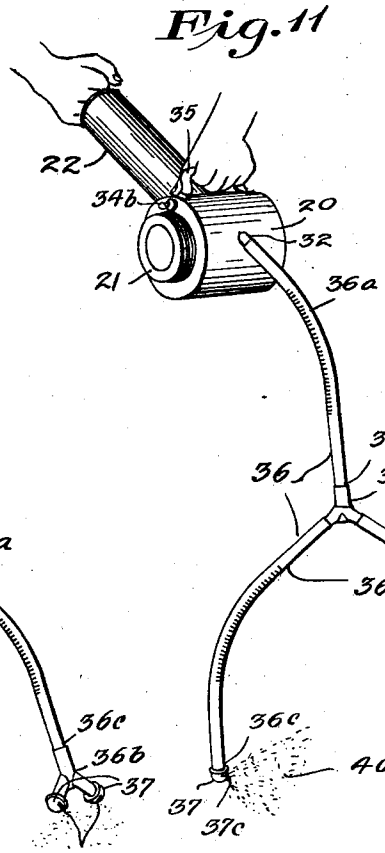

Fig. 12

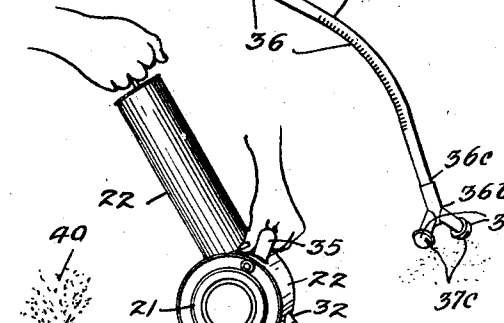

Fig. 13

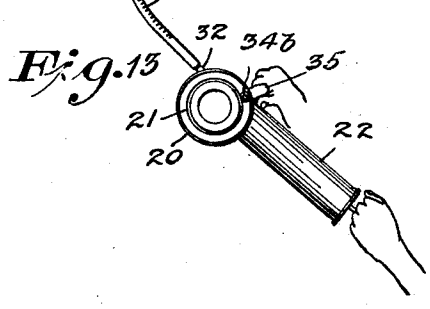

Inventor

Henry E. Brandt

By his Attorneys

Williamson, Perl

& Williamson

Patented Feb. 17, 1931 1,792,804

UNITED STATES PATENT OFFICE

HENRY E. BRANDT, OF ST. PAUL, MINNESOTA, ASSIGNOR TO THE DOBBINS MANUFACTURING COMPANY, OF NORTH ST. PAUL, MINNESOTA, A CORPORATION OF SOUTH DAKOTA

DUSTER FOR PLANTS

Application filed March 26, 1928. Serial No. 264,664.

This invention relates to a dusting apparatus, and while the invention may be used to spray dust for any desired purpose, it particularly is designed for use in spraying insecticides in the form of dust.

It is an object of this invention to provide a simple and efficient apparatus for applying dust to various objects, and one which has a simple means for regulating the volume of the dust discharged.

It is another object of the invention to provide dusting apparatus of simple construction having a container in which the dust is placed, and in which an air pressure is created to force the dust through one or more openings in the discharge pipe, together with means for regulating the amount of the air passing into said discharge pipe to regulate the volume of dust discharged.

It is still another object of the invention to provide a simple and efficient dusting apparatus having a discharge conduit comprising relatively movable curved sections, whereby the conduit may be converted into various shapes for effectively spraying the dust on different portions of the objects, such as plants.

These and other objects and advantages of the invention will be fully set forth in the following description made in connection with the accompanying drawings, in which like reference characters refer to similar parts throughout the several views and in which:—

Fig. 1 is a central longitudinal section through the device;

Fig. 2 is a top plan view of a portion of the device, certain parts being broken away and others shown in vertical section;

Fig. 3 is a vertical section taken on line 3—3 of Fig. 1;

Fig. 4 is a horizontal section through a portion of the discharge conduit;

Fig. 5 is a view in side elevation of a section of the discharge conduit, a portion being broken away and other portions shown in vertical section;

Fig. 6 is a section taken on line 6—6 of Fig. 5;

Fig. 7 is a view in side elevation of a discharge nozzle;

Fig. 8 is a view in front elevation of said nozzle;

Fig. 9 is a vertical section through said nozzle and portion of the discharge conduit;

Figs. 10 to 13 are perspective views showing the device with different arrangements of the discharge conduit therefor.

Referring to the drawings, a dusting apparatus is shown, comprising a container 20, and while this container may be of various forms, in the embodiment of the invention illustrated it is shown as substantially cylindrical. Said container has closed ends, one of which is provided with a filling spout 20*a* arranged to be closed by a threaded cap 21. A cylindrical casing 22 projects from one side of the cylinder, with its axis at right angles to the axis of said cylinder and slightly above the axis of the cylinder, said cylinder 22 forming a pump cylinder. The cylinder 22 is secured to container 20 and projects thereinto for a short distance as shown in Fig. 1. The cylinder 22 has an outer end closed save for a plurality of holes 22*a* therethrough. A plunger rod 23 moves centrally through the end of cylinder 22 and in said cylinder and has a plunger 24 secured to its inner end, said plunger comprising oppositely disposed slightly cup shaped disks 24*a* and 24*b*, axially of which rod 23 passes, washers 25 being disposed at the opposite sides of said disks and being held thereagainst by the nuts 27 engaging the same. The disk 24*a* is imperforate, while disk 24*b* has a plurality of holes 24*c* therethrough. A ring 28, preferably made of some flexible material such as light rubber, is disposed between the disks 24*a* and 24*b* and is of a diameter to snugly fit the interior of the pump cylinder 22. A handle 26 is secured to the outer end of the plunger rod 23. A diaphragm 29 is secured in the cylinder adjacent its inner end, having an aperture 29*a* therethrough, normally closed by a valve comprising a circular pad 30 carried at one end of the spring or resilient arm 31 which is secured adjacent one side of the diaphragm 29. A spout or conduit 32 is connected to the inner end 22*b* of the cylinder 22 and communi-

cates with said cylinder through an oblong opening 22*c*. A portion of the end 22*b* is also pressed outwardly as shown at 22*d* to form an opening 22*e* from cylinder 22 into the container 20, which opening is directed downwardly in said container. The portion of the cylinder 22 between diaphragm 30 and end 22*b* might be called an air pressure chamber. A flat strip or bar 33 is provided, extending transversely through conduit 32 adjacent end 22*b*, said strip having an oblong opening 33*a* therethrough, substantially the same size and shape as the opening 22*c*. The strip 33 extends through the end of container 20 and has its outer end bent into substantially the shape of a hook to form a handle 33*b*. The strip 33 is suitably packed at the end of container 20 by the packing 34. The strip 33 adjacent its inner end is also provided with an elongated slot 33*c* into which projects a tongue 22*f* struck up from the end 22*b*, said tongue forming a stop for the bar 33. The conduit 32 is provided with a plurality of openings 32*a* in the portion thereof extending through container 20 and as shown in Figs. 1 and 2, said conduit projects at the front side of the container 20 where it is slightly tapered in form. The container 20 is provided with the handle 35 at its top side adjacent cylinder 22.

A discharge member 36 is provided comprising a plurality of separable curved sections 36*a* and a connecting member 36*b*. The device is also provided with discharge nozzles 37. The nozzles 37 as shown in Figs. 7 and 8 are substantially semi-spherical in form having a flange 37*a* extending therearound at one side, in which is secured an annular member 37*b* having a cylindrical portion adapted to fit over the slightly tapered end 36*c* of one of the sections 36*a*, said sections each having one end 36*c* tapered as shown in Fig. 5. A slot 37*c* extends part way around the member 37 adjacent flange 37*a* forming the discharge opening for said nozzle. The nozzle 36 comprises the forked member 36*b*, the central branch of which is adapted to be fitted onto the tapered end of one of the sections 36*a*, and the forked ends of which are tapered and adapted to fit into the cylindrical end of one of the sections 36*a*. The nozzles 37 can also be disposed on the tapered end of member 36*b*.

In operation, the dust 40 to be sprayed will be placed in the container as indicated in Fig. 1. The operator will now dispose the discharge conduits and nozzle as desired for the particular work in hand and will hold the handle 35 with one hand and operate the handle 26 with the other hand, as shown in Figs. 10 to 13. When the handle 26 and rod 23 are drawn outwardly in cylinder 22, the ring 28 is engaged by the front disk 24*b* and moved outwardly in the cylinder, the same moving in frictional engagement with the walls of the cylinder. The air can pass around the outer side of the disk 24*a* between the same and ring 28 and through the holes 24*c*. The cylinder is thus not closed and there is no suction produced at the front end thereof as the plunger moves outwardly. When the handle 26 and plunger rod 23 are pushed inwardly, the ring 28 is engaged by the disk 24*a* and pushed inwardly. The opening across the cylinder is thus sealed by the disk 24*a* and the ring 28 and the air is pushed inwardly and compressed, the same pushing open the valve 30 and passing to the inner side of partition 29. The air then passes through opening 22*e* into the container 20 so that an air pressure is created in said container. The air discharged into container 20 blowing down on the dust 40, agitates the same, so that the dust in the container is churned up and mixed with the air. The air passes out of the container 20 through the holes 32*a* through the spout or conduit 32 and carries the dust therewith. The dust is thus discharged in divided condition and thoroughly mixed with the air. When the air is discharged to the front side of partition 29, it will pass through the openings 22*c* and 33*a* if the same are in alinement or partially in alinement. If the strip 33 is moved so that the openings are in alinement, there will be a direct opening into the end of conduit 32 of the size of openings 22*c* and 33*a*. With this arrangement most of the air will pass directly into spout 32 and there will be a minimum of air discharged into container 20 to pass through the holes 22*a*. In fact, the air being discharged into the tube 32 will tend to prevent the entrance of air through said holes. There will thus be little dust sprayed out through tube or spout 32. The strip 33 can be moved to more or less cover the opening 32*c* and as less of said opening is exposed, more dust will be discharged through the member 32 and from the device. When the opening 22*c* is entirely closed by the strip 33, the device will have its maximum discharge.

With the discharge conduits 36 and nozzles 37, the dust can be directed in a great many different ways. It is desirable, in order to reach many insects which infest the lower side of leaves of plants, to spray the dust upwardly. This can be done by arranging the conduit and nozzles as shown in Fig. 12. It will be seen that the nozzles 37 can be rotated to direct the opening 37*c* in any direction. With the sections disposed as shown in Fig. 12, the dust will be directed through the end sections and one nozzle will direct the same downwardly on the plant while the other will direct the same upwardly so as to reach the under side of the leaves. The plant is thus effectively dusted both on the tops of the leaves and the bottoms of the leaves.

It is often desirable to spray the plant from either side and the operator can move along a row of plants and spray the plants

from both sides. When this is done, the nozzles and sections will be arranged as shown in Fig. 11.

At other times it may be desired to spray merely the tops of the plants, as when small plants are being treated. The nozzles could then be placed directly on the fork member 36*b* as shown in Fig. 10 and a shower of the dust will be discharged from each nozzle downwardly onto the plants.

It is also possible to use only one discharge conduit, at which time the member 36*b* is not used. This arrangement is shown in Fig. 13. It will be seen that conduits 36*a* can be arranged so that the sprayer can spray a tree or vine overhead. It is obvious that the sprayer can be directed upwardly with the other arrangements of the sections described.

The sections 36*a* are as shown, rotatable on each other and on spout 32 as well as on forked member 36*b*. The member 36*b* is also rotatable on sections 36*b* or on spout 32. The members 36*a*, 36*b* and nozzle 37 are held in place by friction.

From this description it will be seen that the sections 36*a* and nozzles 37 can be arranged in a great variety of ways to most effectively treat the particular object or plant being sprayed. The container 20 can be turned into various positions and the dust will not pass into opening 22*e* in any quantity, as said opening is protected by the struck up portion of end member 22*b*.

From the above description it will be seen that applicant has provided quite a simple and efficient dusting apparatus and one in which the volume of dust discharged may be nicely regulated, and one having a great capacity for dusting the desired part of the plant. The device is quite simple in construction and can be easily and inexpensively made and assembled.

It will, of course, be understood that various changes may be made in the form, details, arrangement and proportions of the parts, without departing from the scope of applicant's invention, which, generally stated, consists in a device capable of carrying out the objects above set forth, in the novel parts and combinations of parts disclosed and defined in the appended claims.

What is claimed is:—

1. A dusting apparatus having in combination, a container for the dust, a discharge conduit through which the dust passes from said container, having one or more openings communicating with said container, means for forcing air into said container, and means for directing more or less air directly into said conduit to regulate the volume of dust discharged.

2. A dusting apparatus having in combination, a container for the dust, a discharge conduit through which the dust passes from said container having one or more openings communicating with said container through which air and dust pass into said conduit, a chamber in which air is forced under pressure communicating with said container, said conduit having an opening into said chamber, and means for regulating the size of said latter opening whereby more or less air passes directly through said conduit.

3. A dusting apparatus having in combination, a container for the dust, a discharge conduit through which the dust passes from said container, an air chamber into which air is forced under pressure having an opening into said container, said conduit passing through said container and having an opening communicating with said chamber, said conduit being perforated in the portion passing through said container, and means for varying the size of said opening from said chamber into said conduit, to vary the amount of dust discharged.

4. A dusting apparatus having in combination, a container for the dust, a discharge conduit extending through said container having perforations in the portion disposed in said container through which dust passes thereinto, a pump cylinder extending from said container, an air chamber at the end of said pump cylinder adjacent said container and having an opening into said container, said conduit extending to said air chamber and having an opening at its end communicating with said air chamber, and a valve for regulating the size of said last mentioned opening to vary the amount of dust discharged.

5. A dusting apparatus having in combination, a container for the dust, a discharge conduit extending from said container and passing thereinto having perforations in the portion disposed in said container through which air and dust pass into said conduit, a pump cylinder carried by said container extending at the opposite side of said container, the axes of said conduit and pump cylinder being substantially parallel, said pump cylinder extending into said container and having an air chamber in its inner end into which air is forced, said chamber having an opening into said container, said conduit extending to said air chamber and having an opening at its end into said chamber, and a laterally slidable member extending over said opening and having a similar opening therein whereby the openings in said conduit and in said slidable member may be brought more or less into alinement.

In testimony whereof I affix my signature.

HENRY E. BRANDT.