May 12, 1964 J. W. SOFFER 3,132,774

TILT-OPENING VALVES FOR DISPENSERS

Filed April 24, 1959

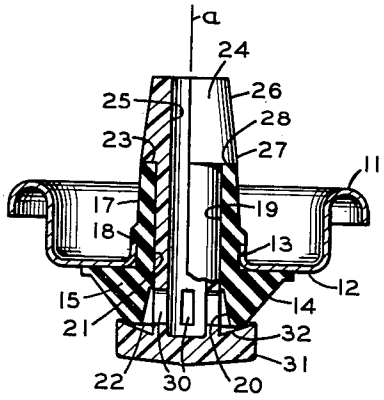

FIG. 1

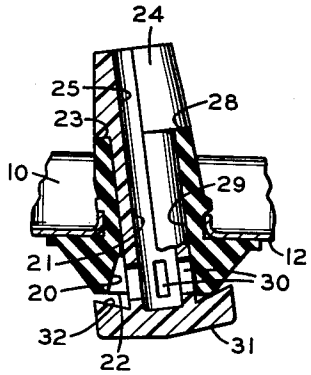

FIG. 2

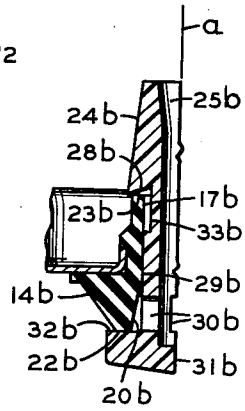

FIG. 5

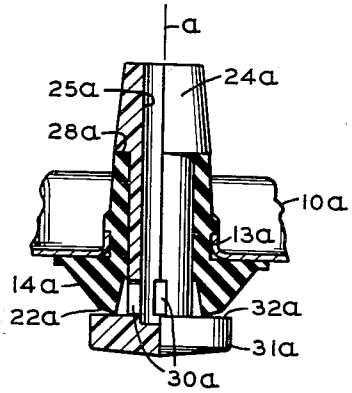

FIG. 3

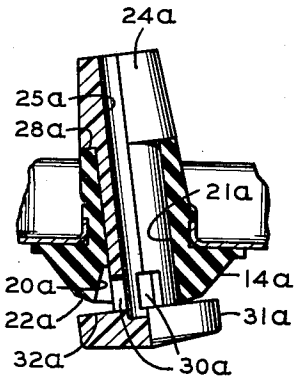

FIG. 4

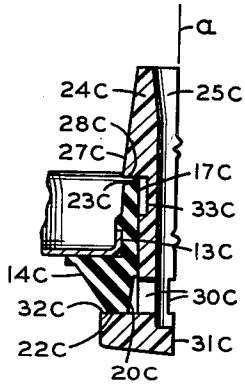

FIG. 6

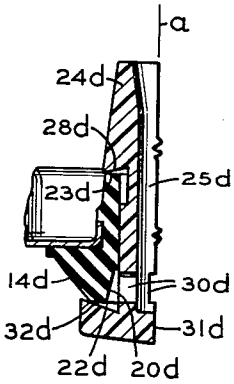

FIG. 7

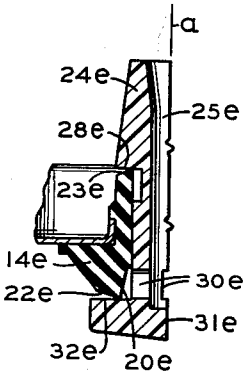

FIG. 8

INVENTOR.
JACK W. SOFFER
BY Jerome A. Gross,
ATTORNEY

United States Patent Office

3,132,774

Patented May 12, 1964

1

3,132,774

TILT-OPENING VALVES FOR DISPENSERS

Jack W. Soffer, St. Louis, Mo., assignor, by mesne assignments, to The Clayton Corporation of Delaware, St. Louis, Mo., a corporation of Delaware

Filed Apr. 24, 1959, Ser. No. 808,761
1 Claim. (Cl. 222—394)

The present invention relates to valves for dispensing containers, and particularly to the simple, single use tilt-opening type of dispensing valve in common use for whipped cream or other products discharged under the pressure of gas within the dispensing container.

Valves of the type mentioned normally include an apertured top wall for the single use pressure container, a rubber-like seal and a tubular dispensing provision. In one specific type to which this invention relates, the tubular seal mounts a rigid valving stem whose outer wall is sealingly embraced by an inner spout-sealing surface of the seal. Such valves may also have other components, but those mentioned will suffice for many uses, provided they are well designed in their detailed parts.

For such a simple design, particularly where the rubber seal is itself relied upon to restore the rigid valving stem to erect, closed position, one of the problems has been to insure the necessary sealing and restoring tendency and yet provide for easy, well-controlled dispensing. It is the principal object of the present invention to so improve the detailed design of such a simple valve as to achieve better control over the rate of dispensing throughout the range of travel of the dispensing stem, and at all angles at which the stem may be tilted; and to lessen the tilting force required, so that the user may readily control the dispensing with the pressure of a finger tip and maintain such control without any tendency of the contents to spurt. A further purpose is to achieve these ends without impairing the reliability of sealing.

Other purposes will be apparent from the specification as a whole,

These purposes are here attained by taking account of the fact that, in such a simplified valve, the detail design should provide for opening the valve without displacing or "bunching" rubber-like material in the region or regions where a sliding contact is to be made. The present invention utilizes the idea not immediately apparent, that a valving stem which opens by tilting in a resilient seal, rocks rotatively not merely with respect to the top wall of the container but also with respect to the seal; and this rocking within the seal should be facilitated; and not be impeded by displacing or "bunching" the rubber-like material of the seal. The present idea is contrary to the prior art practice of tapering a valve head so that its slope, measured outwardly from the valve axis, is away from the aperture in which the valve is mounted. The prior art practice was useful for seating valves which would open by being pressed downward. It has not heretofore been realized that a taper, designed for improved seating of an axially movable valve, interferes with easy operation of a tiltable valve.

Accordingly, the present invention provides, in general, for a dispensing valve including a dispensing stem held by a tubular elastic seal mounted in a circular aperture in the dispenser wall, the seal including a sleeve portion which extends through the wall. The outer sleeve surface seals within the aperture and its inner surface seals about the outer wall of a dispensing stem. At a level remote from the level of the aperture, the seal and stem have faces which press against each other and which incorporate the unique details of the present invention. In the preferred embodiments, this provision is within the container; it requires the forming of the lower end surfaces of the seal and the seating portion of the valve stem in

2

such manner that the surface of one of them has a slope inclined toward the level of the container aperture when measured outwardly from the axis of the aperture. The surfaces do not make broad surface contact with each other; the slope so provided facilitates rocking the stem within the seal, to draw away from the closing contact in an easy, gradual manner and permit well-controlled dispensing. For further ease of operation, an annular gap is provided between the outer wall of the stem and the inner tubular surface of the seal in the region adjacent the contact faces; this makes for even easier rocking of the stem with reference to the seal.

In alternative embodiments, similar provisions are made at a level outside the container, where the outer end surface of the sleeve presses against a flange on the valve stem. By recessing the outer surfaces of the stem adjacent these surfaces, a similar gap is provided; and sloping either the outer end face of the sleeve or the face on the stem flange permits easier tilting of the stem within the seal.

The foregoing inventive principles are utilized in each of the several embodiments of invention shown in the drawings, in which:

FIGURE 1 is a sectional view (the right half thereof being partly in elevation) of a valve embodying the present invention, the slope aforementioned being provided by the inclination of the closing face of the valve head, which is here shown in closed position.

FIGURE 2 is a view of the valve of FIGURE 1 showing the stem tilted to an open position.

FIGURE 3 is a view similar to FIGURE 1 of a modified embodiment wherein the slope is provided by an inclination of the valve-seating end face of the resilient seal.

FIGURE 4 is a view of the embodiment shown in FIGURE 3, tilted to an open position.

FIGURE 5 is a view, similar to the left half of the FIGURE 1, of a further modified embodiment wherein the slope is provided by an inclination of the annular face of a stem flange.

FIGURE 6 is a view, similar to FIGURE 5, of still another embodiment wherein the slope is provided by an inclination of the outer end face of the tubular elastic seal sleeve.

FIGURE 7 is a view, similar to FIGURE 5, of still another embodiment which substantially combines the detail features of the embodiment of FIGURES 1 and 5.

FIGURE 8 is a view, similar to FIGURE 5, showing still another embodiment, this one including the detail features of the embodiments of both FIGURES 3 and 6.

The embodiment of FIGURE 1 will be first described because its working is perhaps most readily apparent. There is provided a mounting cup **10** having an outstanding rim **11** which fits over the mouth of a dispensing container (not shown), further having a wall portion **12** which serves as the top wall for the dispensing container. The wall portion **12** includes a circular aperture **13**, formed and outwardly flanged about axis *a* perpendicular to the wall **12**.

A tubular elastic seal generally designated **14** is formed of rubber-like material. It includes a seal body portion **15** enlarged to provide a large washer-like sealing surface against the inner side of the wall portion **12** adjacent the aperture **13**; and a sleeve portion **17** extending through the aperture **13** and having an outer sleeve surface **18** presented sealingly within and against the flange of the circular aperture **13**. The elastic seal **14** has an inner bore **19** and a lower end counterbore portion **20** which are concentric with the axis *a* when the sleeve is not distorted. The inner bore **19** includes a stem-sealing surface at the level of the circular aperture **13**; this stem-sealing surface **21** may include a constricting girdle such

as is shown in U.S. Patent No. 2,831,617 to J. W. Soffer issued April 22, 1958.

The seal **14** has two annular end faces; and both of them are at levels, taken along the axis *a*, which are remote from the level of the circular aperture **13** of the wall **12**. The seal annular end faces are the valve seating end face **22** at the lower (or inner) end of the seal, and the sleeve end face **23** at the outer end of the sleeve portion **17**.

Cooperating with these elements is the tubular valving stem generally designated **24**, which is formed of rigid or substantially rigid material such as a strong plastic. By the term "rigid" is here meant a material which has relatively little elastic deformation under load, compared to the rubber-like elastic deformation of the tubular seal **14**. The tubular valving stem **24** has a central passage **25** and outer manipulative tip portion **26**. The tip portion has a lower margin at which is formed a stem flange or shoulder **27** adjacent to the sleeve portion end face **23**, which at least partially contacts an inwardly presented face **28** of the flange or shoulder **27**.

The tubular valving stem **24** has an outer stem wall **29** which is sealingly embraced by the stem-sealing surface **21** of the tubular seal **14** at the level of the wall portion **12**. Beneath (that is, inwardly of) this level, several lateral stem ports **30** are provided through the stem wall, these being located within the counterbore portion **20** of the seal **14**. Adjacent to the stem ports **30**, the tubular valving stem **24** is closed off at its inner end by an integral valve head **31**, which is of substantially larger diameter than the diameter of the outer stem wall **29**. This difference in diameter provides the area for an annular closing face **32**, which is sealed by contacting the stem-sealing surface **21** at the inner end of the tubular seal **14**. The closing face **32** is of greater width than the stem-sealing surface **21**; it extends both radially inward and radially therefrom.

It will be noted from FIGURE 1 that the end face **22** is there shown as being in a horizontal plane; but the closing face **32** of the valve head **31** slopes, it being inclined toward the level of the wall aperture **13** when measured radially outward from the axis *a*. It is also to be noted that the counterbore **20** within the lower end of the tubular elastic seal **14** provides an annular gap adjacent to the stem-sealing surface **21**, the gap being between the inner counterbore surface **20** and the outer stem wall **29** in the region of the valve stem ports **30**.

Preferably the fit of the seal **14** between the stem shoulder **27** and the valve head closing face **32** is fairly tight, the elastic material of the seal **14** being somewhat compressed. Then, in the valve-closed position shown in FIGURE 1, there will be a positive line contact between the horizontal end face **22** and the sloping closing face **32** of the valve head **31**. When the stem **24** is tilted from the perpendicular, as shown in FIGURE 2, so as to permit the passage of contents from the container between closing face **32** and the valve-seating end face **22** of the seal (and then through the stem ports **30** and outward by way of the passage **25**) the stem **24** will have a greater rotative tendency than the seal **14**.

It will now be apparent how the detail design features aid, rather than interfere with, the rotative tendency of the stem **24**. The slope of the valve head closing face **32** permits the valve stem **24** to be rotated and to slide with reference to the valve-seating end face **22** without undue pressure. The annular gap provided inside the lower end counterbore portion **20** facilitates the sliding and permits the greater rotative rocking of the valve stem **24** without any "bunching" of the elastic material of the seal **14**. The slope of the closing face **32** may conveniently be about 20 degrees (with very substantial latitude however in the actual angularity) which slope, measured radially outward from the axis, inclines toward the level of the wall aperture **13**.

While the foregoing embodiment and its action are perhaps most readily understood, I prefer for molding, to utilize the embodiment shown in FIGURES 3 and 4, which is identical with the embodiment heretofore described except that in this instance the closing face **32*a*** of the valve head **31*a*** is horizontal, and the valve-seating end face **22*a*** of the elastic seal **14*a*** is sloped, at an inclination which, measured radially outward from the axis *a*, slopes toward the level of the wall aperture **13*a***. Because of the identity of the parts in all other particulars, they are given the same detail parts numbers as the corresponding parts in the embodiments shown in FIGURES 1 and 2. I prefer to use the embodiment of FIGURE 3 and 4 for the practical ease of molding the parts. However, it will be seen that easy tilting rotation of the valve stem **24*a*** in the embodiment of FIGURE 3, is permitted by the same factors as permit such tilting in FIGURE 1. These factors, as stated, are a slope of one of the faces which mate within the container for closing the valve, which slope is toward the level of the wall aperture when measured radially outward from the axis; and the annular gap provided within the counterbore **20** of the seal **14*a***. The angularity of the valve-seating end face **22*a***—that is, its slope from the horizontal—is preferably about 20°, the same as heretofore described.

The alternate embodiment shown in FIGURE 5 has many features in common with the preceding described embodiments. The tubular valving stem therein is designated **24*b***, and the elastic seal is designated **14*b***. In this embodiment, both the valve-seating end face **22*b*** and the closing face **32*b*** of the valve head are horizontal. The outer end sleeve face **23** is also horizontal, but the inwardly presented annular face **28*b*** has a slope, it being inclined toward the level of the wall aperture when measured radially outward from the axis *a*. Further, the outer stem wall **29*b*** is provided at its upper end, adjacent to the annular face **28*b***, with a recessed surface portion **33*b***, which provides an annular gap between the inner tubular surface of the seal sleeve portion **17*b*** adjacent of the sleeve portion end face **23*b***. By reason of the recessed portion **33*b***, the inwardly presented face **28*b*** on the stem flange **27*b*** is of greater width, radially, than the sleeve end face **23*b***. The detail design of these parts duplicates to a great extent, on the outer side of the container, what was provided in FIGURE 1 on the inner side of the container. Thus (although it is preferable to provide for these features in connection with the operation of the valve head) to a certain measure there follows the same easing of the valve stem for rocking relative to the seal.

FIGURE 6 provides for a stem generally designated **24*c*** having a horizontal face **28*c*** on the stem flange **27*c*** outwardly of the wall **12*c***. The face **28*c*** is radially enlarged by virtue of a stem wall recess **33*c*** adjacent thereto; and the sleeve end face **23*c*** slopes toward the level of the wall aperture **13*c*** when measured radially outward from the axis *a*.

In the two alternative embodiments of invention shown in FIGURES 7 and 8, the details of construction provide such slopes on one of the pairs of faces inwardly of the container and also on one outwardly of the container. Thus, in FIGURE 7, the slopes are provided on the closing face **32*d*** and the stem flange face **28*d***; whereas in FIGURE 8 the slopes are provided on the valve-seating end face **22*e*** and the seal sleeve end face **23*e***. The other parts are numbered in correspondence with the pattern of numbering employed on the earlier-described figures.

Other variations in detail features, and in form and proportion will occur to those skilled in the art. The claim should not, therefore, be construed narrowly, but instead as fully coextensive with their terms.

I claim:

A dispenser including a container having an apertured top wall, a valve comprising a resilient tubular seal member engaged in the apertured wall and having one end portion disposed inward of the container and the other end portion disposed outwardly of the container, a tubular

stem member of rigid material engaged coaxially in the seal member, said tubular stem terminating outside of the container in a dispensing tip, an annular shoulder extending laterally of the stem and engaging said seal member, said tubular stem terminating inside of the container in a valve head engaging the tubular seal member inwardly of the container, the stem member having a stem port adjacent to the valve head, the stem member being supported by the tubular seal member between the shoulder on said stem and the valve head, the stem member adapted to be tilted arcuately about an intermediate pivot point to open the valve, the end portion of the seal member disposed inward of the container having a counterbore recess through which the stem member pivots in the arcuate tilting movement thereof, said last named end portion of the

seal member having an end face surrounding the counterbore recess, said end face having a slope of substantially 20° from the horizontal, the face of the valve head engaging said seal member being substantially horizontal, the slope of the end face of said seal member providing a sloping slide contact surface during tilting movement of the stem member to prevent substantial compression of the seal member.

References Cited in the file of this patent

UNITED STATES PATENTS

2,570,909	Benson et al.	Oct. 9, 1951
2,704,172	Lapin	Mar. 15, 1955
2,889,086	Collins	June 2, 1959