F. M. McMEEKIN.

Improvement in Plows.

No. 132,679. Patented Oct. 29, 1872.

Fig. 2.

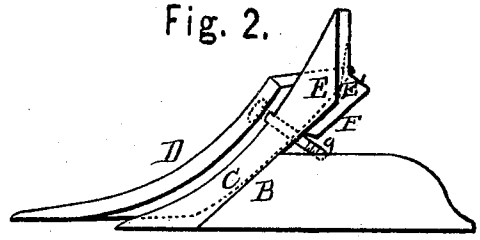

Fig. 3.

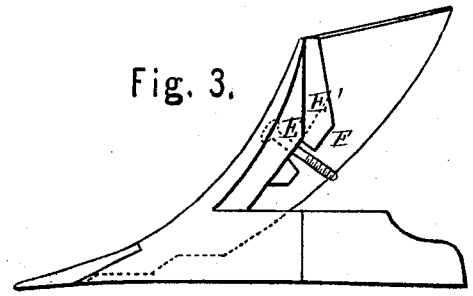

Fig. 5.

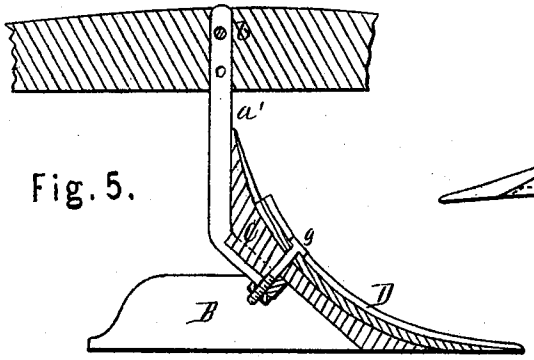

Fig. 1.

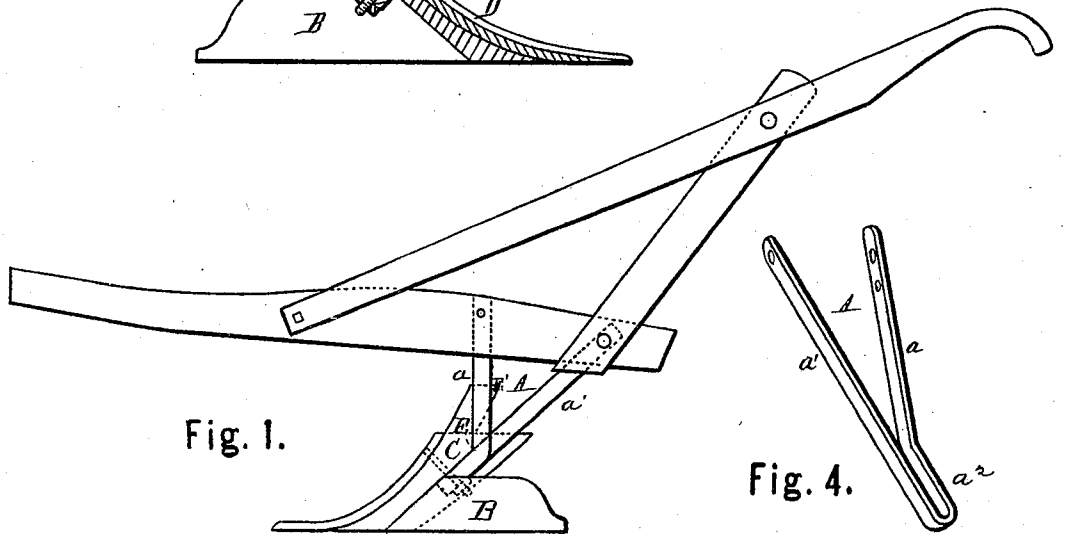

Fig. 4.

WITNESSES.

Villette Anderson.

Geo. E. Upham.

INVENTOR.

F. M. McMeekin,

Chipman Hosmer & Co

Attys

A.M. PHOTO-LITHOGRAPHIC CO. N.Y. (OSBORNE'S PROCESS.)

UNITED STATES PATENT OFFICE.

FRANCIS M. McMEEKIN, OF ORANGE SPRINGS, FLORIDA.

IMPROVEMENT IN PLOWS.

Specification forming part of Letters Patent No. **132,679**, dated October 29, 1872.

To all whom it may concern:

Be it known that I, FRANCIS M. McMEEKIN, of Orange Springs, in the county of Putnam and State of Florida, have invented a new and valuable Improvement in Plows; and I do hereby declare that the following is a full, clear, and exact description of the construction and operation of the same, reference being had to the annexed drawing making a part of this specification and to the letters and figures of reference marked thereon.

Figure 1 of the drawing is a representation of a side view of my invention; Figs. 2, 3, and 4 are details of the same; and Fig. 5 is a sectional view of the same.

My invention has relation to plows, and is an improvement on the plow for which Letters Patent were granted to me bearing date September 18, 1866, and numbered 58,119. This invention consists in the construction and novel arrangement, as hereinafter described, of the wing which projects from the adjustable land-side and serves as a saddle to support the mold-board, and of the novel construction of the mold-board when said wing is wanting.

In the drawing, A designates the standard formed from a single rod or bar of metal bent double and its arms a a^1 diverged so that one shall stand vertical and the other oblique. From the part of the standard where the arms begin to diverge to the lower end a loop, a^2, formed by the bending of the bar, extends as shown, on a line with the oblique arm a^1. The arm a^1 is pivoted to the side of the draft-beam, while the arm a passes through a vertical slot in the beam, and is secured by means of a transverse bolt, b. The arm a has several holes bored through it, and is, therefore, adjustable to regulate the inclination of the loop. In Figs. 1, 2, and 5, B represents the land-side, having the wing or saddle C adapted to receive and support the mold-board D. The under surface of said wing is constructed with an angular shoulder, E, the sides of which coincide with the angular recess formed at the junction of the loop with the vertical arm of the standard. At the inner side of said shoulder a faucet, E′, is formed, and adapted to fit closely against the adjacent side of the vertical arm of the standard A. A flange or tongue, F, is formed upon, or slightly below, said faucet to pass between the side of the loop. This flange may be in one piece or in two. In the latter case the bolt g which passes from the mold-board through the wing, and loop will pass between the two parts of said flange. Otherwise the bolt will pass below said flange, as shown in Fig. 1. The angular shoulder E, faucet E′, and flange F may be formed as well on the under surface of a mold-board. Their function is to render the mold-board rigid. The angle of the plane of the mold-board to that of the land-side may be provided for in the manufacture of the plow by properly forming the faucet.

What I claim as new is—

1. A mold-board, or mold-board saddle, having on its under side the angular shoulder E and faucet E′, in combination with a standard, A, formed by so bending a single bar of metal as to produce the arms a a^1, diverging backward and forward, and loop a^2, substantially as specified.

2. A mold-board, or mold-board saddle, constructed with the angular shoulder E, faucet E′, and flange F, arranged substantially as specified.

In testimony that I claim the above I have hereunto subscribed my name in the presence of two witnesses.

F. M. McMEEKIN.

Witnesses:
T. S. HAUGHTON,
H. R. TEASDALE.