(No Model.) 6 Sheets—Sheet 1.

E. L. BAKER.

COTTON HARVESTING MACHINE.

No. 459,623. Patented Sept. 15, 1891.

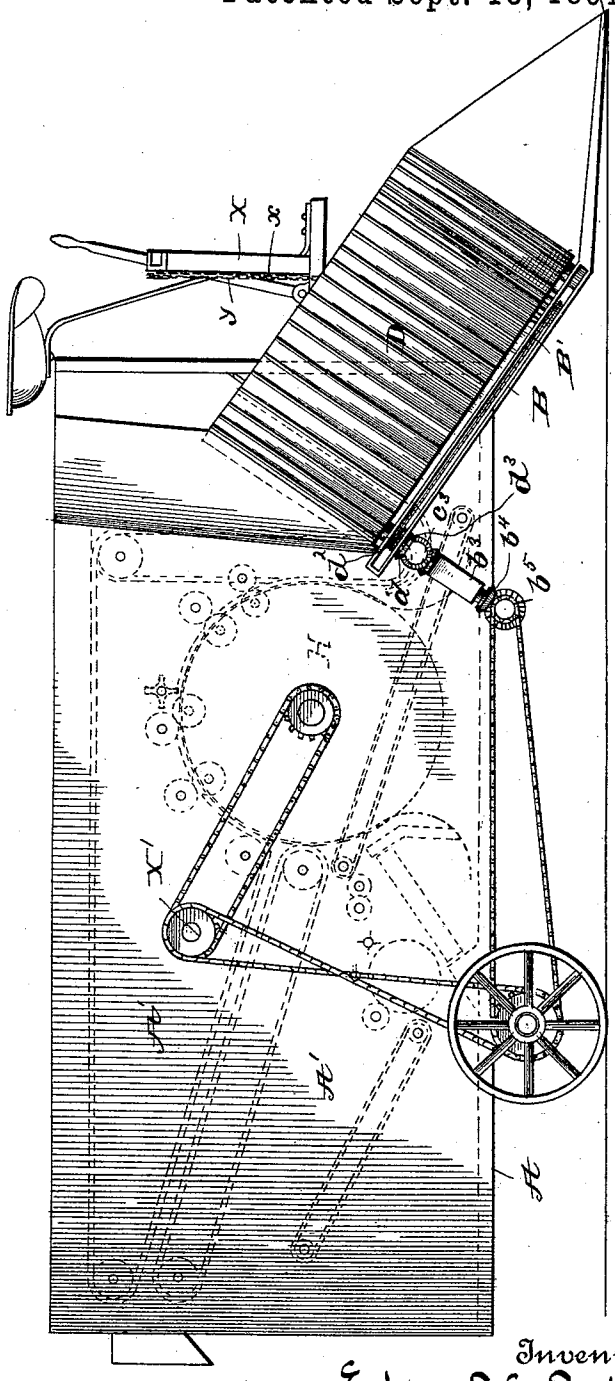

Fig. 1.

Witnesses

G. A. Taubenschmidt.

L. B. Whitaker

Inventor

Edward L. Baker

By his Attorneys

Whitaker & Prindle

THE NORRIS PETERS CO., PHOTO-LITHO., WASHINGTON, D. C.

(No Model.) 6 Sheets—Sheet 2.

E. L. BAKER.

COTTON HARVESTING MACHINE.

No. 459,623. Patented Sept. 15, 1891.

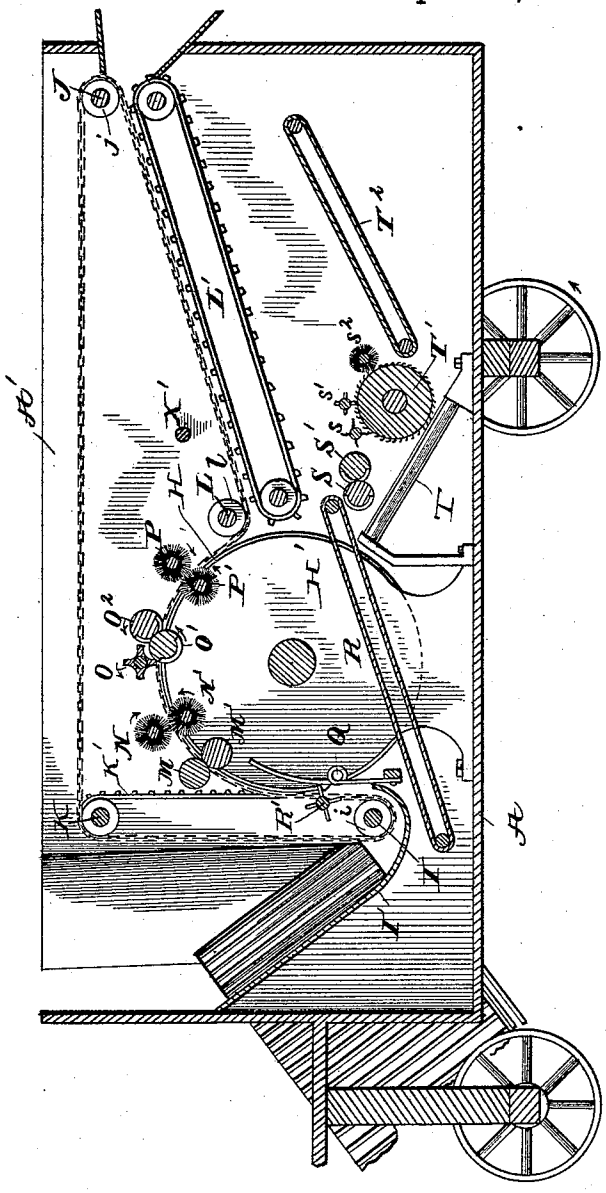

Fig. 2.

Witnesses

G. A. Taubenschmidt

L. B. Whitaker

Inventor

Edward L. Baker

By his Attorneys

Whitaker & Prevost

THE NORRIS PETERS CO., PHOTO-LITHO., WASHINGTON, D. C.

(No Model.) 6 Sheets—Sheet 3.

E. L. BAKER.

COTTON HARVESTING MACHINE.

No. 459,623. Patented Sept. 15, 1891.

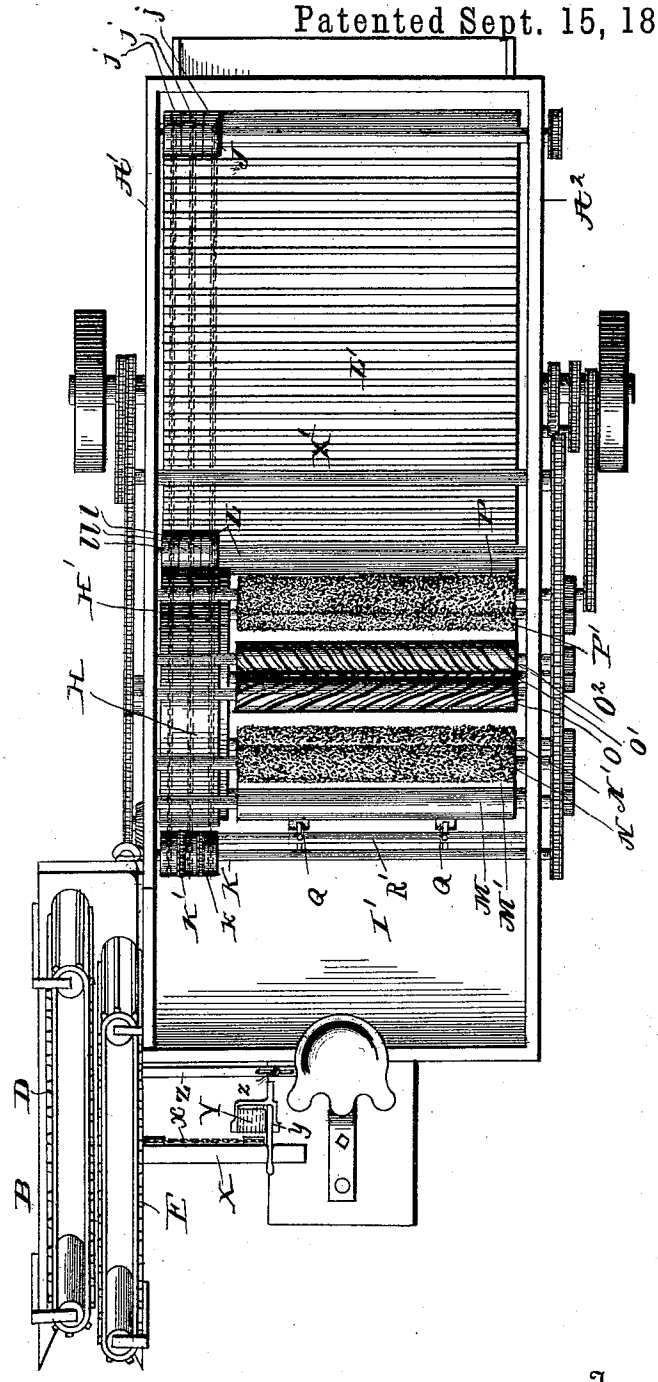

Fig. 3

Witnesses

G. A. Taubenschmidt,

L. B. Whitaker

Inventor

Edward L. Baker

By his Attorneys

Whitaker & Prevost

THE NORRIS PETERS CO., PHOTO-LITHO., WASHINGTON, D. C.

(No Model.) 6 Sheets—Sheet 4.

E. L. BAKER.

COTTON HARVESTING MACHINE.

No. 459,623. Patented Sept. 15, 1891.

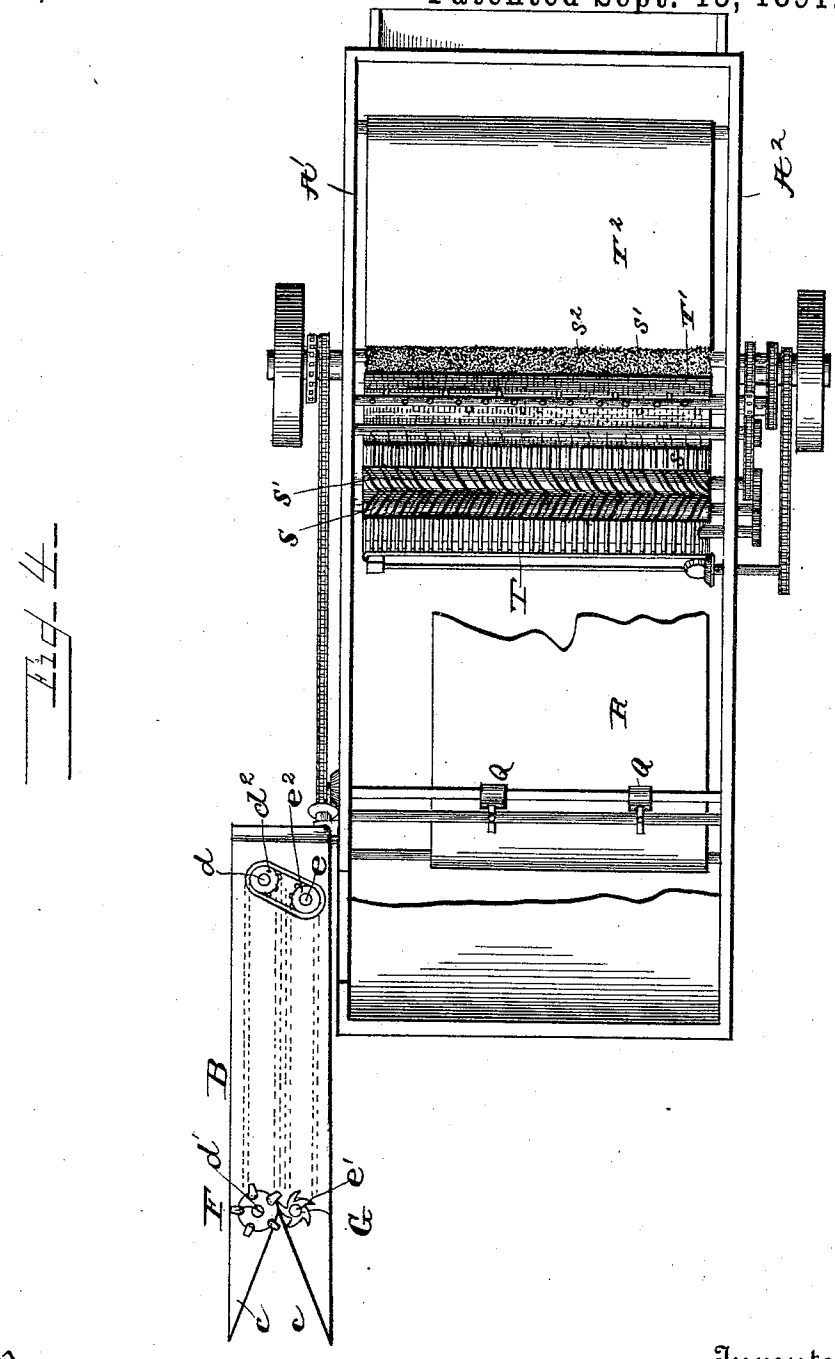

Fig. 4.

Witnesses

G. A. Taubenschmidt

L. B. Whitaker.

Inventor

Edward L. Baker

By his Attorneys

Whitaker & Prouse

THE NORRIS PETERS CO., PHOTO-LITHO., WASHINGTON, D. C.

(No Model.) 6 Sheets—Sheet 5.

E. L. BAKER.

COTTON HARVESTING MACHINE.

No. 459,623. Patented Sept. 15, 1891.

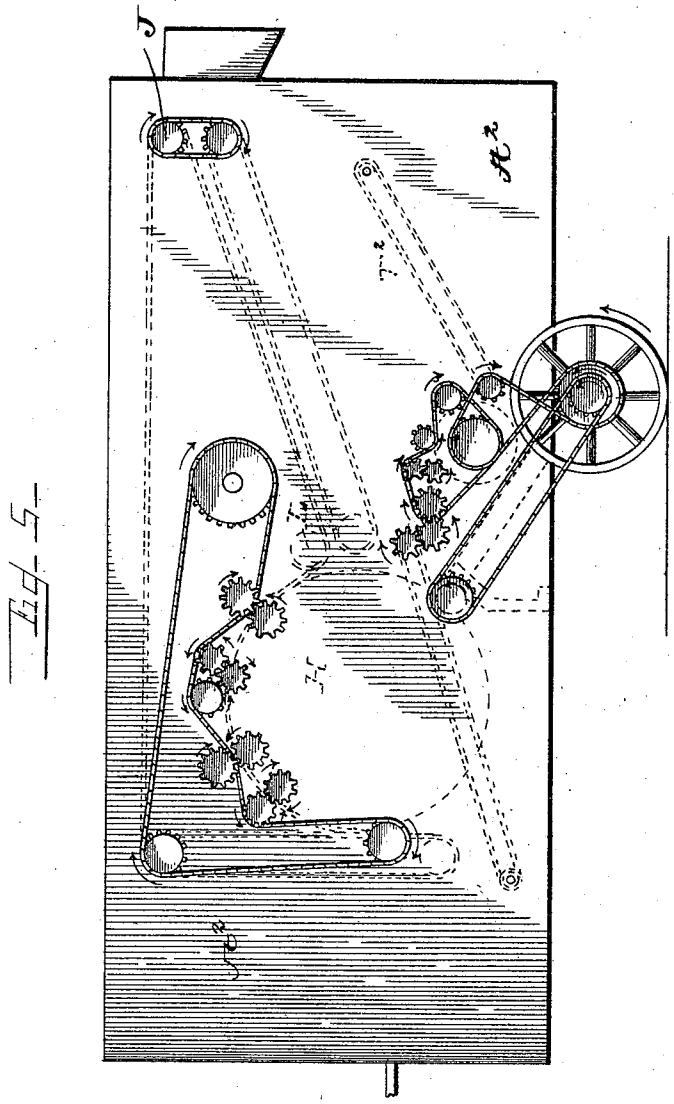

Witnesses
G. A. Faubeschmidt,
L. B. Whitaker.

Inventor
Edward L. Baker
By his Attorneys
Whitaker & Prout

THE NORRIS PETERS CO., PHOTO-LITHO., WASHINGTON, D. C.

(No Model.) 6 Sheets—Sheet 6.

E. L. BAKER.

COTTON HARVESTING MACHINE.

No. 459,623. Patented Sept. 15, 1891.

Fig. 6.

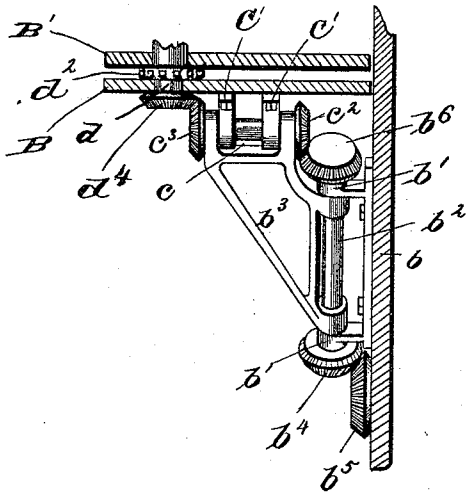

Fig. 7.

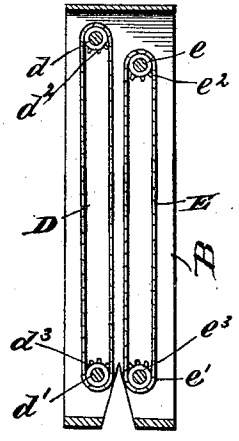

Witnesses
G. A. Taubenschmitt
L. B. Whitaker.

Inventor
Edward L. Baker
By his Attorneys
Whitaker & Prindle

THE NORRIS PETERS CO., PHOTO-LITHO., WASHINGTON, D. C.

UNITED STATES PATENT OFFICE.

EDWARD LARRABEE BAKER, OF RACINE, WISCONSIN.

COTTON-HARVESTING MACHINE.

SPECIFICATION forming part of Letters Patent No. 459,623, dated September 15, 1891.

Application filed April 10, 1889. Renewed March 23, 1891. Serial No. 386,027. (No model.)

To all whom it may concern:

Be it known that I, EDWARD LARRABEE BAKER, a citizen of the United States, residing at Racine, in the county of Racine and State of Wisconsin, have invented certain new and useful Improvements in Cotton-Harvesting Machines; and I do hereby declare the following to be a full, clear, and exact description of the invention, such as will enable others skilled in the art to which it appertains to make and use the same.

My invention relates to cotton-harvesters, and has for its object to provide a machine which will sever the stalks of cotton-plants from the ground, carry them through the machine, which will strip the cotton from the stalks, and discharge them from the machine.

In the accompanying drawings I have illustrated one form in which I have contemplated embodying my invention, and it is fully disclosed in the following specification and claims.

In the said drawings, Figure 1 is a right side elevation of my improved cotton-harvester, some of the operative parts being indicated in dotted lines. Fig. 2 is a longitudinal vertical section through the center of the machine. Fig. 3 is a top plan view of the operative parts. Fig. 4 is a similar view, the aprons of the picker-platform and other parts of the machine being removed to show those located beneath. Fig. 5 is a left side elevation of the main body of the machine, showing the gearing for the operative parts. Fig. 6 is a detail view of the construction for attaching the picker-platform to the main body of the machine. Fig. 7 is a sectional view of the picker-platform, showing the gearing for the parts mounted thereon.

The main body of the harvester consists of a rectangular box-like frame comprising the bottom or main platform A and the sides A′ A^2, with suitable end pieces, and a roof or top may be employed, if desired. The main body is provided with axles and supporting-wheels in any preferred manner. Near the forward end of the main body, and preferably at the right of the same, is an inclined platform B, which I term the "picker-platform," which is connected to the main body by a connection permitting movement of said picker-platform in all directions. This is accomplished, preferably, by means of the construction shown in Fig. 6, and the said connection is such that power may be transmitted from a shaft on the main body to devices located upon the picker-platform in whatever position said platform may be placed. The side A′ of the main body is provided with a casting *b*, bolted or otherwise secured thereto, which is provided at each end with bearings *b′ b′*. A shaft b^2 passes through said bearings and through bearings formed at one end of a bracket-casting b^3, forming a hinge connection. This shaft is provided at its lower end with a bevel gear b^4, which receives motion from a bevel-gear b^5 on a shaft connected with one of the driving-wheels of the machine, and the other end of said shaft b^2 is provided with a bevel-gear b^6. The other extremity of the bracket-casting b^3 is provided with bearings to receive a shaft *c*, and said casting is of such form that shafts *c* and b^2 will preferably be perpendicular to each other. The shaft *c* also passes through bearings *c′*, secured to the picker-platform B, thus forming a hinge connection perpendicular to the hinge connection formed by the bracket and the side A′ of the main body. One end of shaft *c* is provided with a bevel-gear c^2, engaging gear b^6 on shaft b^2, and its other extremity carries the gear c^3.

Upon the picker-platform are mounted the shafts *d d′* and *e e′*, which carry the endless aprons or carriers D and E, respectively. These shafts are mounted in bearings in the platform B, and their upper ends are supported by bearings in brackets attached to the platform on each side of the same, as shown in Fig. 3, or in any other manner desired.

Above the platform B is a supplemental platform B′, and between the two sprocket-wheels d^2 d^3 and e^2 e^3 are mounted rigidly on shafts *d d′* and *e e′*, respectively, and chains connect said sprockets d^2 d^3 and e^2 e^3 for imparting positive motion to the shafts *d′ e′*, which carry the rotary cutters F and G, mounted thereon above the platform B′. The shafts *d* and *e* are coupled together by means of sprocket wheels and chains, and the lower extremity of the shaft *d* is provided with a bevel-gear d^4, which engages the gear c^3 and transmits the motion imparted to shaft *c* to the devices on the picker-platform. The end-

less aprons D and E may pass around shafts *d d'* and *e e'*, or I may provide a separate shaft for one or both aprons in advance of shafts *d' e'*, if desired. The apron D preferably extends to the rear farther than apron E, so that the stalks, when they have been carried up to the highest point, will be forced by the elasticity of the branches to fall toward the body of the machine. The rotary cutters F and G revolve toward each other and sever the stalks near the ground. The cutter F is provided with suitable blades and the cutter G with curved fingers which gather the stalks and force them against the blades of the part E. The picker-platform is preferably forked at its front end and extends forward in two narrow tapering portions *c c*, between which is a space gradually decreasing toward the cutters, and this construction serves to insure the stalks being brought directly to the cutters and severed by them. The forward end of the picker-platform is very close to the ground when the machine is in operation, and said platform is connected by means of chains or other constructions with levers mounted upon the machine-body adjacent to the driver's seat, whereby the position of the platform can be controlled by the operator, and the platform raised or lowered or moved laterally to insure the proper cutting of the stalks, these motions being allowed by the universal-joint connection before described without interfering with the proper operation of the parts.

In the drawings I have shown the main frame or platform as provided with an arched frame X, having rollers mounted thereon to receive a chain *x*, attached at one end to the picker-platform and at the other to a drum Y, mounted upon the main frame and provided with a suitable actuating-lever.

The lateral adjustment of the picker-platform is controlled by any preferred mechanism. I have shown said platform provided with a slotted link Z, which may be secured and the platform held in the desired position by means of the nut *z* or other construction.

In the drawings I have shown the picker-platform adjusted to its innermost position; but it may be adjusted outwardly to any desired extent. The platform being inclined, the upper portion of the carrier-aprons D and E will be slightly in advance of the cutters, and said aprons are adjusted to run so close together as to grasp the stalks between them before they reach the cutters and hold them while being severed.

When the machine is out of operation, the picker-platform may be raised into a horizontal or substantially horizontal position, and be maintained in any suitable manner.

Within the main body of the machine, preferably near the forward end and on the same side as the picker-platform, is mounted the wheel H, which is of considerable size and provided with a broad face. The side wall A' of the body is cut away near the picker-platform. Adjacent to the bottom of this cut-away portion is mounted a shaft I, which is journaled in the sides of the machine and provided with a broad-faced pulley *i*. A similar shaft K is mounted above shaft I, near the top of the machine, and provided with a pulley *k*, similar to pulley *i*. At the rear end of the machine is mounted another shaft J, carrying three or more pulleys *j j j*, arranged side by side, and a similar shaft L is mounted at the rear of the wheel H and adjacent to the periphery thereof and provided with three or more pulleys *l l l*. Two or more endless chains, cords, or belts, as preferred, (three chains being shown,) pass over the wheel H, under the pulleys *l l l*, over pulleys *j j j*, thence toward the front of the machine over pulley *k*, around pulley *i*, and thence to the wheel H, forming a continuous operative connection. These chains will be drawn taut, and I may provide the shafts of one or more pulleys with adjustable bearings for tightening said chains, if I desire. When motion is applied to the wheel H, it will revolve and impart motion to the chains. The series of pulleys *j j j* and *l l l* will allow for any variation in the lengths of the different chains or belts. Motion is imparted to the wheel H, the gripping-chain and pulleys being engaged by said chain from the driving-shaft of the machine. To this end a chain or belt passes around a sprocket-wheel on said shaft and a sprocket-wheel on an idle-shaft, said idle-shaft being similarly geared with the shaft of wheel H by means of sprocket-wheels and chain. The belts or chains will be crossed when necessary to give the wheel H the motion in the proper direction, and the sprocket-wheels will be of such relative sizes as to insure the wheel H being rotated at the proper degree of speed.

At intervals around the upper portion of the wheel H are mounted a number of rotary devices for acting upon the cotton-stalks to remove the cotton therefrom, which I term "cotton-stripping devices." Of these devices M M' are two rollers, mounted in suitable bearings and located one above and the other below the periphery of wheel H. N N' are two brushes similarly arranged with respect to wheel H. O is a roller journaled above wheel H, the periphery of which is provided with grooves having a very slight pitch. O' O^2 are two rollers, located the one above the other below the periphery of wheel H and having grooves of a greater pitch than roller O. These three rollers are located in close proximity to each other. P P' are a pair of rotary brushes similar to N N'.

At a point adjacent to the forward edge of wheel H are located beaters Q Q, preferably consisting of springs provided with projections adapted to be engaged by tappets on a tappet-shaft R', which is located in proper position to have its tappets engage the same,

and journaled in the sides of the machine. These beaters may be of any preferred form, and I may employ as many as I may find most effective. In the drawings I have shown two; but there may be a larger or smaller number of them, if desired.

The tappet-shaft and the devices just described are operated in any preferred way. I have shown a chain passing over a sprocket-wheel or a counter-shaft X′, journaled in the sides of the machine, and sprocket-wheels on certain shafts for imparting motion thereto, said shafts being also provided with pinions gearing with their complementary shafts for imparting the desired motion in the proper direction; but they may be geared in any other manner.

In order to afford bearings for the shafts located beneath the periphery of the wheel H, I may provide the plate H′, if desired, which is so formed as to conform in shape to the upper part of the wheel H and be of slightly less diameter. This plate may be suitably attached to the bottom of the machine and will provide bearings for the above-mentioned shafts.

Beneath the beaters Q Q and the cotton-stripping devices is an endless carrier-apron R, upon which falls the cotton after it has been removed from the stalks, and which carries the said cotton up and delivers it to the cotton-separating devices. Of these devices, S S′ are two rollers, preferably provided with spiral grooves. T is an endless slatted carrier, which is mounted at an angle to the bottom of the machine and has a movement transversely of the same. This carrier may consist of endless belts joined by slats or strips, or it may be of other construction, so as to form a series of slats. Just above the lower edge of this slatted carrier is mounted a roller T′, having its exterior provided with card-clothing, and above said card-roller are journaled the rollers *s*, *s′*, and s^2. *s* is a roller provided at intervals with short pieces of chain or wire and adapted to beat upon any material carried by the card-roller. The cotton will be engaged and held by the card-clothing, while the chains of the shaft *s* will beat back all pieces of branches and like foreign material. *s′* is a roller provided with spiked teeth upon its periphery, which are so arranged as to force back all foreign matter which has passed the roller *s*, but which allows the cotton on the card-cylinder to be carried past it. S^2 is a brush which brushes all the cotton off of the card-roller and deposits it upon an endless carrier T^2, which is suitably mounted beneath the same. The aprons R and T^2 and the separating devices may be actuated in any desired way. I have shown a chain passing over sprocket-wheels on shafts of roller T′ and apron T^2, and rollers *s′* *s′* s^2 driven by a chain from another sprocket-wheel on the shaft of roller T′, the apron R, rollers S and *s* being given their proper directions of rotation by pinions gearing with pinions on adjacent shafts. The slatted apron T may be driven by means of beveled gearing from a counter-shaft actuated from the driving-wheel.

I provide an endless apron L′ for conveying the stalks after they have been stripped of cotton to the rear end of the machine, where they are discharged, and this apron may be driven by a chain or belt from the shaft J or L, as desired, as shown in Fig. 5. The forward part of the machine is provided adjacent to the opening in the wall A′, before referred to, with a curved inclined guiding-plate I′ for guiding the stalks into a position where they can be acted upon by the gripping-chains.

In order to facilitate the action of the gripping-chains and to deliver the stalks to them, I may provide a series of endless belts K′, having projections thereon passing over the pulleys I and K between the chains, and these belts will assist in placing the stalks in position to be gripped between the chains and the periphery of the wheel H.

The operation is as follows: The machine is drawn along with the picker-platform in line with a row of cotton plants. As the machine advances the stalks will be grasped by the endless aprons D E and severed by the revolving cutters F G. The stalks are then carried upward by the carriers D E, and will fall over through the cut-away portion of the side A′ upon the inclined guide I′, and will be taken up by the endless belts K′ and carried between the gripping-chains and the periphery of the wheel H, where they will be firmly gripped. At the same time the revolution of the tappet-shaft R′ will cause the beaters Q Q to strike the branches and knock from them all the ripe loose cotton. The stalks will then be drawn by the gripping-chains and wheel H between the rollers M M′, which crush and open the dried bolls and press and flatten the branches. They next pass between the rotary brushes N N′, which remove all the cotton and bolls which have been loosened by the rolls M M′ from the branches. The stalks pass next through the spirally-grooved rollers O, O′, and O^2, and the remaining green bolls are crushed and loosened from the branches. They pass next to the brushes P P′, where the remaining cotton and bolls will be brushed off, and the stalks, entirely stripped of cotton, will fall from the gripping-chains upon the apron L′ and be discharged from the machine. The cotton stripped or otherwise detached from the stalks by the devices just described falls upon the apron R′, together with any foreign materials which may have been detached, such as leaves, sticks, dirt, and fragments of crushed bolls. The apron R′ conducts this mass as it falls upon it to the rolls S S′, where the bolls are thoroughly crushed and opened, from whence it falls upon the slatted apron T. As this apron

moves along, the cotton proper will fall to the lower edge and will be caught up by the card-roller T′, while the dirt, sticks, &c., will drop through the slats of the apron, from whence they may be removed in any desired way. If, however, any foreign matter should adhere to the cotton upon the card-roller, it will be beaten back by the chains on roller *s* or the spikes on roller *s′*, and such foreign matter as does not fall through the slats of the apron T will be carried to the side of the machine, and may be discharged upon the bottom of the machine or through an opening therein upon the ground. The roller s^2 will strip the cotton from the card-roll and deposit it upon the carrier-apron T^2, which will carry it to a suitable receptacle or deposit it in some convenient portion of the main body of the machine, as desired.

I do not wish to be limited to the exact constructions herein shown and described, as other equivalent devices might be employed and changes made therein without departing from the spirit of my invention.

What I claim, and desire to secure by Letters Patent, is—

1. In a cotton-harvester, the combination, with the picker-platform, of endless belts mounted thereon, adapted to seize the cotton-plants and carry them to the rear of the picker-platform, of gripping devices extending from the rear of the picker-platform to the rear of the machine, adapted to seize the plants delivered by the belts of the picker-platform and convey them through cotton-cleaning devices to the rear of the machine, substantially as described.

2. In a cotton-harvester, the combination of endless belts or chains and a wheel the periphery of which is engaged by said endless bolts or chains, adapted to grip the cotton-stalks between said wheel and chains and carry the same through cotton-cleaning devices in the arc of the periphery of the wheel, substantially as described.

3. In a cotton-harvester, the combination, with endless belts or chains and a wheel a considerable portion of the periphery of which is engaged by said endless belts or chains, adapted to grip the cotton-stalks between said wheel and chains, of endless chains engaging the periphery of said wheel tangentially between said gripping-chains and provided with projections adapted to deliver the stalks between said wheel and chains, substantially as described.

4. In a cotton-harvester, the combination, with endless belts or chains and a wheel the periphery of which is engaged by said endless belts or chains, of cotton-stripping devices arranged at one side of said wheel and chains and in close proximity to the periphery thereof, substantially as described.

5. In a cotton-harvester, the combination, with endless belts or chains and a wheel the periphery of which is engaged by one of said belts between the supports for the same, of cotton-stripping devices arranged at one side of said wheel in close proximity thereto and in an arc corresponding to the periphery of the wheel, said cotton-stripping devices being constructed at one end for the admission of material between them, substantially as described.

6. The combination, with the main body of the harvester, of a picker-platform connected therewith provided with endless gripping-aprons for gripping the cotton-plants between them and carrying them, the outer apron extending in rear of the other, a trough in the main body of the harvester opposite the extended portion of the outer apron, and gripping and carrying devices for taking the plants from said trough and carrying them rearwardly of the machine, substantially as described.

7. In a cotton-harvester, the combination, with the main body of the same, of a picker-platform provided with endless belts for seizing and carrying the cotton-plants, a trough in the main body adapted to receive the cotton-plants from the picker-platform, a wheel located just in rear of said trough, endless chains extending into said trough and engaging a considerable portion of said wheel, and an endless belt or apron extending from the rear of said wheel to the rear of the main body, substantially as described.

8. In a cotton-harvester, the combination, with the gripping and carrying devices for the plants, of spring-beaters located adjacent to the travel of said plants, and a tappet-shaft for operating said beaters, substantially as described.

9. In a cotton-harvester, the cotton-cleaning devices consisting of crushing-rolls, an inclined table located beneath the same, a card-cylinder adapted to receive cotton from said table, beaters, and a stripping-roller for said card-cylinder, said table being slatted to allow refuse material to pass through the same, substantially as described.

10. In a cotton-harvester, the cotton-cleaning devices consisting of the crushing-rolls, an inclined endless apron beneath the same and moving longitudinally thereof, a card-cylinder adjacent to the lower edge of said apron, beaters, and a stripping-roller for said card-cylinder, said apron being slatted, substantially as described.

11. In a cotton-harvester, the cotton-cleaning devices consisting of crushing-rolls, an inclined slatted endless apron adapted to move longitudinally of said rolls and located beneath the same, a card-cylinder located adjacent to the lower edge of said apron adapted to receive cotton therefrom, beaters, and a stripping-roller for said card-cylinder, whereby refuse material not passing through said apron will be discharged from the machine by the same, substantially as described.

12. In a cotton-harvester, the cotton-strip-

ping devices consisting of plain crushing-rolls and grooved crushing-rolls, brushes in rear of the plain crushing-rolls and brushes in the rear of the grooved crushing-rolls, one each or more of each of said devices being on opposite sides of the travel of the cotton-plants within the machine, said parts being constructed at one end for the admission of material between them, and plant-carrying devices adjacent to such end, substantially as described.

In testimony whereof I affix my signature in presence of two witnesses.

EDWARD LARRABEE BAKER.

Witnesses:
RICHARD EMERSON,
C. C. HALL.