Nov. 11, 1930. E. G. CARLSON 1,781,101

EXTENSION DEVICE

Filed Jan. 21, 1930

Fig. 1.

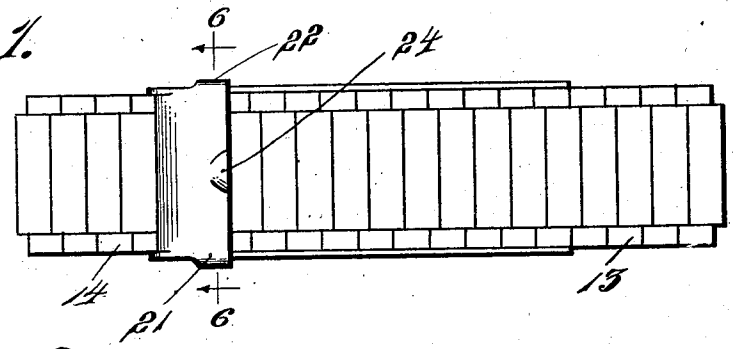

Fig. 2.



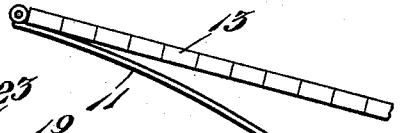

Fig. 3.

Fig. 4.

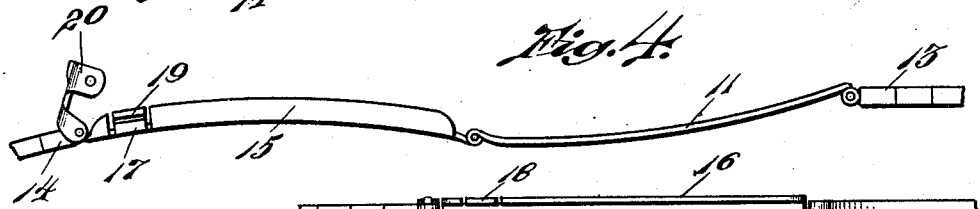

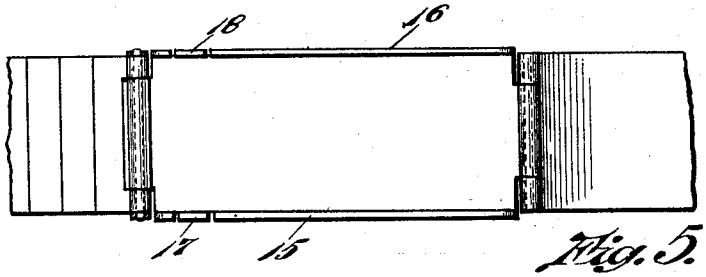

Fig. 5.

Fig. 6.



Fig. 7.

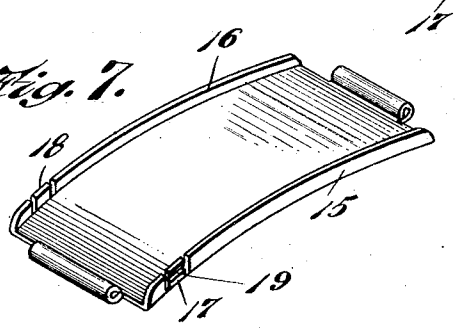

Fig. 8.

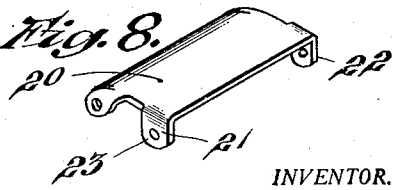

INVENTOR.
Edwin G. Carlson
BY Barlow & Barlow
ATTORNEYS.

Patented Nov. 11, 1930 1,781,101

UNITED STATES PATENT OFFICE

EDWIN G. CARLSON, OF RIVERSIDE, RHODE ISLAND, ASSIGNOR TO SPEIDEL CHAIN CO., OF PROVIDENCE, RHODE ISLAND, A FIRM COMPOSED OF FREDERIC SPEIDEL AND EUGEN SPEIDEL

EXTENSION DEVICE

Application filed January 21, 1930. Serial No. 422,320.

My present invention relates to bracelet extension devices, and has particular reference to bracelet extension devices suitable for use with watch strap chains formed of link sections hingedly connected together.

One object of the invention is to provide an extension device which will not appreciably effect the appearance of continuity of the watch strap.

Another object is to provide an extremely thin extension device which does not add appreciable thickness to the bracelet when in folded position.

A further object is to provide a bracelet extension device which is less noticeable when folded than similar devices of this nature.

With these and other objects and advantageous features in view, my invention consists in a novel arrangement of parts more fully disclosed in the detailed description following, in conjunction with the accompanying drawings, and more particularly set forth in the appended claims.

In the drawings:

Fig. 1 is a top plan view of a bracelet equipped with my improved extension device, the extension device being in folded position;

Fig. 2 is a side elevation thereof;

Fig. 3 is a view similar to Figure 2, the extension device being partially unfolded;

Fig. 4 is a view similar to Figure 3, the extension device being completely unfolded;

Fig. 5 is a bottom plan view of the extension device in folded position;

Fig. 6 is a section on the line 6—6 of Figure 1; and

Figs. 7 and 8 are respectively perspective views of the base of the extension device and of the catch member.

It has been found desirable to provide an inconspicuous extension device which does not noticeably effect the appearance of the bracelet when worn. I have devised an extension device which includes a base section of channel shape, and another section hingedly secured to the base section at one end and nesting therein when in folded position, the bracelet strap being hingedly secured to the free ends of the sections; and I have pivotally mounted a catch member on the strap end of the base section to extend over the end section and its associated strap and engage the base section to releasably lock the extension device in folded position; and the following is a detailed description of one constructional form of extension device embodying the principles of my invention.

Referring to the drawings, the extension device includes a base section 10 and an end section 11 hingedly secured together as at 12, the strap ends 13 and 14 being pivotally secured to the free ends of the two sections.

The base section 10 is channel shape in cross-section, the two walls, 15, 16, receiving the end section 11 and the strap end 13 when the extension device is in folded position. Each wall has a resilient finger, respectively designated 17 and 18, formed therein, preferably by cutting vertical slots in the walls, the resilient fingers 17 and 18 each having snap grooves 19 therein for a purpose hereinafter described.

Pivotally mounted on the strap end of the base section 10 is a catch 20, which may be, and preferably is, hinged directly on the hinge pin connecting the strap end 14 and the base section 10. The catch 20 is of small width, and has two depending ears 21, 22 adapted to fold over the edge portions of the strap end 13 and the end section 11 when nested within the base section 10 and to embrace the resilient fingers 17 and 18 on the exterior thereof, each ear having a projection 23 therein for releasably locking with the groove 19 of the corresponding resilient finger. The catch 20 is also provided with a finger lip 24 for manual lifting when unfolding the extension device.

The operation of my improved extension device may now be explained. The bracelet being in unfolded position, as shown in Figure 4, the end section 11 is swung until it nests within the base section 15, the strap end 13 pivoting on its connection with the end section to also nest within the walls of the base section. The catch 20 is now moved downwardly to embrace and cover the adjacent ends of the strap end 13 and end section 11, the ears 21, 22 passing over and engaging the resilient fingers 17 and 18 until the projec-

tions 23 snap into the grooves 19, thus releasably locking the extension device in folded position.

My improved extension device therefore preserves the continuity of appearance of the bracelet, since the catch may be of similar form to and of similar ornamentation to the link sections themselves, when used with a link section bracelet, or may be suitably ornamented to match with the designs of other types of bracelets. The catch is small and inconspicuous, and the nesting of the end section and the contiguous strap end within the base section permits a reduction in thickness of the extension device and thus increases the attractiveness of the bracelet.

While I have described a specific construction of the novel extension device, it is obvious that the form and the arrangement of the various elements thereof may be changed to suit the requirements of different bracelet designs without departing from the spirit and the scope of the invention as defined in the appended claims.

I claim:

1. In a bracelet extension device, end members hingedly connected together to permit nesting, strap securing means at the free ends of said end members, one end member having a resilient latch, and a cover less than one-half the length of said members pivotally mounted on said same end member extending over the free end of the other member when nested and releasably engageable with said latch to secure the members in nested relation.

2. In a bracelet extension device, end members hingedly connected together to permit nesting, strap securing means at the free ends of said end members, one end member having a resilient latch, and a movable catch mounted on the strap securing means of said same end member extending over the free end of the other member when nested and releasably engageable with said latch to secure the members in nested relation.

3. In a bracelet extension device, end members hingedly connected together to permit nesting, strap securing means at the free ends of said end members, one end member being channel shaped and having a resilient latch in a channel wall thereof, and a cover less than one-half the length of said members on said same end member extending over the free end of the other member when nested and having a catch to releasably engage with said latch to secure the members in nested relation.

4. In a bracelet extension device, end members hingedly connected together to permit nesting, strap securing means at the free ends of said end members, one end member having a resilient latch in each channel wall thereof, and a cover less than one-half the length of said members pivotally mounted on said same end member extending over the free end of the other member when nested and releasably engageable with said latches to secure the members in nested relation.

5. In a bracelet extension device, end members hingedly connected together to permit nesting, strap securing means at the free ends of said end members, one end member being channel shaped and having a resilient latch in each channel wall thereof, and a catch mounted on the strap securing means of said same end member extending over the free end of the other member when nested and releasably engageable with said latches to secure the members in nested relation.

6. In a bracelet extension device, end members hingedly connected together to permit nesting, one of said end members being channel shaped, strap securing means at the free ends of said end members, said channel shaped member having resilient latch fingers in the channel walls thereof, a manually operable finger piece pivotally mounted on the strap securing means of said channel shaped member and extending over the end thereof, and catches on said finger piece releasably engageable with said latch fingers.

7. In a bracelet extension device, two end members hingedly connected together to permit nesting, one of said end members being channel shaped, strap securing means at the free ends of said end members, said channel shaped member having resilient latch fingers in the channel walls thereof, a manually operable finger piece pivotally mounted on the strap securing means of said channel shaped member and extending over the free end of the other member when nested, and catch elements on said finger piece releasably engageable with said latch fingers.

In testimony whereof I affix my signature.

EDWIN G. CARLSON.