March 31, 1942. J. W. WILKINSON 2,277,738

MOUNTING DEVICE FOR OIL FILTERS

Filed Aug. 4, 1939 2 Sheets-Sheet 1

Fig. 1.

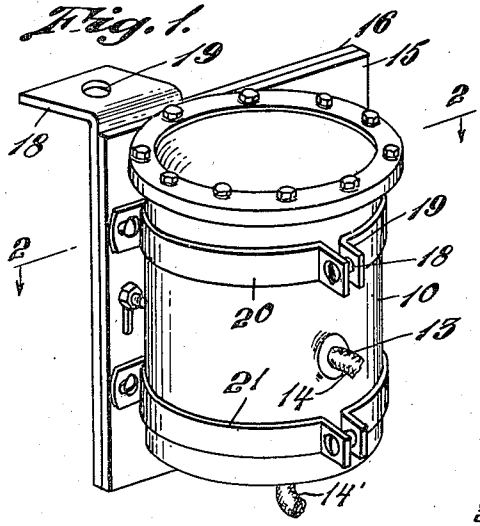

Fig. 2.

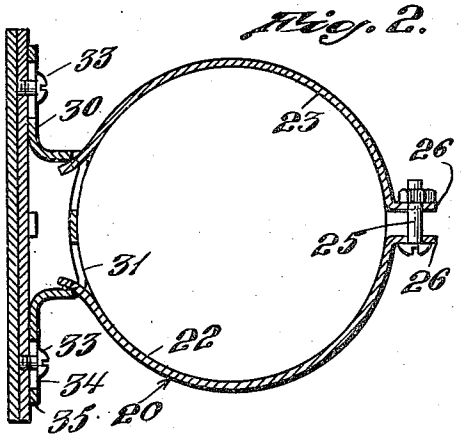

Fig. 3.

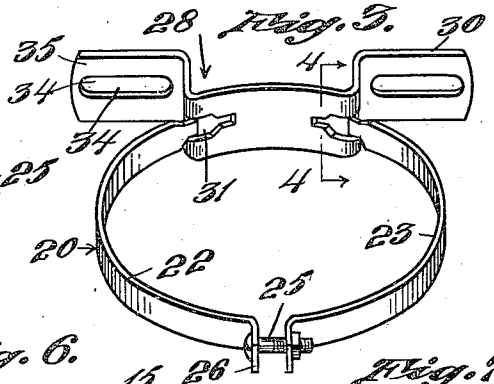

Fig. 4.

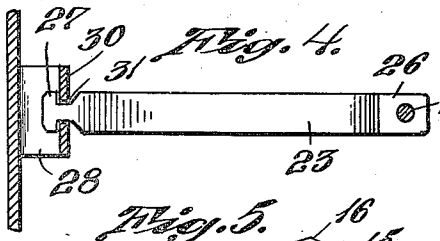

Fig. 5.

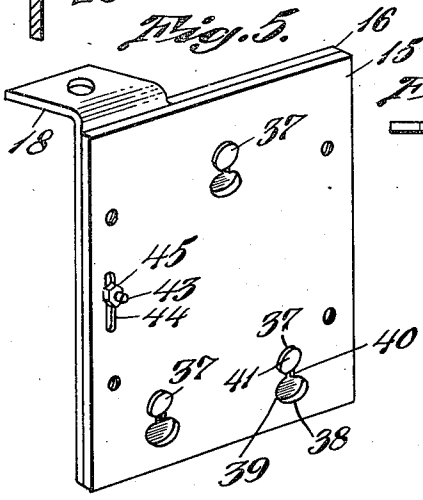

Fig. 6.

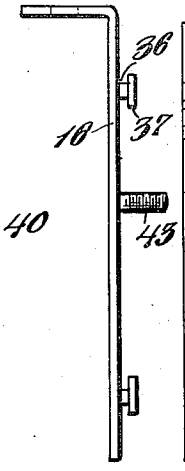

Fig. 7.

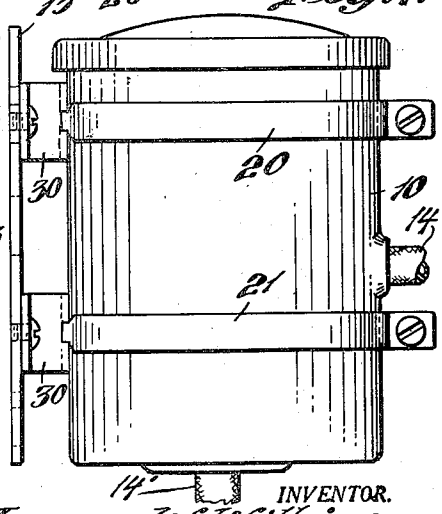

INVENTOR.
James W. Wilkinson
BY Barlow & Barlow
ATTORNEYS.

March 31, 1942. J. W. WILKINSON 2,277,738

MOUNTING DEVICE FOR OIL FILTERS

Filed Aug. 4, 1939 2 Sheets-Sheet 2

Fig. 8.

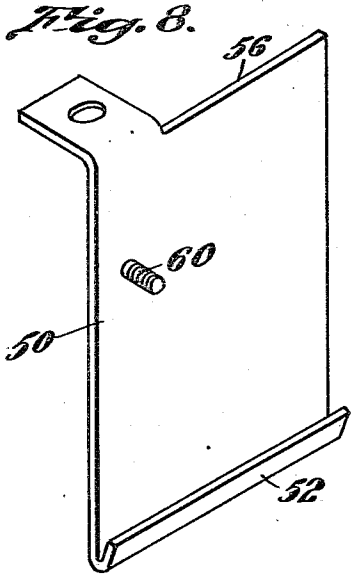

Fig. 9.

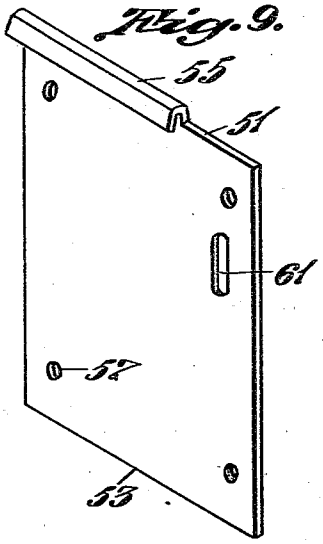

Fig. 10.

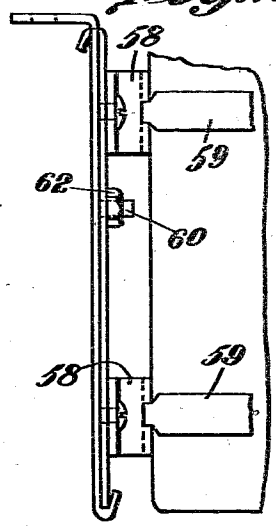

Fig. 11.

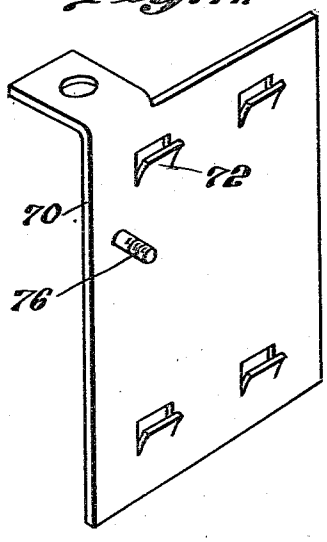

Fig. 12.

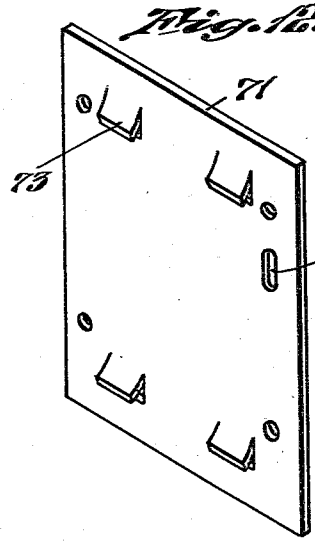

Fig. 13.

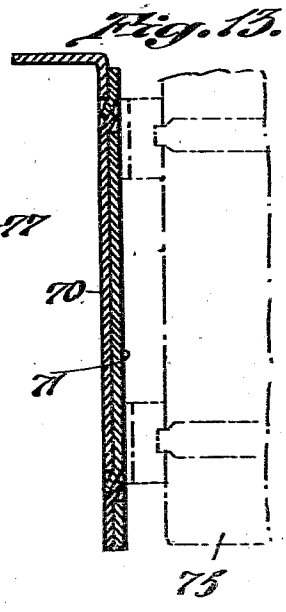

INVENTOR.
James W. Wilkinson
BY
Barlow & Barlow
ATTORNEYS.

Patented Mar. 31, 1942

2,277,738

UNITED STATES PATENT OFFICE

2,277,738

MOUNTING DEVICE FOR OIL FILTERS

James W. Wilkinson, Providence, R. I., assignor to Fram Corporation, a corporation of Rhode Island

Application August 4, 1939, Serial No. 288,375

2 Claims. (Cl. 210—62)

This invention relates to oil filters, and in particular to oil filters of the type used in continuous, pressure-lubricating systems of internal combustion engines; and has for one of its objects the mounting of an oil filter of the above class in such a manner that it is capable of being conveniently moved bodily into a position different from its normal operating position for facilitating either the insertion or the withdrawal of the filter cartridge unit from the casing when the filter is installed in a restricted location which renders such removal of the filter cartridge impossible.

Another object of the invention is to provide a two part filter mounting which may be quickly separated and connected whereby movement of the entire filter assembly bodily into a position well removed from its normal operating position for effecting replacement or inspection of the filter cartridge by separation of the mounting device may be accomplished but without the necessity for disconnecting the piping or conduits connecting the filter to the fluid system of the internal combustion engine.

Another object of the invention is the provision of a detachable filter mounting device of the above character in which the entire weight of the filter assembly will be borne by interengaging means carried by the separable and independent parts of the mounting device wherein the auxiliary securing means for maintaining the separate and independent parts of the mounting device secured together will be entirely free of any applied pressure incident to the weight of the filter.

Another object of the invention is the provision of a two-part mounting, and coupling means which are permanently carried by the mounting for positively securing the parts of the mounting into abutting relationship and cannot be accidentally removed and lost.

With these and other objects in view, the invention consists of certain novel features of construction, as will be more fully described, and particularly pointed out in the appended claims.

In the accompanying drawings:

Fig. 1 is a perspective view showing an oil filter attached to a mounting device embodying my invention;

Fig. 2 is a transverse sectional view on enlarged scale, taken on the line 2—2 of Fig. 1;

Fig. 3 is a perspective view of one of the clamping devices for attaching the filter to my mounting;

Fig. 4 is a section taken on the line 4—4 of Fig. 3;

Fig. 5 is a perspective view of the embodiment of my mounting device shown in Fig. 1 without the filter and showing the manner of attachment of the two parts of the mounting device;

Fig. 6 is a side elevational view of the rear member of my mounting device shown in Fig. 1;

Fig. 7 is a side elevational view of the front member of my mounting device shown in Fig. 1 with the filter in place thereon;

Fig. 8 is a perspective view of the rear plate of a modified form of mounting device showing the bottom lip for coupling to and supporting the front plate of the mounting;

Fig. 9 is a perspective view of the front plate member to be employed with the rear plate shown in Fig. 8;

Fig. 10 is a side elevational view showing in assembled position the plate members represented in Figs. 8 and 9, and with a fragmental portion of the filter casing being shown in its mounted position for proper operation;

Fig. 11 is a perspective view of the rear plate member of another modified form of mounting device showing the lugs for coupling to and supporting the front plate member of the mounting;

Fig. 12 is a perspective view of the front plate member to be employed with the rear plate shown in Fig. 11; and

Fig. 13 is a longitudinal sectional view showing in assembled position the plate members represented in Figs. 11 and 12, and with a fragmental portion of the filter casing being shown in its mounted position for proper operation.

The ordinary filter mountings hitherto used for installing the large size oil filters of the type required in the lubricating circulating systems of the internal combustion engines of trucks, busses and tractors, do not meet all requirements met with in the field, as it is often necessary, especially in motor truck or bus designs of the "cab over engine" type, to install and operate such oil filters in locations where there is practically no overhead clearance or space between the top of the filter and the adjacent parts of the engine chassis or body of the vehicle, in which instance, there is no room to permit the withdrawal of the entire filter cartridge unit for inspection and/or replacement when a filter is mounted in such confined locations; and in order to overcome such difficulties I have provided a mounting device for supporting and sustaining the filter unit in proper operating position

during its normal operation and use but also capable of separation and movement into a different position at a different level in order to present the top of the filter casing in a more accessible position to facilitate the easy removal and insertion of the filter cartridge unit for inspection and/or replacement when the filter becomes clogged or whenever desired; and this mounting device comprises two separate and independent members having interengaging means for connecting the members together when the parts are positioned face to face in abutting relation; and the following is a more detailed description of the present embodiment of this invention, illustrating the preferred means by which these advantageous results may be accomplished:

With reference to the drawings 10 designates in Figs. 1 and 7 the casing of an oil filter of this class which is of generally cylindrical shape and mounted in an upright position upon a mounting device embodying the present invention. The casing 10 is provided with the usual cover 12, filtering element (not shown) and inlet opening 13 and outlet opening (not shown) to which flexible conduits are attached as indicated by the reference characters 14 and 14', for connecting the filter into the lubricating system of an internal combustion engine. The mounting device consists of a front plate member 15 and a rear plate member 16 of approximately the same size and shape made of iron or steel, or some other suitable metal. The rear plate member 16 has at its upper edge a rearwardly extending flange 18 which being formed with a hole 19 of suitable size for the reception of a bolt provides for mounting the plate 16 upon a fixed support, such as the block of an internal combustion engine or some part of the frame or the transmission casing of a motor vehicle. The filter casing 10 is detachably mounted upon the front plate member 15 by means of a pair of clamps 20 and 21, each of which consist of a plurality of arcuate straps or bands 22 and 23 respectively (see Fig. 3) the curvature of which conforms substantially to the exterior curvature of the casing and to embrace the same. The straps 22 and 23 are held in tightly clamped engagement with the sides of the casing by bolts 25 which pass through suitable holes in the flanges 26 formed on the free forwardly extending ends of the straps 22 and 23 respectively. The straps 22 and 23 are of identical construction, and they are pivotally mounted at their rearwardly extending ends by means of lugs 27 struck out of the stock of such ends of the straps, as shown in Fig. 4. The lugs 27 of each set of straps 22 and 23 are each disposed within a U-shaped channel 28 of bracket 30 by sidewise insertion through the elongated slots 31 formed in the corners of the channel 28.

Bolts 33 passing through suitable slots 34 in the straight flanges 35 of the bracket 30 serve to hold the bracket fixed to the front plate 15. In order to couple the plate members 12 and 16 together so as to provide a rigid mounting for the filter during its normal operation I have provided on the front face of the rear plate member 16 a plurality of projecting studs 36 each having an enlarged head 37 and adapted to be inserted into and project through the recesses 38 formed in the front plate member 15. The recesses 38 as shown in Fig. 5 resembles the figure 8 in which one loop 39 of the recess is of a size large enough to permit the free passage of the head 37 of the stud 36 the shank of which after being slid through a slot 40 connecting the larger loop 39 with the smaller loop 41 brings the head 37 of the stud into overlying relation with the edges of the smaller loop 41 which serve as abutments to prevent passage of the head 37 of the stud through the opening of the loop 41 when the plates 15 and 16 are in registry and in abutting relation for holding the filter in its proper operating position during use.

A suitable locking device may be employed for maintaining the plates 15 and 16 in their abutting relation, such as, for example, a bolt 43 one end of which is integrally secured to the rear plate member 16 with the other end of the bolt projecting through an elongated slot 44 in the front plate 15, the free projecting end of the bolt being in an easily accessible position for ready tightening or loosening of a nut 45 carried on such projecting end portion of the bolt and serving to clamp the plates 12 and 13 together.

In Figs. 8 to 10 inclusive, I have illustrated a modified form of the invention comprising a pair of separate and independent plates 50 and 51, the rear plate 50 being formed with an upwardly inclined transversely extending lip 52 at the lower edge of the plate for engagement with the lower edge 53 of the front plate 51 when the latter is placed face to face in abutting engagement with the plate 50 as shown in Fig. 10. A lip 55 extending upwardly, rearwardly and thence downwardly from the top edge of the front plate 51 and partially across the same is provided for engaging the top edges 56 of the rear plate 50 when the plates 50 and 51 are in their assembled and abutting relation. The front plate 51 is also provided with a plurality of internally screw-threaded holes 57 for detachably mounting the brackets 58 and which pivotally carry the separable clamping straps or bands 59 for positively engaging and securing the casing to the front plate 51. A bolt 60 fixed to the plate 50 and projecting through a slot 61 in the front plate 51 carries a nut 62 for securing the plates 50 and 51 in assembled position as shown in Fig. 10.

In Figs. 11, 12, and 13 there is shown another modified form of the invention in which the plates 70 and 71 are each provided with a plurality of lugs 72 and 73 respectively which are struck out of the stock of the respective plates and have interfitting engagement one with the other when the plates 70 and 71 are placed face to face in inverted position and into an abutting relationship, as shown in Fig. 13 for supporting a filter casing, 75.

A bolt 76 integrally secured to the plate 70 passes through an elongated slot 77 formed in the plate 71, and the projecting end of the bolt carries a suitable nut (not shown) for securing the plates 70 and 71 in their assembled relationship in which position the entire weight of the filter assembly is carried solely by the lugs 72 and 73 and is not imposed upon the stud 76 which acts solely as a locking device for maintaining the plates 70 and 71 in proper assembly.

The foregoing description is directed solely towards the construction illustrated, but I desire it to be understood that I reserve the privilege of resorting to all the mechanical changes to which the device is susceptible, the invention being defined and limited only by the terms of the appended claims.

I claim:

1. In a mounting for a filter of the type permanently connected to the lubricating system and in the working position of which a cartridge

is obstructed from removal, the combination of a support for sustaining the filter, a filter casing having inlet and outlet openings and a removable cover, a replaceable cartridge between the inlet and outlet openings, flexible conduits connecting said inlet and outlet openings to said lubricating system, a device for sustaining the filter in desired position, said device comprising two separate parts, means to mount one part permanently on said support and means for mounting the other part permanently on said filter casing, said parts being provided with detachable interengaging portions for releasable connection to lock the parts together for mounting the filter in working position whereby the parts may be detached and the casing bodily moved to a different position without detachment of the flexible conduits for access to the cover in removing the same and cartridge within.

2. In a mounting for a filter of the type permanently connected to the lubricating system and in the working position of which a cartridge is obstructed from removal, the combination of a support for sustaining the filter, a filter casing having inlet and outlet openings and a removable cover, a replaceable cartridge between the inlet and outlet openings, flexible conduits connecting said inlet and outlet openings to said lubricating system, a device for sustaining the filter in desired position, said device comprising two separate parts, means to mount one part permanently on said support and means for mounting the other part permanently on said filter casing, one of said parts being provided with recesses and the other part being provided with projections to interlock therewith for mounting the filter in working position.

JAMES W. WILKINSON.