Dec. 4, 1951 I. L. STEPHENSON 2,577,488

GRAIN SEPARATING DRUM

Filed Nov. 24, 1947 6 Sheets-Sheet 1

FIG. 1.

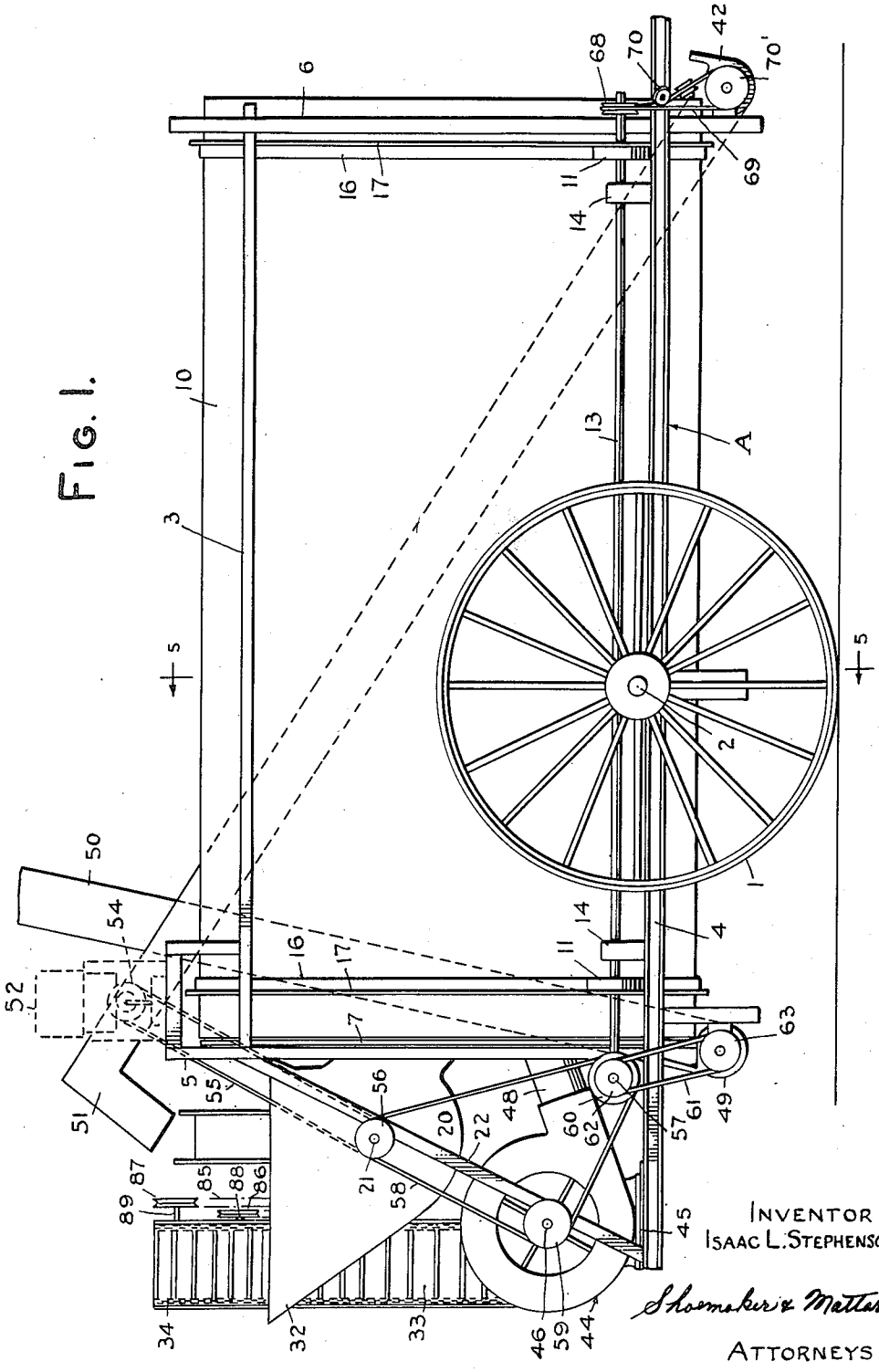

INVENTOR
ISAAC L. STEPHENSON

Shoemaker & Mattare

ATTORNEYS

Dec. 4, 1951 I. L. STEPHENSON 2,577,488

GRAIN SEPARATING DRUM

Filed Nov. 24, 1947 6 Sheets-Sheet 2

FIG. 2.

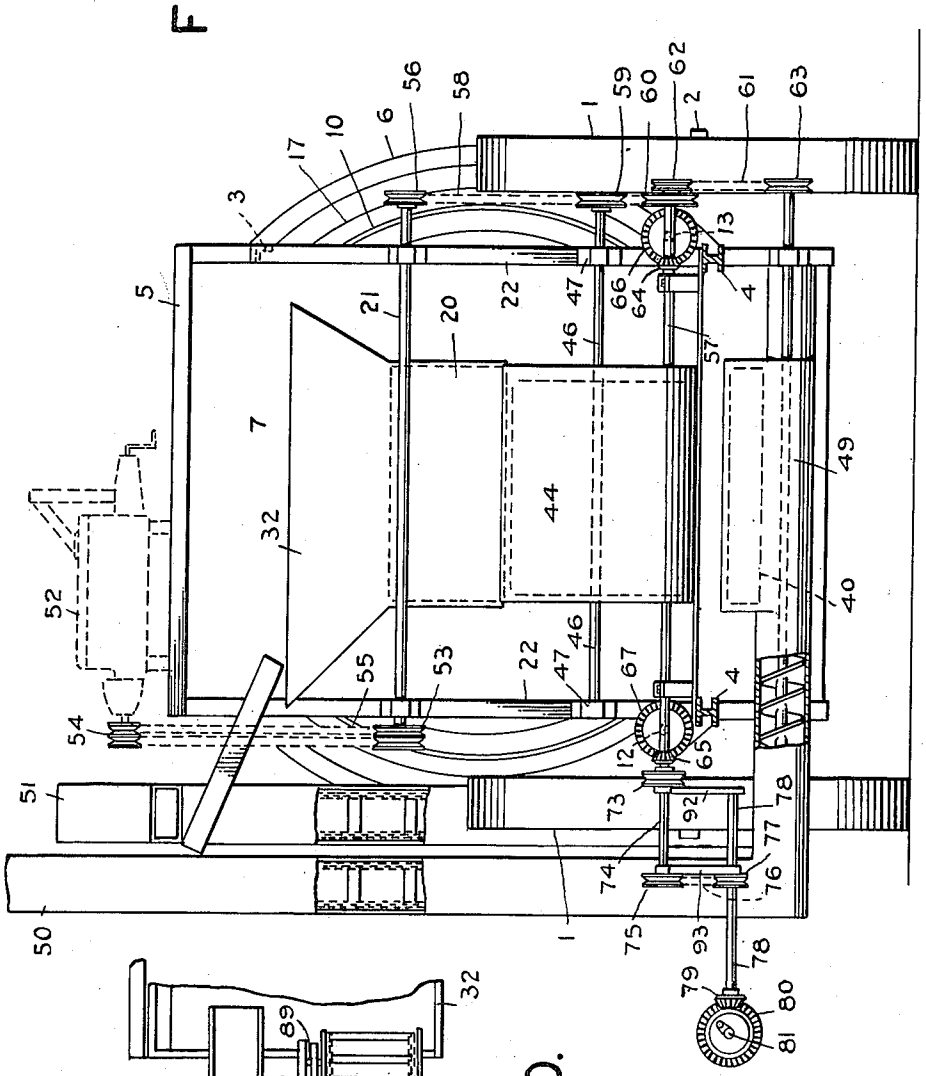

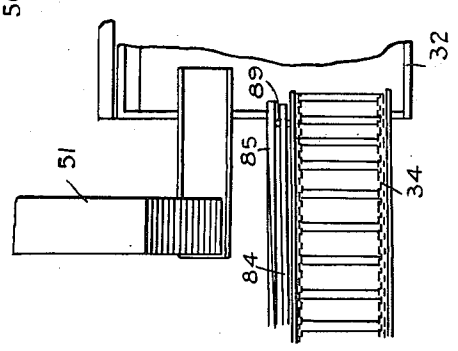

FIG. 10.

INVENTOR
ISAAC L. STEPHENSON
Schroeder & Matters
ATTORNEYS

Dec. 4, 1951 I. L. STEPHENSON 2,577,488

GRAIN SEPARATING DRUM

Filed Nov. 24, 1947 6 Sheets-Sheet 3

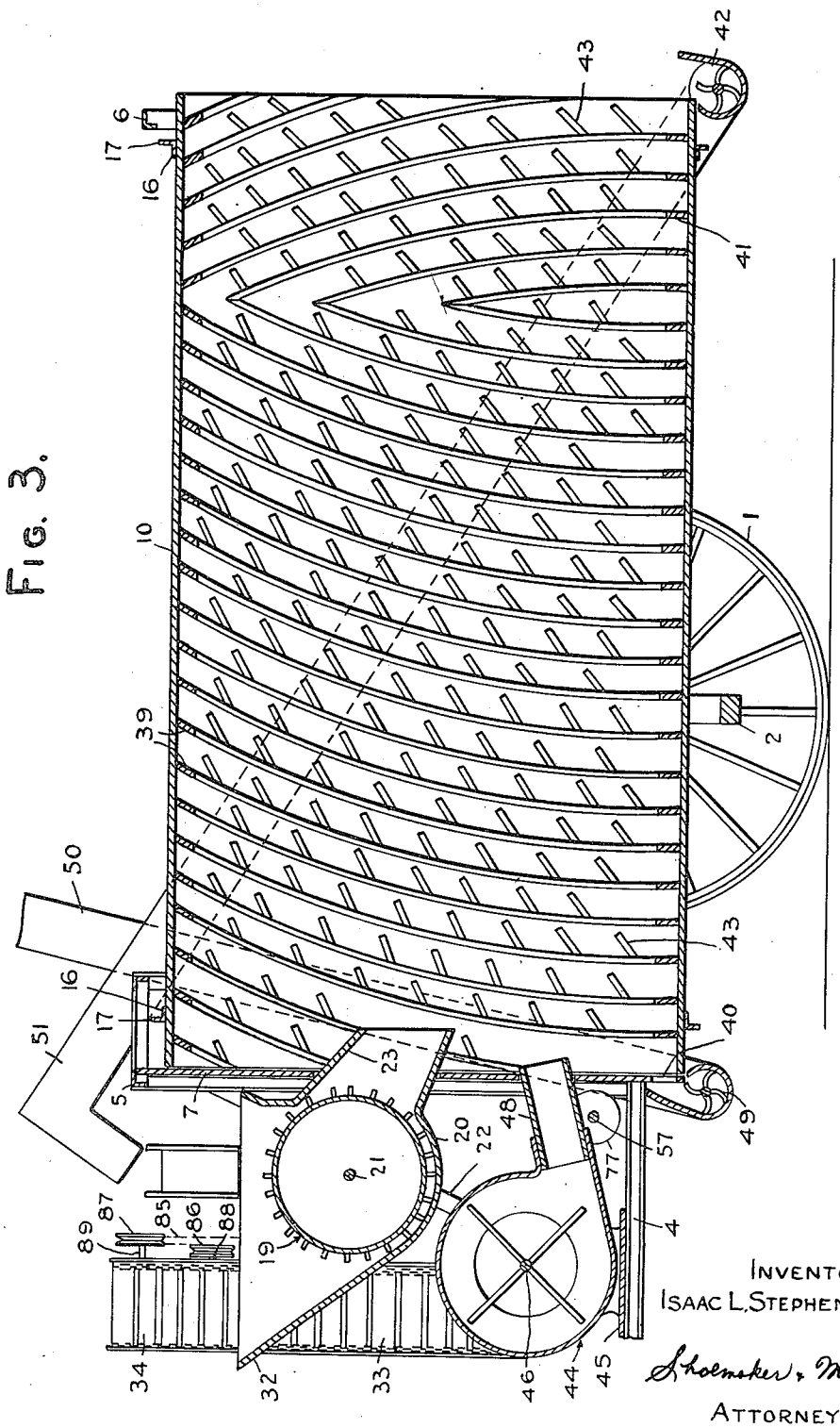

FIG. 3.

INVENTOR
ISAAC L. STEPHENSON.

Shoemaker & Mattare
ATTORNEYS

Dec. 4, 1951 I. L. STEPHENSON 2,577,488

GRAIN SEPARATING DRUM

Filed Nov. 24, 1947 6 Sheets-Sheet 4

FIG. 4.

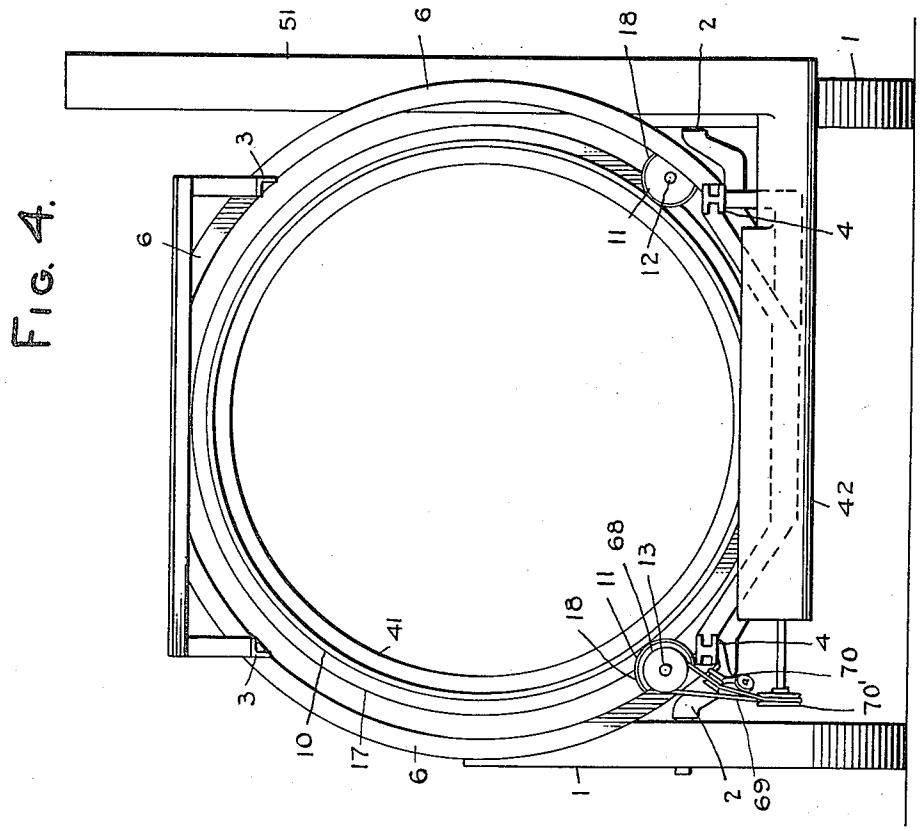

FIG. 5.

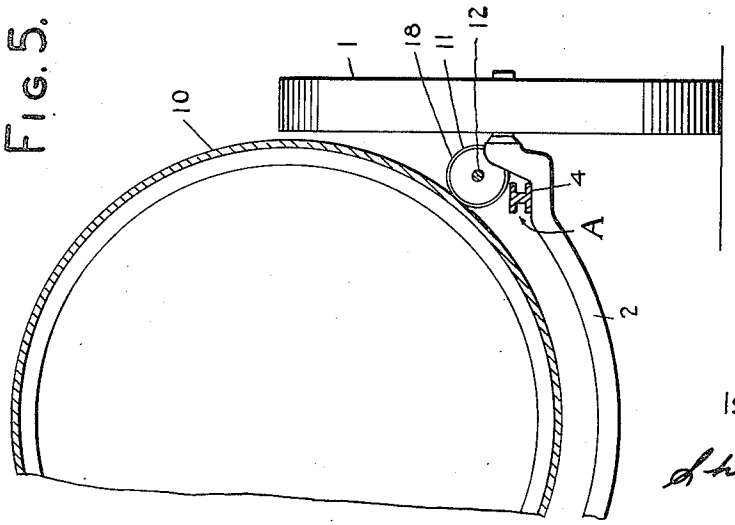

INVENTOR
ISAAC L. STEPHENSON

Shoemaker & Matter

ATTORNEYS

Dec. 4, 1951 I. L. STEPHENSON 2,577,488

GRAIN SEPARATING DRUM

Filed Nov. 24, 1947 6 Sheets-Sheet 5

FIG. 6.

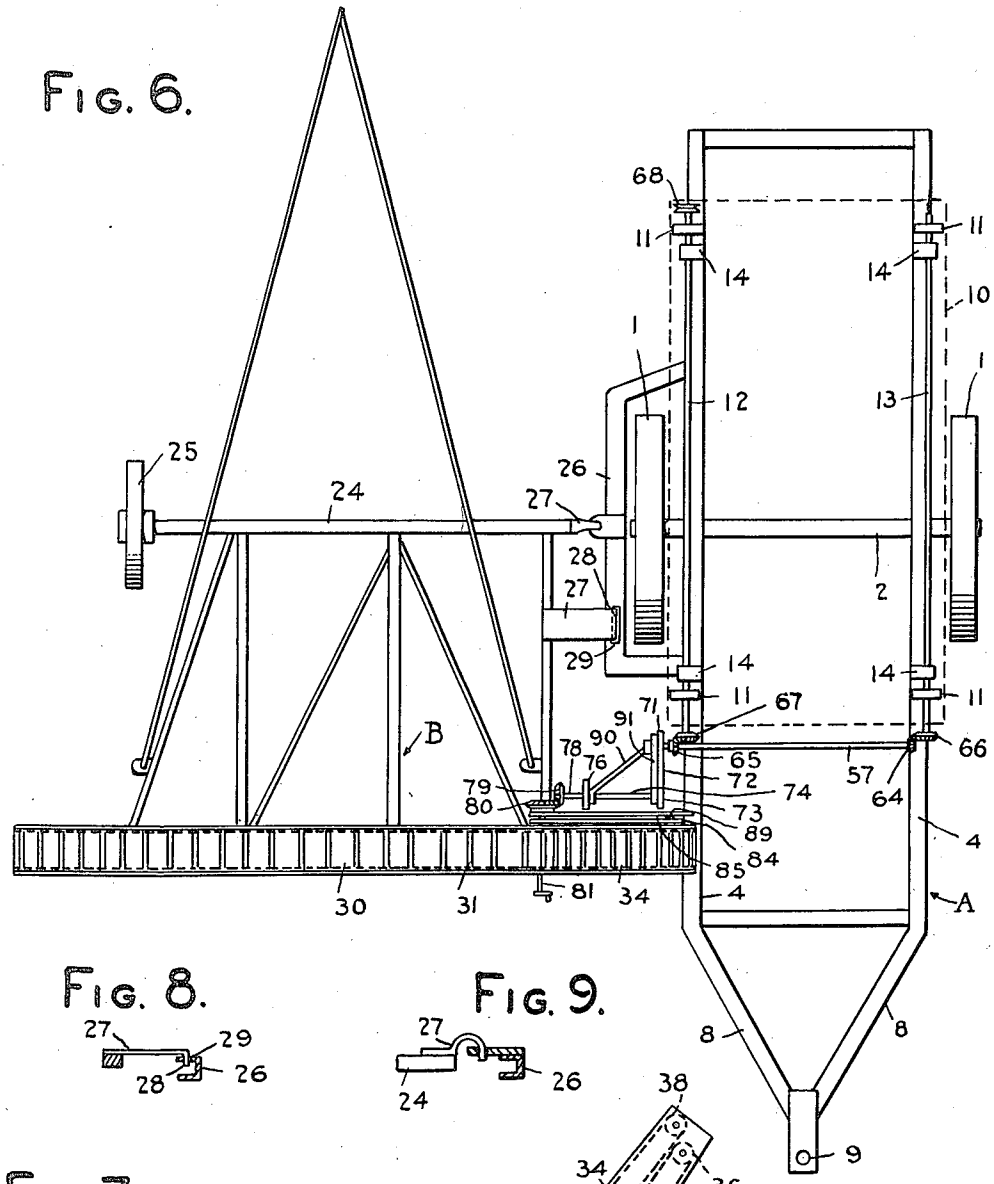

FIG. 8.

FIG. 9.

FIG. 7.

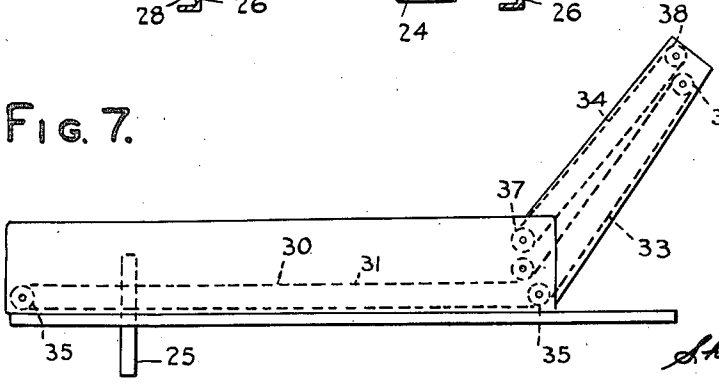

INVENTOR
ISAAC L. STEPHENSON

Shoemaker & Mattare

ATTORNEYS

Dec. 4, 1951 I. L. STEPHENSON 2,577,488

GRAIN SEPARATING DRUM

Filed Nov. 24, 1947 6 Sheets-Sheet 6

FIG. 12.

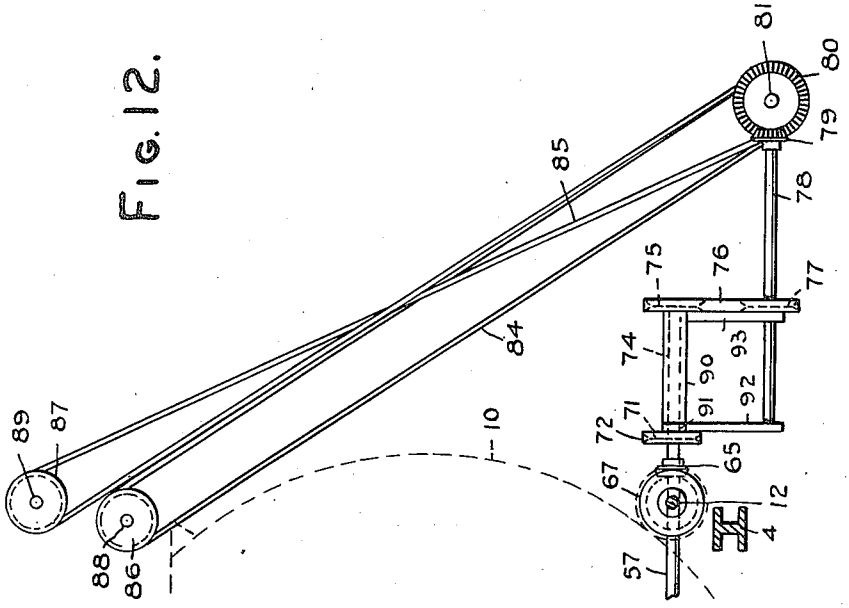

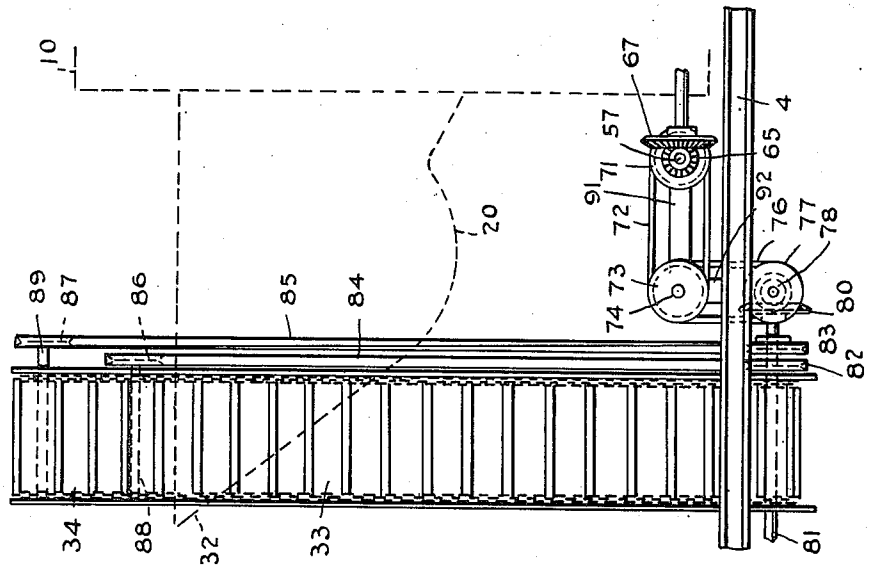

FIG. 11.

INVENTOR
ISAAC L. STEPHENSON

Shoemaker & Mattare

ATTORNEYS

Patented Dec. 4, 1951 2,577,488

UNITED STATES PATENT OFFICE

2,577,488

GRAIN SEPARATING DRUM

Isaac L. Stephenson, Darrouzett, Tex.

Application November 24, 1947, Serial No. 787,710

7 Claims. (Cl. 209—152)

1

This invention relates to improvements in grain separators of the type having a rotatable separating cylinder.

An object of the invention is to provide an improved grain separator of the type referred to of simple, strong, serviceable construction that will be efficient and reliable in operation.

Another object of the invention is to provide an improved grain separator of the type referred to by which the operation of separating the grain from the straw can be thoroughly and expeditiously performed without the use of any sieves or screens.

Another object of the invention is to provide simple, efficient means on the interior of the cylinder for conveying separated grain or kernels to a discharge outlet at the inlet end of the cylinder.

A further object of the invention is to provide improved means on the interior of the cylinder in a rear end zone thereof for conveying broken heads containing unthrashed kernels and other tailings to a discharge outlet at the rear end of the cylinder.

Still another object is to provide improved means on the interior of the cylinder for carrying the straw upwardly within the same and letting it fall, for cooperation with means producing an air blast through the cylinder from the inlet end thereof to provide for a thorough separation of the grain and for the removal of the straw from the cylinder through the rear end thereof by the air blast.

An important novel characteristic of the invention resides in the special means provided on the interior of the cylinder for carrying the straw upwardly within the same and letting it fall, cooperating with means producing an air blast through the cylinder from the inlet end thereof to effect a thorough rapid separation of the grain from the straw, and for the removal of the straw through the rear end of the cylinder.

Another important novel feature of the invention lies in the special means provided on the interior of the cylinder for conveying the separated grain forwardly within the cylinder to a discharge outlet at the inlet end of the cylinder in combination with the means on the interior of the cylinder for lifting the straw, and means producing an air blast through the cylinder from the inlet end thereof, the separated grain when being moved forwardly to the grain outlet opposite to the direction of the air blast within the cylinder, being subjected to the cleaning action of the air blast, and the latter acting in con-

2

junction with the straw lifting means to dislodge the grain from the straw, and carrying the straw rearwardly in the cylinder out through the rear end thereof.

The invention, with other objects, novel features and advantages thereof, and the particular construction, combinations and arrangements of parts comprising the same, will be understood from the following detailed description when taken in connection with the accompanying drawings forming part hereof and illustrating one embodiment of the invention.

In the drawings:

Fig. 1 is a side elevation of a grain separator constructed in accordance with the present invention;

Fig. 2 is a front elevation without the header frame and transverse conveyors;

Fig. 3 is a central longitudinal section of the construction shown in Fig. 2;

Fig. 4 is a rear end elevation;

Fig. 5 is a fragmentary transverse section on the line 5—5 of Fig. 1 looking in the direction of the arrow;

Fig. 6 is a top plan view, on a smaller scale, of the lower part of the main supporting frame and the auxiliary supporting frame for the header;

Fig. 7 is a detail side elevation of the header frame and endless transverse conveyor for carrying the harvested grain to the thrashing cylinder;

Figs. 8 and 9 are detail views of the connections between the header frame and the main frame;

Fig. 10 is a detail fragmentary top plan view of the hopper of the thrashing device with one of the transverse conveyors, and the tailings elevator;

Fig. 11 is a detail side elevation of the drive connection for the transverse conveyors;

Fig. 12 is a detail end elevation of the drive connection shown in Fig. 11, this view being taken at right angles to Fig. 11.

While a preferred embodiment of the invention is illustrated in the drawings, it will be understood that minor changes and modifications may be made in the particular construction shown, and the invention may be embodied in other forms as will appeal to those skilled in the art and falling within the scope of the appended claims, without departing from the spirit of the invention.

Referring to a detailed description of the particular embodiment of the invention illustrated in the drawings, the construction shown includes a main wheeled frame A comprising supporting

wheels 1, an axle 2, and upper and lower pairs of side rails 3 and 4 of angle iron connected by transverse angle iron members 5 and 6, the lower side rails 4 being suitably secured to the axle 2. The frame A at its forward end is completely closed by a covering 7 of sheet iron suitably secured to the transverse frame members 5 and the side rails 3 and 4. The lower pair of side rails 4 extend forwardly of the sheet iron covering 7 and extending forwardly therefrom are converging frame bars 8 forming a draft tongue which has a hitch 9 for connection with a tractor, not shown.

As illustrated in Fig. 4 of the drawings, the transverse connecting members 6, at the rear end of the frame, are curved outwardly to conform to the general curvature of the separator cylinder or drum 10. The separator cylinder or drum 10 is supported for rotation on wheels 11 fixed on longitudinally extending shafts 12 and 13 journaled in bearings 14, on the lower part of the frame A at opposite sides thereof, the cylinder or drum having thereon annular tracks 16 engaging the wheels 11, the tracks 16 having side portions 17 projecting outwardly adjacent the inner sides of the wheels 11 to prevent endwise movement of the cylinder or drum.

As shown in Fig. 3 of the drawings, the separator cylinder is supported with its forward end close to the sheet iron covering 7, the cylinder being substantially closed at its forward end by said covering but ample clearance space between the parts being provided for. The shafts 12 and 13 are rotated in unison, and rotary movement is imparted to the cylinder 10 through the wheels 11, the latter being provided with rubber facings or tires 18 to provide the necessary frictional driving engagement of the wheels with the cylinder. At the front side of the sheet iron closure 7 is a threshing cylinder 19 and cooperating concave 20 of conventional form. 21 designates the shaft of the threshing cylinder journaled in bearings on inclined frame members 22 extending from the lower side rails 4 of the frame to the upper part of the sheet iron covering 7. As shown in Fig. 3 of the drawings, the concave 20 which is secured to the sheet iron closure 7 delivers the threshed material into the forward end of the separator cylinder through a spout portion 23 that extends through an opening in the closure 7.

Connected to the supporting frame A, at one side thereof, is a frame B for supporting a header or harvester mechanism, not shown, the same being of conventional form. The header frame B, which as shown in Fig. 6, includes an axle 24 with a supporting wheel 25 on the outer end thereof, may be connected with the main wheel frame A in any suitable way. In the drawings, the header frame is shown connected to a lower frame part 26 of the main frame by a pair of coupling members 27, each of which has a hook-like portion 28 at its outer end engaging a slot 29 in the part 26, the connection being such as to allow for limited vertical sidewise tilting movement of the header frame relatively to the main frame A. At the forward part of the header frame, extending across the same, is a horizontal stretch 30 of an endless slatted conveyor 31 for receiving the heads of grain from the cutting mechanism and conveying the same laterally of the header frame to the hopper 32 associated with the threshing cylinder 19, said conveyor having an inner inclined stretch 33 extending upwardly from the inner side of the header frame to the

hopper 32. Disposed opposite to and cooperating with the inclined stretch 33 of the conveyor 31 is an inclined endless conveyor 34. The conveyor 31 is supported on rollers 35 on the header frame and a roller 36 suitably mounted on the main frame. The conveyor 34 is supported by rollers 37 and 38 mounted respectively on the header frame and main frame A.

The separator cylinder or drum 10 has on the interior thereof a series of spiral radially projecting parallel ribs 39 extending from the front end of the cylinder to a rear section thereof, said ribs being disposed to act as an auger to force the separated grain forwardly in the cylinder to a discharge outlet 40 at the front end of the cylinder. The cylinder or drum also has on the interior thereof a series of spiral radially projecting ribs 41 extending from the rear ends of the series of ribs 39 to the rear end of the drum, this latter series of ribs being disposed reversely to the series of ribs 39 to convey the tailings such as heads containing unthreshed grain and the like to the inlet end of an auger conveyor 42 located at the rear end of the cylinder or drum. On each of the spiral ribs, at regular intervals along the same, are fingers 43 projecting laterally therefrom at an inclination to the direction of rotation of the cylinder and adapted, in the rotation of the cylinder or drum, to pick up the straw and carry it upwardly to the upper part of the cylinder and then letting it fall. The fingers 43 are secured to the spiral ribs by welding or in any other suitable way.

At the front side of the sheet iron covering 7, forwardly and centrally of the lower part thereof, is a fan 44, the same being mounted on a transversely extending support 45 secured to the lower pair of longitudinal rails 4, the shaft 46 of the fan being supported in bearings 47 on the inclined frame members 22. As shown in Fig. 1 of the drawings, the fan is arranged with its discharge nozzle 48 disposed at an upward inclination extending through an opening in the lower part of the sheet iron covering 7 to direct a blast of air through the cylinder or drum at an upward inclination from the lower part of the front end thereof, the blast of air produced by the fan 44 acting to separate the grain from the straw and blowing the straw outwardly through the rear end of the cylinder or drum.

In the operation of the separator, the heads of grain are carried from the header or harvester laterally and upwardly by the conveyors 31 and 34 to the hopper 32 of the threshing cylinder 19 and concave 20, the threshed grain being delivered from the concave 20 through the spout portion 23 to the interior of the cylinder or drum at its forward end substantially centrally thereof. The straw will be lifted by the fingers 43 and dropped from the upper part of the cylinder or drum, the straw being caught in the blast of air produced by the fan 44, the latter acting in conjunction with the straw lifting fingers to dislodge the grain from the straw, and carrying the straw rearwardly in the cylinder out through the rear end thereof. The separated grain is conveyed forwardly within the cylinder or drum to the discharge outlet 40 at the forward end thereof, said outlet communicating with a transversely extending auger conveyor 49. The auger conveyor 49 conveys the grain laterally to the grain elevator 50, which carries the separated grain upwardly and discharges it into a recleaner device or grain storage tank, not shown. As the separated grain

is carried forwardly in the cylinder by the spiral ribs 39, it is subjected to the cleaning action of the blast of air produced by the fan.

The tailings, such as broken heads containing unthreshed grain and the like, are conveyed by the series of spiral ribs 41, rearwardly in the drum, to the auger conveyor 42 at the rear end of the drum. This auger conveyor conveys the tailings to the tailings elevator 51 which delivers them to the hopper 32 of the threshing cylinder 19 for rethreshing.

Power for operating the separating cylinder or drum 10 and associated devices is supplied through pulleys and V-belts by an engine 52 mounted on the upper forward part of the frame A. On one end of the shaft 21 of the thrashing cylinder 19 is fixedly secured a pulley 53 and motion is imparted thereto from the drive pulley 54 of the engine of a V-belt 55. Fixed on the upper end of the thrashing cylinder shaft 51 is a pulley 56. Motion is transmitted from the shaft 21 to the fan shaft 46 and to a transverse shaft 57 suitably supported on the frame A at the lower forward part thereof by a belt 58, said belt engaging the pulley 56 and pulleys 59 and 60 on the fan shaft 46 and shaft 57 respectively. The auger conveyor 49 is driven from the shaft 57 through a belt 61 engaging a pulley 62 on said shaft and a pulley 63 on the shaft of the conveyor. Motion is imparted to the separator cylinder or drum 10 from the shaft 57 by beveled pinions 64 and 65 on the opposite ends of said shaft meshing respectively with beveled pinions 66 and 67 on the forward end of shafts 12 and 13. On the rear end of the shaft 13 is a pulley 68 and motion is imparted therefrom to the shaft of the tailings conveyor 42 at the rear end of the cylinder or drum through a belt 69 engaging said pulley, an idler guide pulley 70 on the frame, and a pulley 71 on the shaft of the tailings conveyor. Oil tight casings, not shown, are provided for the intermeshing beveled pinions 64, 65, 66, and 67.

As shown in Figs. 6, 11 and 12 of the drawings, on one end of the transverse shaft 57 is a pulley 71 that is connected by a belt 72 with a pulley 73 on the inner end of a transverse shaft 74. On the outer end of the shaft 74 is a pulley 75, which is connected by a belt 76 to a pulley 77 on a transverse shaft 78 on the outer end of which is a beveled pinion 79 that meshes with a beveled pinion 80 on the longitudinally extending sickleshaft 81 of the header. From the sickleshaft 81 motion is transmitted to the conveyors 31 and 34 through pulleys 82, 83 on the sickle shaft 81 connected respectively by belts 84, 85 to pulleys 86, 87 on the shaft 88 of the roller 36 of the conveyor 31, and the shaft 89 of the roller 38 of the conveyor 34. The transverse shaft 74 is pivotally connected to the shaft 57 by horizontally extending links 90 and 91, and 92 and 93 are vertically extending pivotal link connections between the shaft 74 and shaft 78.

What I claim is:

1. A grain separator including an elongated cylindrical imperforate rotatable drum, means for feeding thrashed grain into the drum at the front end thereof, a discharge outlet for separated grain at the front thrashed grain inlet end of the drum, an outlet for straw and tailings at the rear end of the drum, means on the interior of the drum for conveying separated grain to the discharge outlet at the front thrashed grain inlet end thereof, inwardly projecting fingers on the interior of the drum adapted in the rotation of the drum to pick up the straw and carry it upwardly to the upper part of the drum and then letting it fall, and means for producing an air blast through the drum from the front thrashed grain inlet end thereof, the air blast carrying the straw rearwardly in the drum through the outlet at the rear end thereof, and the separated grain as it is carried forwardly toward the thrashed grain inlet end of the drum being subjected to the cleaning action of the air blast.

2. A grain separator including an elongated cylindrical imperforate rotatable drum, means for feeding thrashed grain into the drum at the front end thereof, a discharge outlet for separated grain at the front thrashed grain inlet end of the drum, an outlet for straw and tailings at the rear end of the drum, said drum having on the interior thereof spiral radially projecting means disposed to convey separated grain forwardly within the drum to the discharge outlet at the front thrashed grain inlet end thereof, inwardly projecting fingers on the interior of the drum at intervals along and about the same adapted in the rotation of the drum to pick up the straw and carry it upwardly in the drum and then letting it fall, and means for producing an air blast through the drum from the front thrashed grain inlet end thereof, the air blast carrying the straw rearwardly in the drum through the outlet at the rear end thereof, and the separated grain as it is conveyed forwardly toward the thrashed grain inlet of the drum being subjected to the cleaning action of the air blast.

3. A grain separator including an elongated cylindrical imperforate rotatable separating drum, means at the front end of the drum for feeding thrashed grain thereto, a discharge outlet for separated grain at the front thrashed grain inlet end of the drum, a discharge outlet for straw and tailings at the rear end of the drum, spiral radially projecting means on the interior of the drum extending from the front thrashed grain inlet end thereof to a rear end zone of the drum and disposed to convey separated grain forwardly to the discharge outlet at the front thrashed grain inlet end of the drum, spiral radially extending means on the interior of the drum along said end zone disposed reversely to the first mentioned spiral means to convey tailings rearwardly to said discharge outlet at the rear end of the drum, and means within the drum adapted in the rotation of the drum to pick up the straw and carry it upwardly to the upper part of the drum, and then letting it fall, and means for producing an air blast through the drum from the inlet end thereof, the air blast carrying the straw rearwardly through the outlet at the rear end of the drum, and the separated grain as it is conveyed forwardly toward the thrashed grain inlet of the drum being subjected to the cleaning action of the air blast.

4. A grain separator including an elongated cylindrical imperforate rotatable drum, means at the front end of the drum for feeding thrashed grain thereto, a discharge outlet for separated grain at the front thrashed grain inlet end of the drum, an outlet for straw and tailings at the rear end of the drum, said drum having on the interior thereof spiral radially projecting ribs disposed to convey separated grain to the discharge outlet at the front

thrashed grain inlet end of the drum, and fingers projecting laterally from the spiral ribs at intervals along the same adapted in the rotation of the drum to pick up the straw and carry it upwardly to the upper part of the drum, and then letting it fall, and means for producing an air blast through the drum from the front thrashed grain inlet end thereof, the air blast carrying the straw rearwardly through the outlet at the rear end of the drum, and the separated grain as it is conveyed forwardly toward the thrashed grain inlet of the drum being subjected to the cleaning action of the air blast.

5. A grain separator including an elongated cylindrical imperforate rotatable drum, means at the front end of the drum for feeding thrashed grain thereto, a discharge outlet for separated grain at the front thrashed grain inlet end of the drum, an outlet for straw and tailings at the rear end of the drum, said drum having on the interior thereof spiral radially projecting ribs disposed to convey separated grain to the discharge outlet at the front thrashed grain inlet end of the drum, and fingers projecting laterally at an inclination from the spiral ribs at intervals along the same adapted in the rotation of the drum to pick up the straw and carry it upwardly to the upper part of the drum, and then letting it fall, and means for producing an air blast through the drum from the front thrashed grain inlet end thereof, the air blast carrying the straw rearwardly through the outlet at the rear end of the drum, and the separated grain as it is conveyed forwardly toward the thrashed grain inlet of the drum being subjected to the cleaning action of the air blast.

6. A grain separator including an elongated cylindrical imperforate rotatable separating drum, means at the front end of the drum for feeding thrashed grain thereto, a discharge outlet for separated grain at the front thrashed grain inlet end of the drum, a discharge outlet for straw and tailings at the rear end of the drum, said drum having on the interior thereof spiral radially projecting ribs extending from the front thrashed grain inlet end of the drum to a rear end zone of the same and disposed to carry separated grain to the discharge outlet at the front thrashed grain inlet end of the drum, spiral radially projecting ribs on the interior of the drum along said end zone disposed reversely to the first mentioned spiral ribs to convey tailings rearwardly to said discharge outlet at the rear end of the drum, fingers projecting laterally from the first mentioned and second mentioned spiral ribs at intervals along the same, and means for producing an air blast through the drum from the inlet end thereof, the air blast carrying the straw rearwardly through the outlet at the rear end of the drum, and the separated grain as it is conveyed forwardly toward the thrashed grain inlet of the drum being subjected to the cleaning action of the air blast.

7. A grain separator including an elongated cylindrical imperforate rotatable drum, means at the front end of the drum for feeding thrashed grain thereto, a discharge outlet for separated grain at the front thrashed grain inlet end of the drum, an outlet for straw and tailings at the rear end of the drum, said drum having on the interior thereof spiral radially projecting ribs disposed to convey separated grain to the discharge outlet at the inlet end of the drum, and means within the drum adapted in the rotation of the drum to pick up the straw and carry it upwardly to the upper part of the drum, and then letting it fall, and means for directing a blast of air through the drum from the front end thereof at an upward inclination toward the rear end of the drum, the air blast carrying the straw rearwardly through the outlet at the rear end of the drum, and the separated grain as it is conveyed forwardly toward the thrashed grain inlet of the drum being subjected to the cleaning action of the air blast.

ISAAC L. STEPHENSON.

REFERENCES CITED

The following references are of record in the file of this patent:

UNITED STATES PATENTS

Number	Name	Date
23,965	Vaughn	May 10, 1859
107,994	Allonas	Oct. 4, 1870
323,726	Payne	Aug. 4, 1885
413,161	Beeman	Oct. 22, 1889
444,936	Haines	Jan. 20, 1891
516,926	Geiser	Mar. 20, 1894
530,815	Woodburn	Dec. 11, 1894
741,136	Hurst	Oct. 13, 1903
801,141	Erickson	Oct. 3, 1905
938,138	Gotshall	Oct. 26, 1909
1,182,484	Holt	May 9, 1916
1,254,750	Wieler	Jan. 29, 1918
1,374,518	Oda	Apr. 12, 1921
1,386,298	Winslow	Aug. 2, 1921
2,129,452	Van Sickle	Sept. 6, 1938