Sept. 9, 1941. F. D. JOESTING ET AL 2,255,220

SWITCHING MECHANISM

Filed Aug. 12, 1938

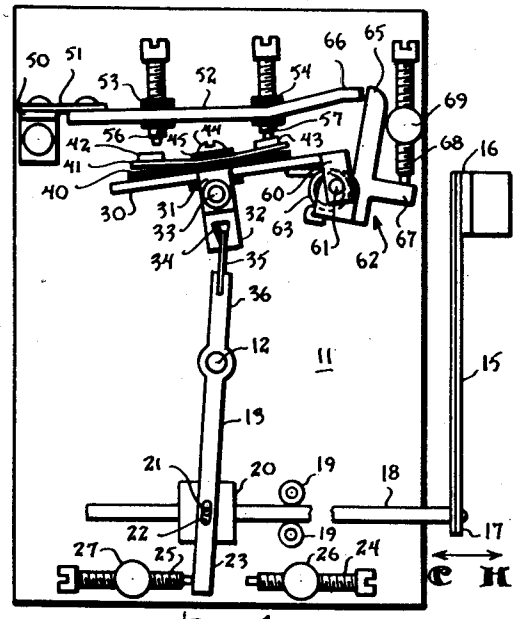

Fig.1

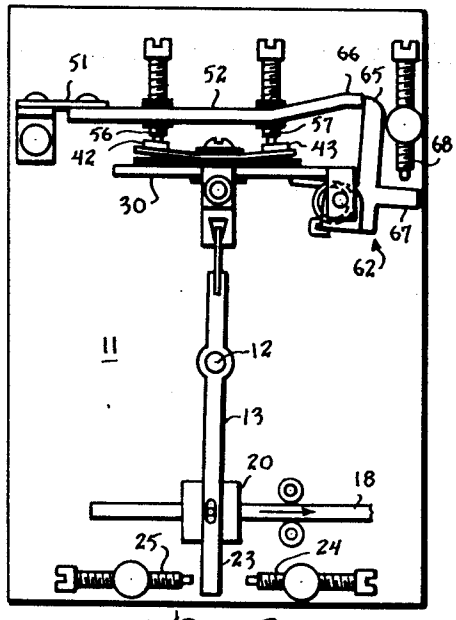

Fig.2

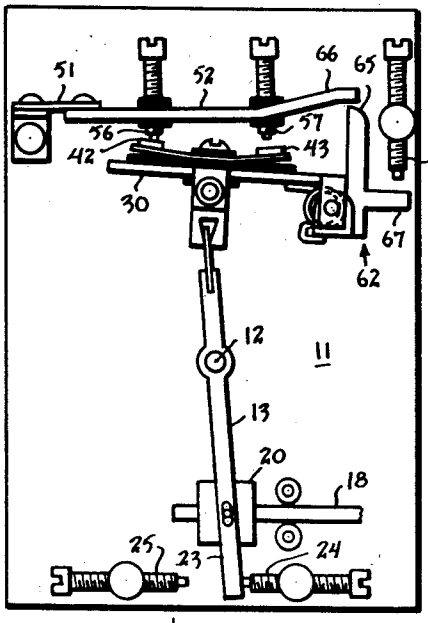

Fig.3

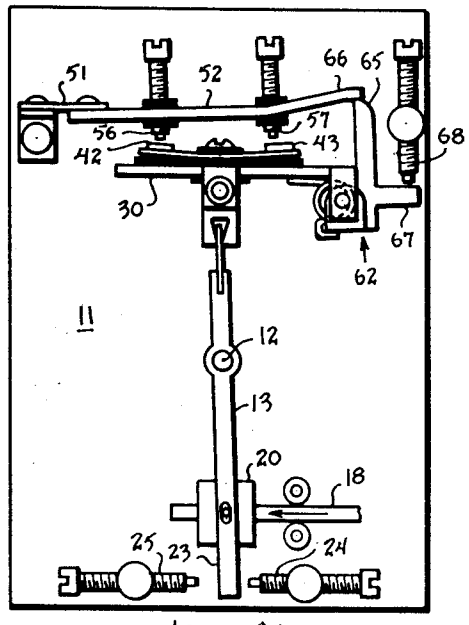

Fig.4

Inventors
Leslie H. Miller
Frederick D. Joesting
By George H. Fisher
Attorney

Patented Sept. 9, 1941

2,255,220

UNITED STATES PATENT OFFICE

2,255,220

SWITCHING MECHANISM

Frederick D. Joesting, Chicago, Ill., and Leslie H. Miller, Minneapolis, Minn., assignors to Minneapolis-Honeywell Regulator Company, Minneapolis, Minn., a corporation of Delaware

Application August 12, 1938, Serial No. 224,530

13 Claims. (Cl. 200—138)

This invention relates generally to the art of electric switching and more particularly to a plurality of switches which are operated in a certain order by a condition responsive device.

In certain types of oil burner control systems, such for example as the system disclosed in the patent to Kriechbaum 1,921,196, it is desirable to provide a combustion responsive switch which will close one circuit on a rise in temperature and will close a second circuit on a fall in temperature. Furthermore these circuits must be overlappingly controlled in one direction and non-overlappingly controlled in the other; that is, as the temperature rises one circuit must be made before the other circuit is broken, and on a fall in temperature the one circuit must be broken before the other circuit is made.

It is a prime object of this invention to provide an automatic switching mechanism which will meet the above requirements.

A further object is to provide a switching mechanism which will produce the desired operating sequence with a minimum amount of force and movement.

A further object is to provide a switch mechanism of the above type which is operated by a temperature responsive device through a slip friction connection so that the switches will be operated on a change in temperature rather than on any absolute temperature, and one of the switches will be operated substantially immediately upon a change in temperature in either direction.

A further object is to provide a switching mechanism having two sets of contacts wherein engagement of one set will cause disengagement of the other set on a change in the condition value in one direction, and wherein a latch is provided to prevent engagement of the other set until after the disengagement of the first set on an opposite change in the condition value.

A still further object of the invention is to provide adjusting means in a switching mechanism of the above type so that the timing of the various switching operations may be predetermined.

Although this switching mechanism has been mentioned in connection with an oil burner control system it is obvious that it may have many other uses and it is therefore intended that this application be directed to the switching mechanism per se rather than its use in any particular system.

For a better understanding of the device, reference is made to the following specification in conjunction with the accompanying drawing, in which

Figure 1 illustrates the switch mechanism of our invention with the parts in cold position,

Figure 2 shows an intermediate position of the switch on a rising temperature,

Figure 3 shows the switch in hot position, and

Figure 4 shows an intermediate position of the switch on a falling temperature.

The switch mechanism of our invention is mounted on an insulating panel 11 which carries a pin 12 about which lever 13 is adapted to rotate. Diagrammatically illustrated at 15 is a thermostatic element having a fixed end 16 and a free end 17 which is connected to an operating rod 18. The rod 18 passes between and is guided by a pair of rollers 19. An element 20 is provided with a transverse hole (not shown) through which the operating rod 18 extends in a manner to produce a slip friction connection between the two. The element 20 is provided with a pin 21 which extends through an elongated slot 22 in the lower part of the lever 13. The lower end 23 of the lever 13 is adapted to oscillate between a pair of adjustable stops 24 and 25 which are screw-threadedly mounted in posts 26 and 27, respectively. On variations in temperature, the thermostat 15 moves the operating rod 18 back and forth carrying with it the friction element 20 which in turn causes rotation of the lever 13. The stops 24 and 25 limit the movement of the lever 13 and hence the friction element 20, and on further deflection of the thermostat 15, the operating rod 18 will slip with respect to the friction element 20. The purpose of this arrangement is to cause the lever 13 to be actuated on a change in temperature rather than have its movement dependent upon any particular degree of temperature.

A lever 30 is rotatably mounted by means of two depending ears 31 and 32 on a pin 33 which is suitably secured to the base 11. The ear 32 is provided with a tapered slot 34 in which is inserted one end of a metal piece 35 which is carried by the upper end 36 of the lever 13. Rotation of the lever 13 will therefore produce a rotation of the lever 30 through the engagement of the metal piece 35 with the slot 34.

Mounted on the upper side of the lever 30 is an insulating strip 40 on which rests a flexible strip 41 having two electrical contacts 42 and 43 mounted on the opposite ends thereof. The strip 41 is provided with an oversize hole through which extends the stem of a screw 44, which screw-threadedly engages the lever 30 and clamps the strip 41 and insulation 40 to the lever

30 through an insulating washer 45. In this manner, the flexible strip 41 is supported on but is insulated with respect to the lever 30.

Suitably mounted on the base 11 is a bracket 50 which carries a flexible metallic strip 51 to which is connected a contact arm 52. The flexible strip 51 biases the contact arm 52 downwardly toward lever 30. The arm 52 is provided with a pair of holes in which are inserted insulating bushings 53 and 54 having metal inserts in which are screw-threaded the adjustable contacts 56 and 57. The contacts 56 and 57 are so positioned as to cooperate with the contacts 42 and 43 mounted on the flexible strip 41.

The lever 30 is provided with a pair of ears, one of which is shown at 60 and between which is mounted a pin 61 which rotatably carries a latch generally indicated at 62. Spring member 63 is coiled about the pin 61 and one end engages beneath the lever 30 and the other end engages the latch 62 to bias the latch for rotation in a counter-clockwise direction with respect to the lever 30.

The latch 62 is provided with an arm 65 which is adapted to cooperate with the end 66 of the lever 52 in a manner to be described later on in detail, and an arm 67 which is adapted to cooperate with a stop 68 which is screw-threadedly mounted in post 69 which is in turn secured to the base 11.

In considering the operation of the switch mechanism, it is assumed that the thermostat 15 flexes toward the left as shown in Figure 1 on a fall in temperature and towards the right on a rise in temperature. Figure 1, therefore, discloses the parts in their cold position at which time the contacts 43 and 57 are closed. It is understood that the flexible strip 41 and the adjustable contacts 56 and 57 are each individually connected to conductors for connection with suitable outside circuits. On an increase in temperature at the thermostat 15, it will start to flex toward the right carrying with it the friction element 20 which produces a counter-clockwise rotation of the lever 13. By means of the metal piece 35, the lever 13 produces a clockwise rotation of the lever 30 which will eventually bring the contacts 42 and 56 into engagement while the contacts 43 and 57 remain in engagement. This condition is illustrated in Figure 2. Up to this point, the latch 62 has not entered into the operation of the switch mechanism. On a further rise in temperature, the lever 30 will continue to rotate in a clockwise direction and through its engagement with the lever 52 through the contacts 42 and 56 will cause the lever 52 to rotate in a counter-clockwise direction against the bias of the flexible strip 51 causing a separation of the contacts 43 and 57. Just before the end 23 of the lever 13 strikes the adjustable stop 24, as shown in Figure 3, it will be noted that the arm 65 on the latch 62 has dropped off the end 66 of the lever 52 and now engages underneath this lever under the influence of the coil spring 63. This is the hot position of the switch mechanism and is illustrated in Figure 3. Any further heating of the thermostat 15 will not affect the position of the switch because the stop 24 prevents further movement of the lever 13. However, the thermostat will be permitted to flex further due to the fact that the operating rod 18 will slip through the hole in the friction element 20.

Immediately upon a decrease in the temperature at the thermostat 15, the operating rod 18 will move towards the left carrying with it the friction element 20 which will produce a clockwise rotation of the lever 13. The lever 13 will cause a counter-clockwise rotation of the lever 30 and in doing so will raise the latch 62 and as the arm 65 is carried beneath the end 66 of the lever 52, it will raise the lever 52 against the force exerted by the resilient strip 51 while contact 42 is moving downwardly and cause a separation of the contacts 42 and 56. This condition is illustrated in Figure 4.

On a further decrease in temperature, the lever 30 will be further rotated in a counter-clockwise direction and the arm 67 on the latch 62 will eventually strike the adjustable stop 68 which will cause the latch 62 to rotate in a clockwise direction about the pin 61 causing the arm 65 to move towards the right as viewed in Figure 4 and release the arm 52, at which time the resilient strip 51 will force the lever 52 in a clockwise direction to cause engagement of the contacts 43 and 57. Contacts 42 and 56 have been sufficiently separated by this time so that they are not reengaged when contacts 43 and 57 make contact with each other. At this time, end 23 of the lever 13 will engage the stop 25 to limit further movement of the switch mechanism. Any further decrease in temperature in the thermostat 15 will not affect the switch mechanism but the friction element will permit a further deflection of the thermostat. Thus the parts have been returned to their cold position which is illustrated in Fig. 1 and the above cycle may be repeated indefinitely.

It will be seen therefore that a switch mechanism has been provided which in its cold position has one set of switch contacts closed and which on a rise in temperature first closes a second set of switch contacts and then breaks the first set of switch contacts, the second set of switch contacts being closed with the mechanism in its hot position, and which on a decrease in temperature first breaks the second set of switch contacts and then remakes the first set of switch contacts which remain closed in the cold position of the mechanism. In other words, a pair of switches are provided which are mechanically actuated from a thermostat to provide for an overlap on heating and not on cooling.

It will be appreciated that various adjustments have been provided so that the time between the various operations may be nicely adjusted. For instance, the switch contacts 56 and 57 are both adjustably mounted on the lever 52 and the stop 68 is adjustably mounted in the post 69. If the stop 68 is lowered, the time required for the switch 43, 57 to be closed following the opening of the switch 42, 56 will be reduced, and conversely, if the stop is raised this time will be increased. Also if the contact screw 56 is raised, the time between the closing of the switch 43, 57 and the closing of the switch 42, 56 is increased. Thus by these adjustments the timing of the various switch operations may be changed. Also the stops 24 and 25 are made adjustable so that the movement of the lever 13 may be limited to the proper range to permit the proper actuation of the switch mechanism without necessitating any unnecessary movement of the lever. For instance, the stop 25 must be so positioned as to permit the lever 13 to move sufficiently far to move the arm 65 from beneath the end 66 of the lever 52 to permit the contacts 43 and 57 to engage. On the other hand, the stop 24 must be so positioned that the lever 13 can be moved far

enough to permit the arm **65** to drop off the end **66** and latch itself beneath the lever **52**. If sufficient movement is not obtained to move the latch **62** in this manner, the mechanism will become inoperative for the purpose for which it was devised. Also by moving the stop **24** towards the right the amount of temperature drop required to open the contacts **42**, **56** may be adjusted.

There are two decided advantages in this switch actuating mechanism aside from the timing and sequence features. One is that as the contacts are actuated there is a slight sliding movement with respect to the contacts so that their surfaces will always be kept clean. Another feature is that the contacts will always be made with a good firm pressure. The contacts **43** and **57** are made by the lever **52** dropping off the arm **65** which will assure a good firm contact and the lever **52** is raised by the coaction between the contacts **42** and **56** so that a good firm contact pressure between these contacts is also assured. A third and perhaps the most important feature is that the proper sequence of switch operations is obtained by using a slight force which operates through only a small distance. Thus the force required to move the rod **18** is small and need operate only through the distance determined by the stops **24** and **25**.

Certain changes and modifications in this invention will undoubtedly occur to those who are skilled in the art and it is therefore understood that we intend to be limited by the scope of the appended claims rather than by the specific embodiment disclosed.

We claim as our invention:

1. A switching mechanism comprising a first movable member, a second movable member, a first switch formed by a first contact on said first member and a first contact on said second member, a second switch formed by a second contact on said first member and a second contact on said second member, means for moving said first member, means on said first member for moving said second member, and a stationary element causing said latter means to disengage said second member.

2. In combination, a switch arm, a pair of contacts mounted for cooperation with said switch arm, a condition responsive device for moving said arm in one direction to first engage one contact and then separate from the other, and means carried by said switch arm for holding said other contact out of engagement with said switch arm until after the switch arm has separated from said one contact on movement of said switch arm in the opposite direction.

3. In a device of the character described comprising in combination, a switch arm, a movable member, a pair of contacts carried by said movable member, a condition responsive device for moving said arm in one direction to first engage one contact and then separate from the other, means on said arm engaging and moving said movable member as said condition responsive device moves said switch arm in the opposite direction so as to prevent said switch arm from engaging said other contact, and means for disengaging said first mentioned means from said movable member after said switch arm has dis engaged said one contact to permit it to engage said other contact.

4. In a device of the character described comprising in combination, a switch arm, a movable member, a pair of contacts carried by said movable member, a condition responsive device for moving said arm in one direction to first engage one contact and then separate from the other, means pivoted on said switch arm engaging and moving said movable member as said condition responsive device moves said switch arm in the opposite direction so as to prevent said switch arm from engaging said other contact, and a stationary stop, continued movement of said switch arm in said opposite direction first causing separation of said one contact from said switch arm, after which said pivoted means will engage said stop causing said pivoted means to rotate about its pivot and disengage said member permitting said other contact to come into contact with said switch arm.

5. A switching mechanism comprising in combination, a pivotally mounted switch arm, a member mounted for swinging movement, a pair of contacts on said member, means for insulating said contacts with respect to each other, means on said switch arm for cooperation with said contacts, a lever pivoted on said switch arm, means biasing said lever to a position where it will engage said member upon rotation of said switch arm in one direction, and a stop adjacent said lever for causing it to rotate about its pivot on rotation of said switch arm.

6. A switching mechanism comprising in combination, a first switch arm pivotally mounted intermediate its ends, contacts on said switch arm on opposite sides of its pivot, a second switch arm, means connected to one end of said second switch arm for mounting it for rotative movement and for biasing it toward said first switch arm, a pair of contacts on said second switch arm, a condition responsive device for rotating said first switch arm in one direction to cause one of its contacts to engage one of the contacts on said second switch arm, such engagement on further rotation of said first switch arm causing a swinging movement of said second switch arm and a disengagement of the other contacts, a latch on said first switch arm for engaging said second switch arm and swinging it further as said condition responsive device rotates said first switch arm in the opposite direction to cause disengagement of said engaged contacts, and means for tripping said latch to permit engagement of said other contacts upon further rotation of said first switch arm in the opposite direction by said condition responsive device.

7. A switch mechanism comprising a pair of levers, a pair of switch contacts on each lever, the contacts on one lever cooperating with the contacts on the other lever, rotation of one lever in one direction causing engagement of one set of contacts which in turn causes disengagement of the other set of contacts, latch means for causing disengagement of said one set of contacts upon rotation of said one lever in the opposite direction, said latch means preventing engagement of said other set of contacts, and means to trip said latch and permit engagement of said other set of contacts on further rotation of said one lever in said opposite direction.

8. A switch mechanism comprising a pair of levers, a pair of switch contacts on each lever, the contacts on one lever cooperating with the contacts on the other lever, rotation of one lever in one direction causing engagement of one set of contacts which in turn causes disengagement of the other set of contacts, latch means for causing disengagement of said one set of contacts upon rotation of said one lever in the oppo-

site direction, said latch means preventing engagement of said other set of contacts, means to trip said latch and permit engagement of said other set of contacts on further rotation of said one lever in said opposite direction, a condition responsive device for rotating said one lever back and forth, stops for limiting the amount of rotation of said one lever, and slip friction means connecting said one lever and said condition responsive device.

9. In combination, a switch arm, a pair of contacts mounted for cooperation with said switch arm, a condition responsive device for moving said arm in one direction to first engage one contact and then separate from the other, means on said switch arm causing movement of said other contact to prevent engagement with said switch arm until after the switch arm has separated from said one contact on movement of said switch arm in the opposite direction, stops for limiting the movement of said switch arm, and slip friction means connecting said condition responsive device to said switch arm.

10. In a device of the character described comprising in combination, a switch arm, a movable member, a pair of contacts carried by said movable member, a condition responsive device for moving said arm in one direction to first engage one contact and then separate from the other, means on said arm engaging and moving said movable member as said condition responsive device moves said switch arm in the opposite direction so as to prevent said switch arm from engaging said other contact, means for disengaging said first mentioned means from said movable member after said switch arm has disengaged said one contact to permit it to engage said other contact, and means for varying the time between the disengagement of said one contact and the engagement of said other contact by said switch arm.

11. A switching mechanism comprising a first movable member, a second movable member, a first switch formed by a first contact on said first member and a first contact on said second member, a second switch formed by a second contact on said first member and a second contact on said second member, means for moving said first member, means on said first member for moving said second member, stationary element causing said latter means to disengage said second member, means for adjusting one of said first contacts, means for adjusting one of said second contacts, and means for adjusting said stationary element.

12. In an automatic switching mechanism, a first switch comprising first and second contacts, a second switch comprising third and fourth contacts, an actuating member for moving said first and second contacts into engagement with each other, and mechanical connecting means by means of which said actuating member separates said third and fourth contacts, said mechanical connecting means including said first and second contacts, whereby the mechanical force for opening said second switch must pass mechanically through said closed first switch.

13. In an automatic switching mechanism, a first switch comprising first and second contacts, a second switch comprising third and fourth contacts, an actuating member for moving said first and second contacts into engagement with each other, and mechanical connecting means by means of which said actuating member separates said third and fourth contacts, said mechanical connecting means including said first and second contacts, whereby the mechanical force for opening said second switch must pass mechanically through said closed first switch as said actuating member moves in one direction, and means preventing the closing of said second switch until after said first switch has been opened as said actuator moves in the opposite direction.

FREDERICK D. JOESTING.
LESLIE H. MILLER.