June 14, 1955 E. M. SELZLER ET AL 2,710,520

LEVER OPERATED CHAIN LINK PULLER

Filed Nov. 30, 1951

Fig. 1.

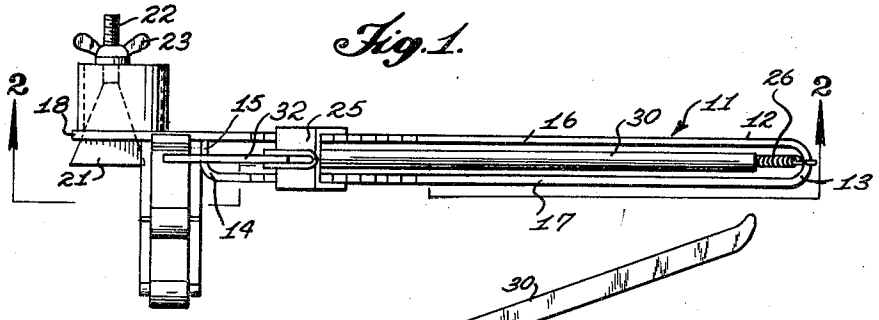

Fig. 2.

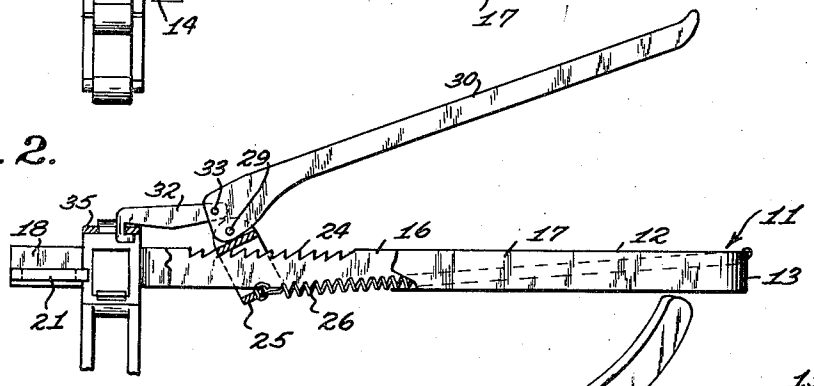

Fig. 3.

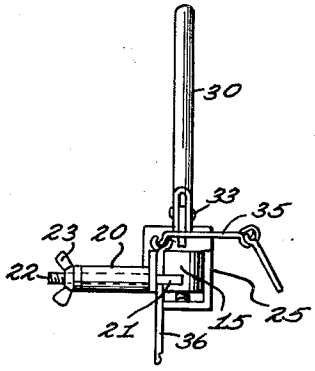

Fig. 4.

INVENTOR

EDWIN M. SELZLER

RAY D. MILES

BY

McMorrow, Berman & Davidson

ATTORNEYS

United States Patent Office 2,710,520
Patented June 14, 1955

2,710,520

LEVER OPERATED CHAIN LINK PULLER

Edwin M. Selzler and Ray D. Miles, Calgary, Alberta, Canada; said Selzler assignor to said Miles

Application November 30, 1951, Serial No. 259,064

2 Claims. (Cl. 59—7)

This invention relates to implements for repairing chains, and more particularly to a device for separating the links of chains of the type having rectangular links.

A main object of the invention is to provide a novel and improved link separating device for separating the links of chains of the type having rectangular links, said device being simple in construction, being easy to use, and enabling rectangular links to be separated with a small amount of effort and in a short time.

A further object of the invention is to provide an improved link pulling device for use in separating rectangular links, said device involving inexpensive components, being rugged in construction, being easy to manipulate, and allowing repairs of chains to be made in a speedy and efficient manner.

Further objects and advantages of the invention will become apparent from the following description and claims, and from the accompanying drawings, wherein:

Figure 1 is a top view of an improved link pulling device constructed in accordance with the present invention, shown engaged with a chain and arranged for separating the links thereof.

Figure 2 is a cross sectional view taken on the line 2—2 of Figure 1.

Figure 3 is a front end elevational view of the link pulling device of Figures 1 and 2.

Figure 4 is a perspective view of the link pulling device of Figures 1, 2 and 3, showing the device near the final position thereof in the process of separating a pair of adjacent links of a chain.

Referring to the drawings, the link pulling device is designated generally at 11 and comprises a main bar member 12 consisting of a strip of flat bar stock formed with a U-bend at 13 and formed with a rightangled bend adjacent one end thereof, at 14, defining a transverse abutment element 15 which engages and is rigidly secured to, as by welding or the like, the opposing side of the metal strip 12. The above described structure thus defines two arms 16 and 17 with the U-bend 13 defining the junction of said arms and the arms being connected by the transverse abutment element 15. Arm 16 includes an extension 18 projecting forwardly from the transverse abutment element 15. Said extension is formed with a longitudinal slot 19 and secured to said extension around the margins of said slot 19 is the flattened sleeve 20. Engaged in the slot 19 and extending through the sleeve 20 is the wedge-shaped plate 21 which is provided with the threaded end stud 22 on which is engaged the wing nut 23, said wing nut being engageable against the rim of the flattened sleeve 20 to exert axial pulling force on the wedge plate 21.

The top edges of the arms 16 and 17 are formed with the serrations 24, and slidably engaged on said arms is the rectangular ring member 25 whose upper portion may be tilted into locking engagement with the serrations 24, in the manner shown in Figures 2 and 4. Connecting the bottom portion of the ring member 25 and the upper edge of the U-bend 13 is the coiled spring 26 which

biases the ring member 25 into the aforesaid tilted locking engagement with the ratchet teeth 24.

The ring member 25 is formed with the upstanding lug portions 28, 28, and pivoted thereto at 29 is an elongated lever 30, said lever being formed with the parallel arms 31, 31 which are disposed on opposite sides of the lugs 28, 28, whereby the pivotal connection 29 may be made by means of a transverse pin or rivet. Designated at 32 is a hook member which is received at one end between the arms 31, 31 and is pivotally connected to the lever member by a transverse rivet or pin 33 extending through the arms 31, 31 and the end of the hook member 32, as shown in Figures 2 and 4, the transverse pin 33 being located above and spaced a short distance from the pivotal connection 29. The hook bar 32 is formed at its end with the hook 34 which is arranged to engage inside a chain link 35 in the manner shown in Figures 2 and 4.

A first rectangular link 36, adjacent to the rectangular link 35 to be pulled is first positioned between the wedge plate 21 and the transverse abutment element 15 and is rigidly clamped in this position by tightening the wing nut 23. The ring member 25 is manually moved to an advanced position on the arms 16 and 17 at which the hook element 34 of hook bar 32 may be engaged with the side arm of the link 35, and the ring 25 is allowed to lock itself by the action of the spring 26. The link 35 is of course arranged in the manner shown in Figure 4, wherein it is angled with respect to the clamped link 36 in such a manner as to allow it to be pulled laterally from pivotal engagement with said clamped link 36, the plane of the side arms of the link 35 being inclined so as to pass through the open portion of the pivot hook 37 of the clamped link 36. With the link 35 in this position, and engaged by the hook bar 32, the lever 30 is rotated toward the main bar member 12, as by exerting squeezing pressure on the lever and main bar member. This produces a high degree of tension in the hook bar 32, causing the link 35 to be moved laterally out of engagement with the hook 37 of the clamped link 36. The position of the ring 25 may be adjusted as required during the process of separating the links, the ring 25 being in each case locked in adjusted position by the tilting action produced by spring 26, whereby the ring 25 is biased to a locked stationary position on the main bar member 12. It will be apparent furthermore that the ring 25 will be pulled back by the force exerted by spring 26, causing the upward movement of the lever 30 relative to the main bar member 12 following each squeezing movement of the lever toward the main bar member, whereby the ring member 25 will be automatically retracted by the spring 26 and moved into proper position for the next squeezing stroke by merely releasing the lever 30 after each squeezing stroke exerted on the lever. The spring 26 tends to move the ring 25 rearwardly toward the U-bend 13 so that after each squeezing stroke of the lever 30 the lever is automatically elevated to its starting position by the tension exerted by spring 26 and the rearward movement of the ring 25 produced by said spring, as well as the engagement of the hook 34 with the side arm of the link 35 being pulled. It will thus be apparent that the ring 25 is automatically adjusted to a proper position on the arms 16 and 17 after each squeezing stroke of the lever 30 and is locked in said position during the subsequent squeezing stroke by the engagement of the top portion of the ring 25 with the ratchet teeth 24.

While a specific embodiment of an improved link pulling device for separating chain links of a rectangular type has been disclosed in the foregoing description, it will be understood that various modifications within the spirit of the invention may occur to those skilled in the

art. Therefore, it is intended that no limitations be placed on the invention except as defined by the scope of the appended claims.

What is claimed is:

1. A link pulling device for separating chain links of the rectangular type comprising a main bar member, abutment means on said main bar member intermediate the ends thereof, an adjustable wedge-shaped clamping member slidably received in one end of said main bar member adjacent said abutment means, and screw-threaded means for adjusting said clamping member to exert clamping force on a first link positioned between said clamping member and said abutment means, a ring member tiltably and slidably mounted on the other end of said main bar member, interengaging means on said main bar member and said ring member for locking said ring member to said main bar member responsive to tilting of said ring member on said main bar member, a lever pivoted to said ring member, spring means connected to the ring member and to said main bar member and biasing said ring member into tilted locking engagement, and a hook pivotally connected to said lever at a location spaced from the pivotal connection of the lever to the ring member, said hook being arranged to engage a second link and to pull said second link laterally away from said first link responsive to rotation of said lever toward said main bar member.

2. A link pulling device for separating chain links of the rectangular type comprising a main bar member, abutment means extending at right angles to a face of said main bar member intermediate the ends thereof,

an adjustable clamping member slidably received in said main bar member located in spaced relation to said abutment means, and screw threaded means for adjusting said clamping means to exert clamping force on a first link positioned between said clamping member and said abutment means, a ring member slidably mounted on said main bar member, serrations on said main bar member, an abutment on said ring member arranged to lockingly engage the serrations on said main bar member responsive to tilting of said ring member on said main bar member, a lever pivoted to said ring member, spring means connected to the ring member and said main bar member and biasing said ring member into tilted locking engagement with said serrations, and a hook pivotally connected to said lever at a location spaced from the pivotal connection of the lever to the ring member, said hook being arranged to engage a second link and to pull said second link laterally away from said first link responsive to rotation of said lever toward said main bar member, said hook member being movable in a plane parallel to said face of said bar member.

References Cited in the file of this patent

UNITED STATES PATENTS

277,894	Flynn	May 22, 1883
1,563,840	Dirks	Dec. 1, 1925
1,696,578	Lippert	Dec. 25, 1928
1,781,940	Anderson	Nov. 18, 1930
2,362,495	Mayberry	Nov. 14, 1944
2,379,001	Hage	June 26, 1945