Aug. 20, 1940. L. HINZ 2,211,777

BOWLING GAME

Filed April 7, 1938 3 Sheets-Sheet 1

Fig. 1.

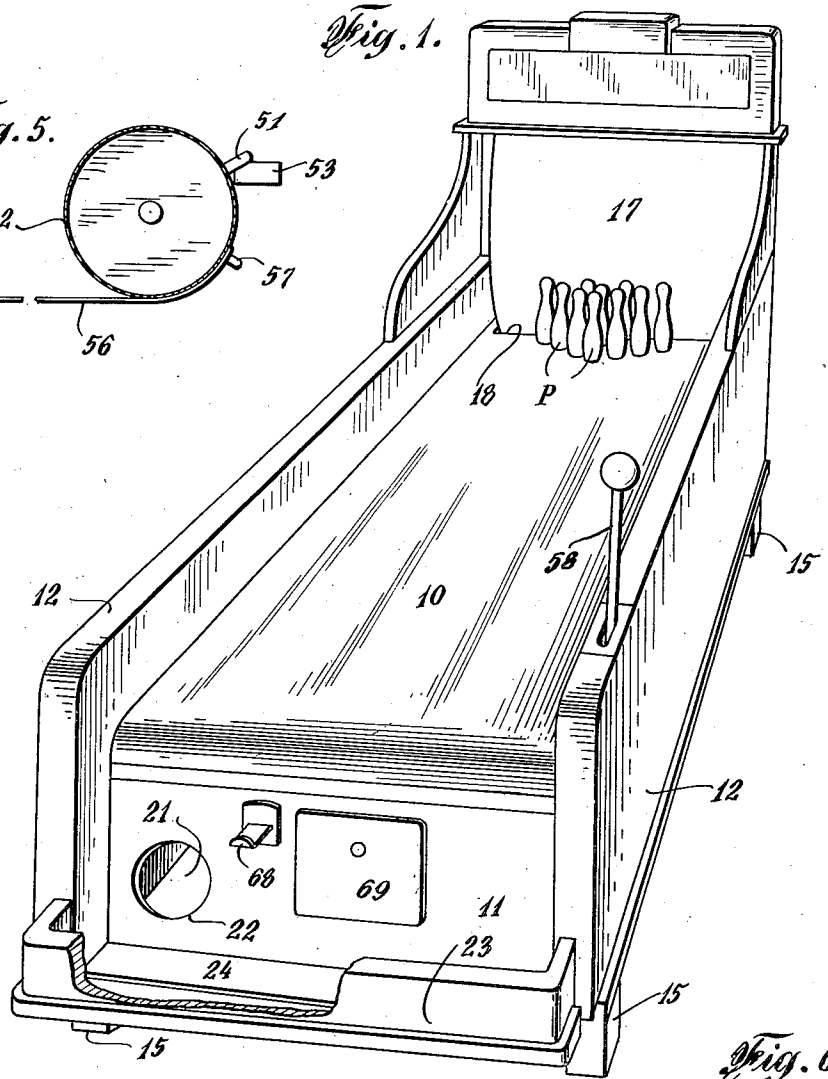

Fig. 5.

Fig. 4.

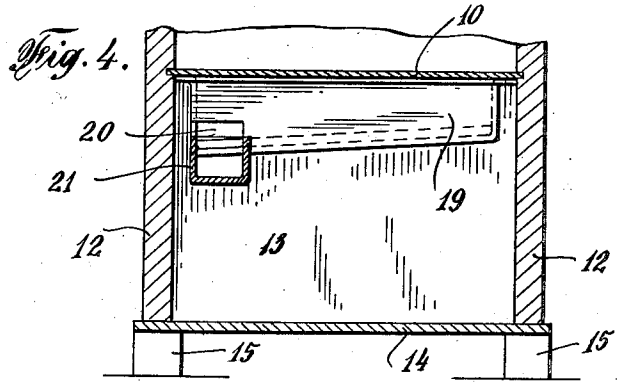

Fig. 6.

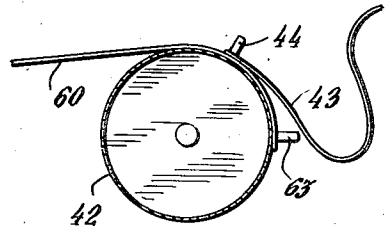

INVENTOR
Leo Hinz
BY John A. Seifert
ATTORNEY

Aug. 20, 1940. L. HINZ 2,211,777

BOWLING GAME

Filed April 7, 1938 3 Sheets-Sheet 2

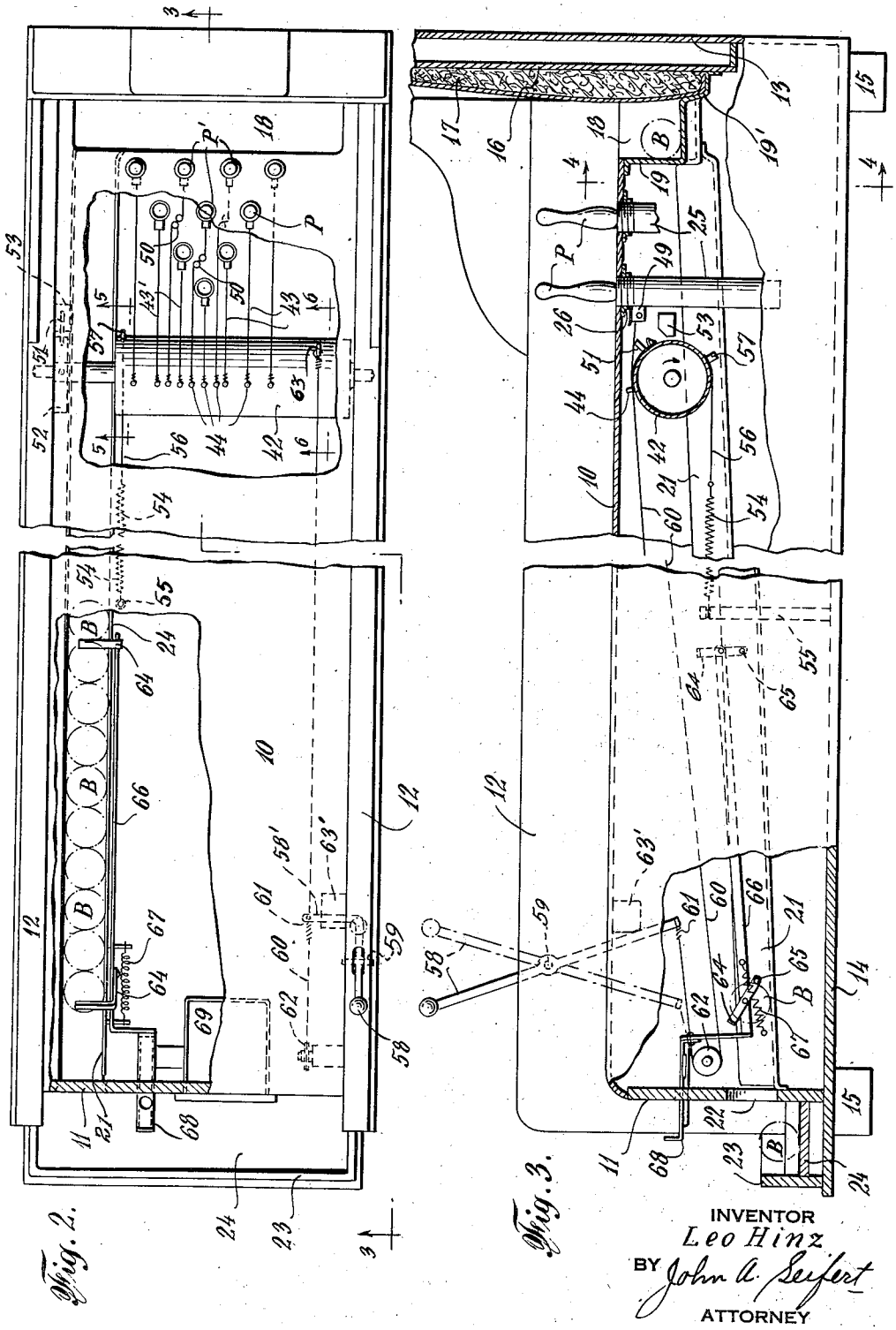

Fig. 2.

Fig. 3.

INVENTOR
Leo Hinz
BY John A. Seifert
ATTORNEY

Aug. 20, 1940. L. HINZ 2,211,777

BOWLING GAME

Filed April 7, 1938 3 Sheets-Sheet 3

Fig. 8.

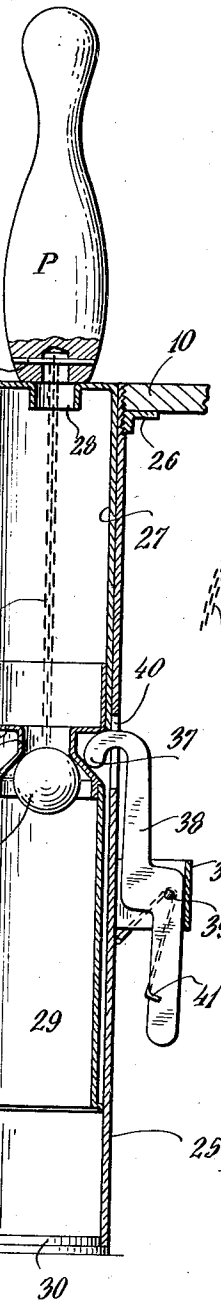

Fig. 7.

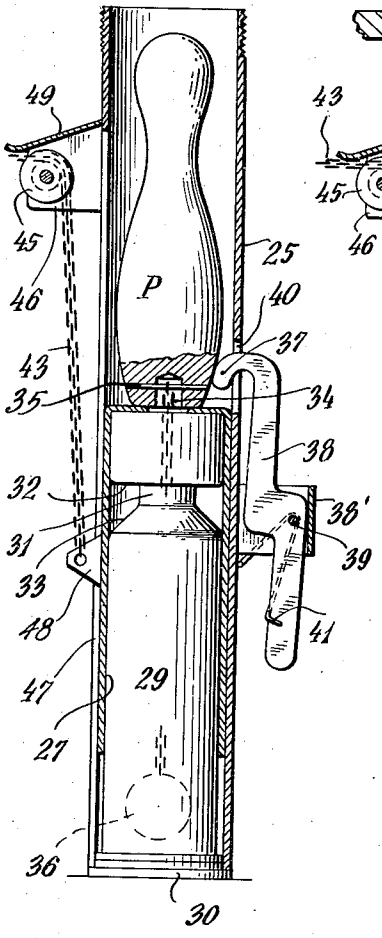

Fig. 9.

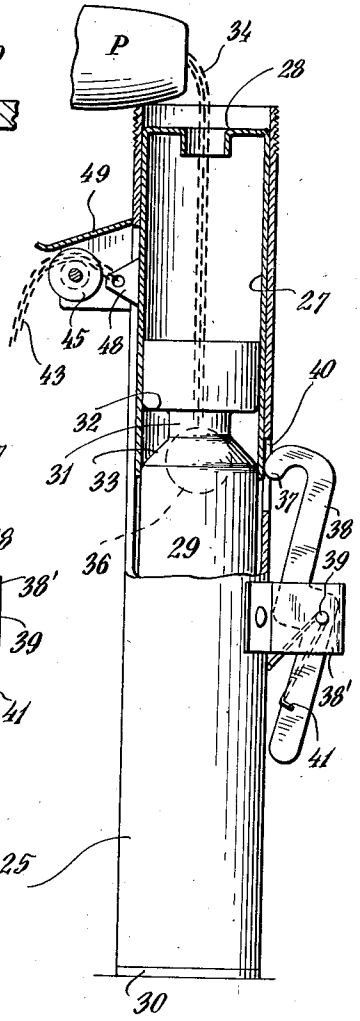

INVENTOR
Leo Hinz.
BY John A. Seifert
ATTORNEY

Patented Aug. 20, 1940 2,211,777

UNITED STATES PATENT OFFICE

2,211,777

BOWLING GAME

Leo Hinz, Newark, N. J.

Application April 7, 1938, Serial No. 200,583

7 Claims. (Cl. 273—45)

This invention relates to bowling game devices wherein pins are set and releasably supported in predetermined arrangement at one end of an alley board by means operative from the players' end of the alley board opposite to that at which the pins are set, and said means being operative by and when the pins are knocked over by a ball rolled along the alley board to clear the knocked over pins from the alley board.

It is an object of the invention to provide improved means to support and set the pins and clear knocked over pins from the alley board, that is simple and novel in construction and efficient in operation.

It is another object of the invention to provide a bowling game wherein the alley board constitutes the top of a casing with the sides of the casing arranged to extend above the alley board to retain the balls thereon, and the provision of a ball return means within the casing in communication with and to receive balls rolled along the alley board and entering an opening at the end of the board and terminating in an opening in the front wall of the casing in relation to a trough to receive the balls from said opening.

It is a further object of the invention to provide a bowling game of this character wherein the alley board constitutes the top of a casing and ball return means arranged within the casing, and means to store a predetermined number of balls in the ball return means and prevent delivery of balls from the ball return means and operative to permit of the delivery of the predetermined number of balls from the ball return means.

In the drawings accompanying and forming a part of this application,

Figure 1 is a perspective view of the bowling game showing an embodiment of the invention.

Figure 2 is a plan view with the alley board partly broken away to show the arrangement of the actuating means for the pin setting means as well as the means to store and permit the delivery of a predetermined number of balls from the ball return means.

Figure 3 is a side elevation, partly broken away and in section, the section being taken on the line 3—3 of Figure 2 looking in the direction of the arrows.

Figure 4 is a cross sectional view taken substantially on the line 4—4 of Figure 3 looking in the direction of the arrows.

Figure 5 is a sectional view taken on the line 5—5 of Figure 2 of a drum of the pin setting means.

Figure 6 is a sectional view taken on the line 6—6 of Figure 2 showing flexible means connecting the pins to the drum of the pin setting means and the drum to means to rotate the drum to actuate the pin setting means.

Figure 7 is a longitudinal sectional view of the pin setting means for one pin and showing the parts in normal position.

Figure 8 is a view similar to Figure 7 but showing the parts in position with the pin set and supported relative to the plane of the alley board and the means to releasably retain the pin in set position; and

Figure 9 is a view similar to Figures 7 and 8 showing the parts in position to release the retaining means from the pin setting and supporting means actuated by a pin that has been knocked over by a ball and permit the operation of the setting means to clear the pin from the alley board.

In the embodiment of the invention illustrated in the drawings there is provided an elongated rectangular casing having a top 10 to constitute the alley board, a front wall 11, sides 12 which project above the alley board to retain the balls thereon and forwardly of the front wall, as shown in Figure 1, a rear wall 13 extending upwardly above the alley board, and a bottom 14 extending forwardly of the front wall, as shown in Figures 2 and 3, and the bottom arranged with feet 15 at the corners. A cushion 17 is mounted on a support 16 arranged in spaced and parallel relation to the rear wall, the cushion extending below the top or alley board 10. The alley board terminates in spaced relation to the cushion providing an opening 18 between the rear end of the alley board and cushion for the passage of balls rolled along the alley board. A member 19 of ball return means is arranged relative to said opening in a plane below the alley board, such member being in the form of a chute comprising a member of angle form in cross section extending transversely of the casing with one angle portion abutting and extending downwardly from the end of the alley board and the other angle portion constituting the bottom of said chute member extending rearwardly and having a laterally offset marginal portion 19' abutting the support 16 below and forming a pocket for the engagement of the cushion as shown in Figure 3. The bottom wall of the member 19 inclines downwardly from the right hand to the left hand side of the casing, as shown in Figure 4, and has an opening 20 at the lower end in communication with a portion of the ball return chute of channel form

in cross section 21 declining from the member 19 to the front wall 11 of the casing and in communication at the delivery end with an opening 22 in the front wall, as shown in Figure 1, for the delivery therethrough of balls from the ball return. A channel member 23 is mounted on the portion of the bottom of the casing extending forwardly of the front wall, with the ends of said member arranged in abutting relation to the end of the projecting portions of the side walls of the casing with a plate 24 extending between said member and the front wall of the casing inclining from the left hand to the right hand side of the machine, as shown in Figure 1, and which plate is adapted to receive balls through the opening 22 from the ball return 21 and which balls roll to the right hand side of the casing due to the inclination of the bottom plate 24.

Means are provided to support the pins P below the alley board and to set and support the pins in the plane of the alley board, operative from the front or players' end of the alley board whereby a player may set the pins and thus eliminate the services of the usual pin boy, and said pin setting and supporting means being automatically operative to clear from the alley board pins which have been knocked over by a ball rolled along the alley. For this purpose the alley board adjacent the rear end is provided with a series of openings, and pin receiving housings, shown in the form of tubular members 25 open at one end, are supported below the alley board with the open end in register with an opening in the alley board, and shown as suspended at the open end from the alley board by flanged collars 26 secured at the flanges to the under side of the alley board with the openings in the collars in register with the openings in the alley board. The pin receiving housings 25 preferably have screw threaded connection with said collars whereby the housings may be adjusted relative to the alley board, as shown in Figures 3, 7, 8 and 9. The openings in the alley board and pin receiving housings are arranged in predetermined arrangement, in the present instance arranged to conform to the settings of the pins in the tenpin bowling game.

To support the pins within the housings and in set position in the plane of the alley board pin supporting means are provided, comprising members 27 each including a cylindrical body arranged at one end with a disk portion, which may be formed by flanging the end of the body inwardly, and said disk portion having an axial perforation with an annular flange projecting inwardly from said perfection, as at 28 (Figures 7, 8 and 9) and said members being slidable in the housings with the disk portion uppermost to be engaged by and support the pins. Tubular members 29 of slightly greater length than the pin supports 27 are mounted in the housings to have telescoping movement in the pin supports and movement with the pin supports in the housings 25. The lower end of the tubular members 29 is arranged with a reinforcing flange adapted to engage a closure member 30 at the lower end of the housings with the pins engaging in the housings, as shown in Figure 7. The tubular members 29 are arranged with an annular recess inwardly of the upper end, which recesses may be formed by annularly reducing the tubes, as at 31, the upper wall 32 of said recesses extending substantially at a right angle to the axis of the tubes and the lower wall 33 of the recesses spaced from the wall 32 and inclining outwardly. The pins are connected to the tubular members 29, which serve as counterweights for the pins, by a flexible member, shown as a chain 34, extending through the opening 28 in the pin support 27 and attached at one end within a socket in the bottom of the pins to a pin extending transversely of said socket, as at 35, the flexible member or chain being extended through the reduced portion of the counterweight tubes 29 and having an abutment attached to the end within the tubes 29, shown as a ball 36 of larger diameter than the passage through the reduced portion engaging at the inner side of the inclined wall 33 of the tube recess 31.

In the normal position of the parts the counterweight tubes 29 rest upon the closure 30 of the housings 25 with the pin engaging disk portion of the pin supports 27 engaging and resting upon the tubes 29 and the pins engaging upon the pin supports, as shown in Figure 7.

To set and support the pins in the plane of the alley board 10 the pin supports 27 with the pins thereon are moved upwardly in the housings until the abutments 36 engage the inclined wall 33 of the tube recesses 31. Levers 38 pivotally supported in U-shaped brackets 38' fixed on the housings, as at 39, are urged by a spring 41 in a direction to cause a lateral projecting portion 37 of a lever arm to extend into the housings through an opening 40 therein. As the pin supports 27 are moved upwardly they engage a nose at the inwardly curved end of the lever projection and actuate the lever to move the lever projection outwardly through the opening 40 and cause the nose to ride along the tubular wall of the pin support. As the pin supports 27 are moved upwardly in the housings to position with the lower end substantially flush with the right angle wall 32 of the recesses 31 in the counterweight tubes 29 the abutments 36 engage the inclining wall of the recesses 31 and by the continued upward movement of the pin supports the counterweight tubes are moved therewith until the recess wall 32 is flush with the end of the pin support when the nose 37 of the levers rides off from the pin support and engages in the annular recess 31 in the counterweight tubes 29 below said recess wall 32, and as the pin supports and counterweight tubes are relieved of the force to move them upwardly the end of the pin supports will engage and be supported upon the laterally projecting portion of the levers by the engagement of the other arm of the lever with the U-bracket, as shown in Figure 8 the counterweight tubes being suspended from and retaining the pins in upright position on the pin supports. A pin, as it is knocked over, as shown in Figure 9, through its connection with the counterweight by the chain 34 and abutment 36 will move the counterweight tube 29 upwardly into the pin support thereby causing the nose of the lever projection to ride along the inclined recess wall 33 out of the recess onto the cylindrical wall of the counterweight tube and position a curved wall portion of the nose relative to the end of the pin support, the support by the weight thereof riding down said curved wall and moving the lever outwardly against the action of the lever spring permitting the pin support to pass the nose of the lever projection and drop until the disk portion at the end engages the end of the counterweight tube, thereby adding the weight of the pin support to the counterweight tube, which is greater than the weight of the pin, the pin support dropping with the

counterweight tube to the bottom of the housing and drawing the pin through its connection with the counterweight tube into the housing, the parts assuming the position shown in Figure 7.

To actuate the pin setting means from the players' end of the alley board and simultaneously set all of the pins, or any of the pins that may have been knocked over and cleared from the alley board to position within the housings, there is provided a drum 42 rotatably supported within the casing to extend transversely thereof forwardly of the pin supports. Each pin support 27 is connected by a flexible member, such as a cable 43, to the drum, each cable being attached at one end to one of a series of pins 44 fixed in and projecting from the periphery of the drum, the pins being arranged in a spaced row extending longitudinally of the drum, as shown in Figure 2. The cables pass around grooved wheels 45 (Figures 7, 8 and 9) rotatably carried in bifurcated brackets 46 fixed to the exterior of the housings 25 adjacent the top thereof with the wheels rotating in the plane of a slot 47 extended inwardly from the lower end of the housings and the end of the cables attached to a perforated member in the form of an ear 48 fixed to and extending laterally from the pin supports 27 through the housing slot 47. A member 49 extending transversely of the top of the bifurcated bracket 46 and laterally beyond the same serves to guide the flexible members 43 from the drum to the wheels 45. The cables connected to certain of the pin supports rearwardly of other pins, as shown at P' in Figure 2, are guided to clear the cables and housings of forward pins and consisting of rollers, as shown at 50 in Figure 2, about which the cables pass. The drum is urged in the direction indicated by the arrow in Figure 3 with a pin 51 fixed in and projecting from the periphery of a disk 52 on the drum shaft in engagement with a stop member 53 of resilient material, such as rubber, fixed to the side of the casing, as shown in Figure 5, by a spring 54 attached at one end to a post 55 fixed in and extending upwardly from the bottom of the casing, the opposite end of the spring being attached to a cable 56 attached to a pin 57 fixed in and projecting from the periphery of the drum. In this movement of the drum the cables 43 connected to the pin supports are paid off from the drum and assume a slack position, as shown in Figures 6 and 9, to permit the pins, counterweight tubes and pin supports that may have been released from the supporting levers 38 to drop into the housings.

To set the pins the drum 42 is rotated in a direction reverse to that indicated by the arrow in Figure 3 by a lever 58 extended into and pivotally supported as at 59, in a recess extended into the top of the right hand side wall of the casing, as viewed in Figure 1, one arm of the lever projecting upwardly through the side of the casing and arranged with a hand grip, and the other lever arm having a lateral extension 58' (Figure 2) extended into the casing. The lever arm is connected to the drum by the flexible strand 60, such as a cable or wire, having a yielding connection with the lever extension 58', as at 61, and passed around a grooved wheel 62 rotatably mounted on the side wall of the casing, and thence passing over the top of the drum 42 and attached to a pin 63 fixed in and projecting from the periphery of the drum. The lever is normally urged to the dot and dash line position shown in Figure 3 through the action of the drum return spring 54. To rotate the drum to set the pins the lever is moved to the full line position, such movement of the lever being limited by the lever extension engaging a stop 63 of yielding material, such as rubber, fixed to the side of the casing.

As stated, the pins are knocked over by a ball B rolled along the alley board from the front end of the casing, the balls passing through the opening 18 into the member 19 of ball return means and from the latter into a portion 21 of the ball return. In playing the game a player is entitled to ten balls, and means are provided to retain said number of balls in the ball return 21 to be released therefrom and delivered into the ball receiving means 23, 24 and preferably released by a coin controlled means. For this purpose a pair of ball stops 64 of right angle form are pivoted at the extremity of one angle portion, as at 65, in predetermined spaced relation on the side of the portion 21 of the ball return with the other angle portion extending transversely above the ball return. The ball stops are pivotally connected intermediate the ends by a link 66 and normally urged by a spring 67 to the position shown in said Figures 2 and 3 with the forward stop engaging in front of the foremost ball and the other stop extending substantially at a right angle above the ball return and permitting the balls to pass below the same. To release the predetermined number of ten balls the stops are moved rearwardly so that the forward stop will extend transversely at a right angle above the ball return and the rear stop will engage in the rear of the tenth ball and forwardly of the successive following ball permitting the balls forward of the rear stop to pass from the ball return through the opening 22 and holding the successive balls against movement in the ball return. This adjustment of the ball stops is effected by means of a slide 68 slidable in the front wall, which may comprise a pair of members, one within and one without the casing to have movement relative to the first member and adapted to be operatively connected thereto by a coin, and the coin released and delivered through a chute into a coin box 69 extended into the casing through an opening in the front wall thereof. As shown, the inner member of the slide is connected to a part of the link extended upwardly and laterally into the path of the slide.

While I have described and illustrated one embodiment of my invention it will be obvious that various modifications may be made in the construction and arrangement of the parts without departing from the scope of the invention and the portions of the invention may be used without others and come within the scope of the invention.

Having described my invention I claim:

1. A bowling game, comprising a plurality of pins, an alley board having a series of predetermined spaced openings adjacent one end, housings having an open end supported below the alley board with the open ends in register with the openings in the alley board, supports for the pins slidable in the housings and normally assuming a position with the pins within the housings and adapted to be moved upwardly in the housings to set the pins in position to extend above the alley board, levers pivotally mounted on the housings to extend longitudinally of and have movement on an axis transversely of the housings, one arm of each lever having a laterally extending projection adapted

to move through an opening in the wall of the housing into and out of the housing, means to urge the levers to position with the projections extending through said opening into the housings above the pin supports in the normal position thereof, and said pin supports by the upward movement thereof to set the pins being adapted to engage said lever projections and actuate the levers to move the levers out of the housings, said levers when the pin supports are positioned to support the pins to extend above the alley board being adapted to engage below said pin supports and support the pin supports in said position, means to simultaneously actuate all of the pin supports to set the pins, and means connected to each pin and movable with the pins as they are set and supported by the set pins operative by pins that are knocked over to actuate the levers for the pin supports to release the pin supports of knocked over pins and permit said pin supports and said means to drop into the housings and draw the knocked over pins into the housings.

2. A bowling game, comprising a plurality of pins, an alley board having a series of predetermined spaced openings adjacent one end, housings having an open end supported below the alley board with the open end in register with the openings in the alley board, pin supports slidable in the housings normally assuming a position by gravity within the housings, means connected to the pin supports operative to simultaneously move all of the pin supports with the pins upwardly to position the pin supports in the plane of the alley board with the pins set upon the pin supports to extend above the alley board, levers pivotally mounted on the housings, one arm of each lever having a laterally extending projection arranged to move into and out of the housings through an opening therein by the movement of the levers, means to yieldingly urge the levers to position with the projection of the one arm engaging in the housings, and said projection of the arm of the levers in said position within the housing adapted to be engaged by the pin supports in their upward movement to set the pins and be moved out of the housings until the pins are set and then the projection is moved by the yielding means to engage below said pin supports and support the pin supports in pin supporting position, and counterweight means for the pins in the housings adapted to normally assume a position by gravity at the bottom of the housings and support the pin supports and pins thereon within the housings, and means to connect the counterweight means to the pins to permit of movement of the pins independent of the counterweights and move the counterweight means to predetermined position by the pins during the pin setting movement of the pins with the pin supports, said counterweight means being supported in said predetermined position by the pins when the pin supports are supported by the projection of the lever arms, and said counterweight means being operative by pins that are knocked over to move the lever arms out of supporting engagement with the pin supports and permit the pin supports to pass the lever projection and drop with the counterweights into the housings and draw the knocked over pins into the housings.

3. A bowling game as claimed in claim 2, wherein the means to move the pin supports with the pins upwardly in the housings comprises a rotatable drum, a series of cables attached at one end to the drum and the cables passed around wheels carried exteriorly of the housings and the opposite end attached to ears fixed to and extending laterally from the pin supports through a longitudinal slot in the housings.

4. A bowling game as claimed in claim 2, wherein the counterweight means and the connection thereof with the pins comprises tubular members slidable in the housings and each having an annular recess adjacent the upper end, and flexible means attached at one end to the bottom of the pins and at the opposite end to an abutment in said tubular members abutting the shoulders formed by the wall of the annular recess, and said laterally extending projections of the lever arms adapted to engage in said recesses in the tubular members below the pin supports and support the pin supports in position with the pins extending above the alley board, and said tubular members by the flexible members attached thereto and to the pins being adapted to be moved upwardly by knocked over pins, said recessed wall being arranged to ride along the projection of the lever arms and actuate the levers to permit said tubular members and pin supports to pass said projection of the lever arms and drop into the housings and draw the knocked over pins therein.

5. In a bowling game, a series of pins, an alley board having a series of predetermined spaced openings adjacent one end, pin receiving housings having an opening at one end supported below the alley board with the open end in register with the board openings, pin supports, each pin support including a tubular body having an axially perforated disk at one end slidable in the housings and adapted to assume a position at the bottom of the housings by gravity with the pins set upon the disk at the end thereof, tubular counterweights slidable in the pin supports of greater length than the pin supports and having an annular recess adjacent the upper end, means to connect the pins to the counterweights including flexible members extended through the perforation in the disks at the end of the pin supports and through the annular recessed portion of the counterweights and attached at one end to the bottom of the pins and at the opposite end to an abutment below the annular recessed portion of the counterweights, means connected to the pin supports operative to simultaneously move all of the pin supports with the pins and the counterweights through the flexible means connecting the same to the pins, upwardly in the housings to position with the pins extending above the alley board, and means movably carried by the housings and operative through an opening therein to releasably engage in the annular recesses in the counterweights below the pin supports and support the pin supports with the counterweights supported from the pins in the pin setting position of the pin supports, and said counterweights operative by pins associated therewith when said pins are knocked over to release said supporting means from the pin supports and permit the pin supports and counterweights to drop into the housings and draw said pins therein.

6. In a bowling game, a series of pins, an alley board having a series of predetermined spaced openings adjacent one end, housings having an open end supported below the alley board with the open end in register with the openings in the alley board, pin supports normally supporting the pins within the housings, means connected to

all of the pin supports operative to simultaneously actuate the pin supports with the pins to position the pin supports in the plane of the alley board and set the pins upon the pin supports to extend above the alley board, means movably mounted on the exterior of the housings to have movement into and out of the housings through an opening in the wall thereof, means to normally urge said movable means to position within the housings and adapted to be moved out of the housings by the pin supports as they are actuated to set the pins and automatically engaged below and support the pin supports in the pin setting position thereof, members slidable in the housings and relative to the pin supports, and means to connect said members to and permit of movement of the pins with the pin supports independent of said members and adapted to actuate said members to predetermined position as the pins are set and support said members in said position with the movable means supporting the pin supports in pin setting position and to be actuated in said position by associated pins as they are knocked over to release the movable supports from and permit the pin supports and said members to drop into the housings and cause said knocked over pins to enter into the housings.

7. In a bowling game, a series of pins, an alley board having a series of predetermined spaced openings adjacent one end, pin receiving housings having an open end supported below the alley board with the open end in register with the board openings, pin supports slidable in the housings including a tubular body having an axially perforated disk at the upper end for engagement of the pins, tubular members of greater length than and slidable in the body of the pin supports and in the housings below the pin supports, flexible means extended through the perforation in the disk at the end of the pin supports connecting the pins at the bottom to the tubular members, means connected to the pin supports operative to move the pin supports with the pins upwardly in the housings to position the pins to extend above the alley board and simultaneously move the tubular members upwardly to predetermined position and support the tubular members from the pins through the connection thereof with the pins, levers pivotally mounted on the exterior of the housings to have movement in a plane longitudinally of the housings, means to yieldingly urge the levers to position with one arm thereof extended through an opening in the housings and said end of the levers arranged to engage below and releasably support said pin supports in said position with the pins above the alley board, and the tubular members through the connection thereof with the pins adapted to be actuated by pins that are knocked over to release the levers from and permit the tubular members and pin supports to drop into the housings and cause the knocked over pins through the connection of the pins with the tubular members to enter into the housings.

LEO HINZ.