May 1, 1928. 1,668,356

P. L. CROWE

MACHINE FOR COMMINUTING COAL AND CREATING A DRAFT TO FEED THE COMMINUTED COAL

Filed Oct. 28, 1925

Fig. 1.

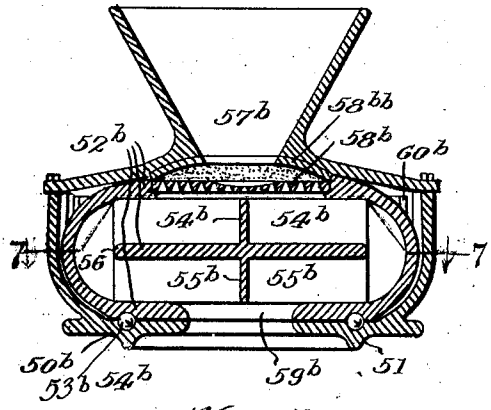

Fig. 2.

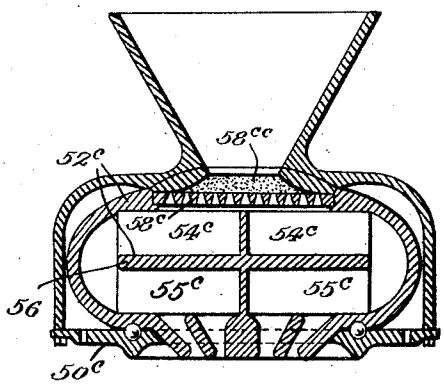

Fig. 3

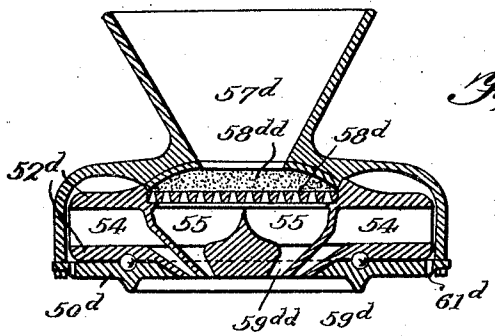

Fig. 4

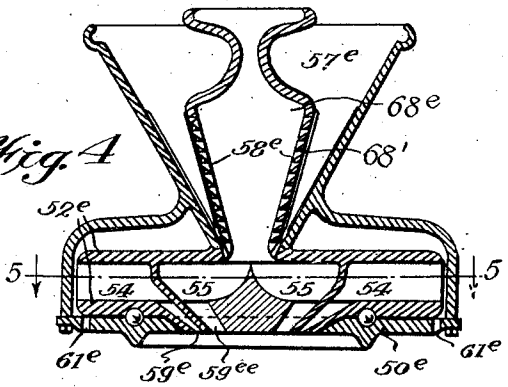

Fig. 5

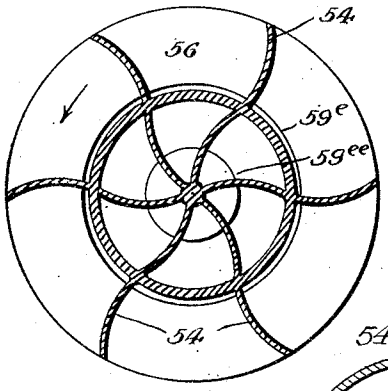

Fig. 6

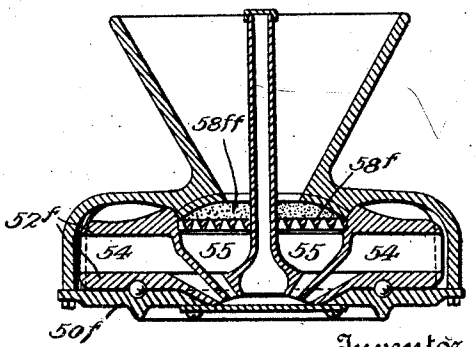

Fig. 7

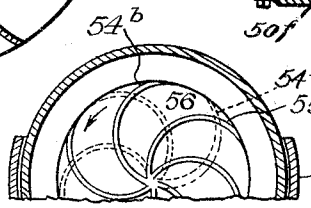

Inventor,
Paul L. Crowe.

Sterling P. Buck,
Attorney.

Patented May 1, 1928. 1,668,356

UNITED STATES PATENT OFFICE.

PAUL L. CROWE, OF BALTIMORE, MARYLAND.

MACHINE FOR COMMINUTING COAL AND CREATING A DRAFT TO FEED THE COMMINUTED COAL.

Application filed October 28, 1925. Serial No. 65,450.

This invention relates to grinding machines, and especially to a machine for comminuting coal and creating a draft to feed the comminuted coal. Still more specifically, the invention is a combination of grinding or comminuting elements and fans assembled in a unitary casing, frame or body which is provided with one or more outlets through which the fan or fans cause a draft or drafts of air to flow while having the comminuted coal commingled therewith; the primary purpose of such mixture of air and comminuted coal being to feed one or more stoves, furnaces or the like with combustible material in the presence of sufficient oxygen to effect a perfect and complete combustion of the comminuted combustible material.

Another purpose or object of this invention is to provide the grinding and draft-creating device in a compact and convenient arrangement so it can be seated on or secured to a stove or furnace, in the most appropriate and convenient relation for feeding such mixture of air and comminuted coal into such stove or furnace.

Other objects and important features will be pointed out or implied in the following details of description, in connection with the accompanying drawings in which:—

Figures 1, 2, 3, 4 and 6 are central, vertical, sectional views illustrating different forms of the invention. Figure 5 is a horizontal sectional view substantially along the line 5—5 of Figure 4. Figure 7 is a sectional view, partly broken away, the section being taken along the line 7—7 of Figure 1.

It will be observed that each of the vertical sectional views of the complete device, shows the same general combination in a broad sense, and at the same time, each shows one or more features of difference in the form or arrangement. Therefore, while parts which are identical will be designated by similar reference numbers, letters of reference are added to such numbers where the parts are functionally similar, but structurally different.

With the above system of indicating the different parts, it will be seen that the base members of Figures 1, 2, 3, 4 and 6 are indicated respectively at 50^b, 50^c, 50^d, 50^e and 50^f.

The respective rotors are indicated at 52^b to 52^f, respectively of the main central sectional views. Most all of the rotors are mounted to turn on an annular series of ball bearings indicated at 53^b in Figure 1. Each rotor includes a number of fan-blades indicated at 54^b and 55^b of Figure 1.

In each form of the invention, the fan-blades are integrally united with the rotor, so as to turn therewith, and each fan-blade is curved or set at such position with respect to the axis of rotation, that it effects a draft of air through the machine, as will be more clearly understood by a consideration of Figure 1, the construction and operation of which is described as follows:—

A horizontal partition 56, in the form of a disc, separates the upper fan-blades from the lower fan-blades, and the curved arrow of Figure 7 indicates the direction of motion of the rotor and its fan-blade. In view of the curvature and direction of rotation of the upper fan-blades, the air (which enters through the hopper 57^b and through a perforated grinder 58^b) is thrown outward past the outer ends of the fan-blades, into a space surrounding the partition or disc 56; and now, because of the opposite curvature of the fan-blades 56^b, the air is drawn inward from the outer ends of the lower fan-blades, and by the pressure thus created, is forced out through the outlet-opening 59^b. This operation continues to suck the air in through the hopper and apertured grinding member so long as the rotor is turning in the direction indicated. It should be understood that any appropriate means may be employed for rotating the rotor, for instance, gear-teeth 60^b are shown in Figure 1, and where no means is shown for rotating the rotor, it is to be understood that any appropriate means may be employed for rotating it.

Referring now to Figures 4 and 5, it will be seen that the arrangement of the fan-blades is similar to that of Figures 3 and 6, in the respect that these views show outer and inner fan-blades instead of the upper and lower ones previously described. Now considering the fan-blades to be turning in the direction of the arrow in Figure 5, it will be seen that they draw air in through one or more openings 61^c, discharging this air through an annular port or series of ports or outlets 59^e, thus tending to induce a flow of air through one or more outlets 59^{ee}, and

at the same time, the fan-blades 55 are sucking air through the hopper 57^e and through the perforated grinder 58^e, and forcing this air through the outlets 59^e. The operation just described is substantially the same in the forms shown in Figures 3 and 6.

For the purpose of distinguishing between two types of grinding mechanism, for comminuting the coal, I have adopted the terms "horizontal grinder" and "vertical grinder". These two types are shown in Figures 1 and 4, Figure 1 having the "horizontal grinder", and Figure 4 the "vertical grinder". The vertical grinder of Figure 4 comprises a hopper 57^e having a downwardly converging wall provided with ribs or grinding elements 57', and the number of grinding elements may be reduced or increased, according to the desires of the manufacturer. The rotor 52^e of Figure 4 includes a substantially frusto-conical grinding element 68^e provided with grinding ribs 68', this member 68^e being perforated at 59^e. These perforations are preferably inwardly diverging and downwardly inclined, so the comminuted particles of coal can not choke them. Although such openings 58^e are shown only in the sectional plane, it is to be understood that the entire annular surface of each of such grinding elements, in the several views, is provided with such perforations. It will be seen that the grinding face of each hopper, (in the several views including the vertical grinder) is downwardly converging with respect to the grinding face of the correlated grinding element of the rotor. In the vertical grinder, the grinding of the coal is effected within the hopper, and as the minute particles are dislodged from the lumps of coal, the air current (previously described) draws these particles through the perforated grinding element, and they pass downward and outward, with the air, through the outlets previously described; but the larger particles and lumps of coal gravitate into the narrower space between the grinders, so the grinding ribs continue to dislodge particles from such lumps, thereby continually producing and feeding the comminuted particles, with the air, through the respective outlets.

In the forms of the invention including the horizontal grinder, shown in Figures 1, 2, 3 and 6, lower and upper grinding members are arranged to converge towards their outer edges or peripheries, these being indicated by the following reference characters: 58^b and 58^{bb} in Figure 1; 58^c and 58^{cc} in Figure 2; 58^d and 58^{dd} in Figure 3; 58^f and 58^{ff} in Figure 6. In each of these forms where there is a lower and upper grinding member, the rotation of the lower grinding member, by its centrifugal force, when rotating, throws the lumps of coal outwards into the narrower space between the grinding discs, so the abrading or ribbed surfaces of the grinding discs comminute the coal, and the comminuted particles are caused, by gravity or the air-draft or both, to pass through the lower grinding disc, then through the chamber or chambers containing the fan-blades, and finally through the outlet or outlets, according to the specific form of burner to be fed thereby.

It should be understood that all forms have their fan-blades properly set, according to the direction of rotation of the rotors, respectively, for creating the air-drafts as described, and that there may be any appropriate number of the fan-blades of any appropriate shape, as shown in Figure 5, or at variance with such figures. It should also be understood that the vertical sectional views, as well as the others, do not purport to show all the fan-blades that are or might be employed. In other words, all views may be considered as somewhat conventional or diagrammatic. In this respect, however, attention is called to the fact that all stationary parts are sectioned in one direction (in the respective views), while all rotary parts are sectioned in the other direction, for clearly distinguishing between the stationary part and the rotary part of each machine. It should also be understood that the grinding ribs are necessarily exaggerated in these drawings (as well as some other dimensions), and that such grinding ribs may be substituted by or for the roughened or knurled surfaces indicated in Figure 1, at 58^{bb}; Figure 2, at 58^{cc}; Figure 3, at 58^{dd}; Figure 4, at 58^{ee}; Figure 6, at 58^{ff}; while most forms would comminute the material with relatively smooth and plane grinding surfaces.

Any appropriate means, as shown, or different from that shown, may be provided for securing the primarily separate parts of the respective stationary rotary parts of the respective machines.

It is not my intention to limit the invention to the forms here shown and described, for the invention is susceptible of various changes within the scope of the inventive ideas as implied and claimed.

What I claim as my invention is:

1. In a device of the character described, the combination of a hollow body including a hopper, and a rotor in said hollow body and including a part which is rotatable within the hopper and is provided with means to cooperate with the hopper for pulverizing coal or the like, means being provided for creating a draft of air through the hopper and for discharging a mixture of the air and pulverized coal or the like.

2. In a device of the character described, the combination of a hollow body including a hopper which is provided with coal grinding elements which are downwardly and inwardly converging, and a rotor in said

hollow body and including coal-grinding elements which cooperate with those of said hopper for pulverizing coal, means being provided to create a draft of air through said hopper and to discharge said air with the coal which is pulverized by said hopper and rotor.

3. In a device of the character described, the combination of two bodies, one of which is mounted to rotate with respect to the other, one of said bodies including a coal receptacle provided with downwardly converging grinding elements, the other of said bodies having a part within the coal receptacle and provided with coal grinding elements to cooperate with the first said coal grinding elements in pulverizing coal, the rotary one of these two bodies carrying a fan for causing an air current to pass through the coal receptacle and discharging a mixture of said air and pulverized coal.

4. The structure defined by claim 3, one of said bodies being provided with an outlet in its bottom for discharging the mixture of air and pulverized coal into a stove or the like through an opening in the top of the latter.

5. The structure defined by claim 3, said fan being under the outlet of said coal receptacle and operable to assist gravity in causing the pulverized coal to pass downward from the coal receptacle, the nonrotary one of said bodies having an outlet in its bottom for discharging a mixture of said air and pulverized coal therethrough and through an opening in the top of a stove or the like.

6. The structure defined by claim 3, one of said bodies having perforations interspersed with the said coal grinding elements for passing air and pulverized coal therethrough, this structure having an outlet with which said perforations are in open communication.

7. The structure defined by claim 1, the draft creating means including an air induction fan and an air forcing fan, substantially as described.

In testimony whereof I affix my signature.

PAUL L. CROWE.