PCT WORLD INTELLECTUAL PROPERTY ORGANIZATION
International Bureau

INTERNATIONAL APPLICATION PUBLISHED UNDER THE PATENT COOPERATION TREATY (PCT)

(51) International Patent Classification 5 : G06F 3/00, 3/033, G03H 1/22	A1	(11) International Publication Number: WO 94/25915
		(43) International Publication Date: 10 November 1994 (10.11.94)

(21) International Application Number: PCT/US94/04462

(22) International Filing Date: 22 April 1994 (22.04.94)

(30) Priority Data:
08/053,238 28 April 1993 (28.04.93) US

(71)(72) Applicant and Inventor: McPHETERS, R., Douglas [US/US]; Apartment 17F, 330 East 38th Street, New York, NY 10016 (US).

(74) Agents: TALBOT, C., Scott et al.; Howrey & Simon, 1299 Pennsylvania Avenue, N.W., Washington, DC 20004-2402 (US).

(81) Designated States: AT, AU, BB, BG, BR, BY, CA, CH, CN, CZ, DE, DK, ES, FI, GB, GE, HU, JP, KG, KP, KR, KZ, LK, LU, LV, MD, MG, MN, MW, NL, NO, NZ, PL, PT, RO, RU, SD, SE, SI, SK, TJ, TT, UA, UZ, VN, European patent (AT, BE, CH, DE, DK, ES, FR, GB, GR, IE, IT, LU, MC, NL, PT, SE), OAPI patent (BF, BJ, CF, CG, CI, CM, GA, GN, ML, MR, NE, SN, TD, TG).

Published
With international search report.
Before the expiration of the time limit for amending the claims and to be republished in the event of the receipt of amendments.

(54) Title: HOLOGRAPHIC OPERATOR INTERFACE

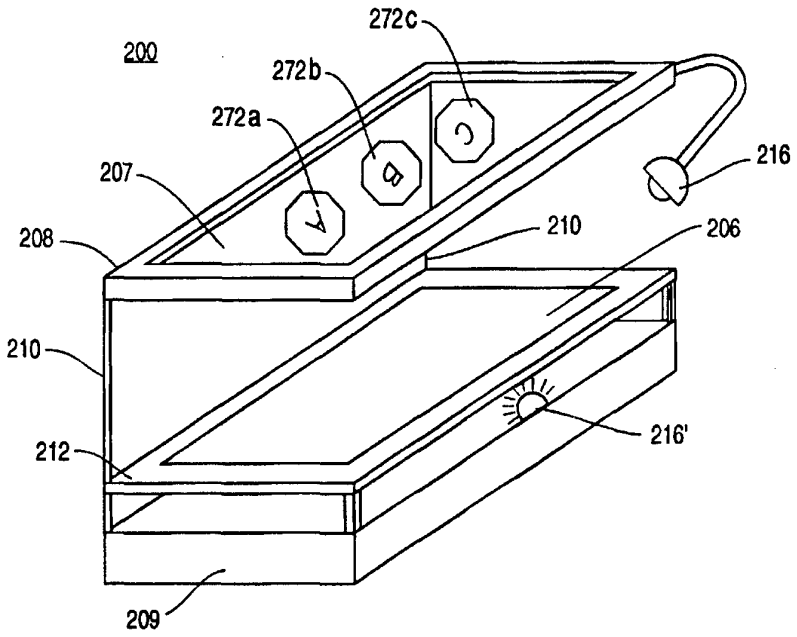

(57) Abstract

Operator input into one or more devices to be controlled by the operator (1) is provided through a holographic image (207) of the keys or other input devices customarily actuated to provide input data to the system wherein actuation of the holographic image (207) of the input devices is detected optically without tangible physical contact by the operator (1) with a solid control object or control surface.

FOR THE PURPOSES OF INFORMATION ONLY

Codes used to identify States party to the PCT on the front pages of pamphlets publishing international applications under the PCT.

AT	Austria	**GB**	United Kingdom	**MR**	Mauritania
AU	Australia	**GE**	Georgia	**MW**	Malawi
BB	Barbados	**GN**	Guinea	**NE**	Niger
BE	Belgium	**GR**	Greece	**NL**	Netherlands
BF	Burkina Faso	**HU**	Hungary	**NO**	Norway
BG	Bulgaria	**IE**	Ireland	**NZ**	New Zealand
BJ	Benin	**IT**	Italy	**PL**	Poland
BR	Brazil	**JP**	Japan	**PT**	Portugal
BY	Belarus	**KE**	Kenya	**RO**	Romania
CA	Canada	**KG**	Kyrgystan	**RU**	Russian Federation
CF	Central African Republic	**KP**	Democratic People's Republic of Korea	**SD**	Sudan
CG	Congo			**SE**	Sweden
CH	Switzerland	**KR**	Republic of Korea	**SI**	Slovenia
CI	Côte d'Ivoire	**KZ**	Kazakhstan	**SK**	Slovakia
CM	Cameroon	**LI**	Liechtenstein	**SN**	Senegal
CN	China	**LK**	Sri Lanka	**TD**	Chad
CS	Czechoslovakia	**LU**	Luxembourg	**TG**	Togo
CZ	Czech Republic	**LV**	Latvia	**TJ**	Tajikistan
DE	Germany	**MC**	Monaco	**TT**	Trinidad and Tobago
DK	Denmark	**MD**	Republic of Moldova	**UA**	Ukraine
ES	Spain	**MG**	Madagascar	**US**	United States of America
FI	Finland	**ML**	Mali	**UZ**	Uzbekistan
FR	France	**MN**	Mongolia	**VN**	Viet Nam
GA	Gabon				

Holographic Operator Interface

Background of the Invention

The present invention relates generally to a holographic operator interface to electronic or electromechanical devices such as data processing units or computers and, more particularly, to a holographic operator interface where there is no tangible physical contact between the operator and the control elements of the operator interface as the input devices are holographic images of the keys or other customarily touch-activated tangible input devices. Operator interaction is detected through electromagnetic or other means, thereby obviating the need for direct physical contact with a solid input object or surface.

There are many methods and devices available for entering data and commands into computers, such as pushbuttons, keyboards, trackballs, mice and light pens. All of these input devices share a common disadvantage in that they require tangible physical contact by the user of the computer or electronic device. The repetitive physical effort required to operate solid keyboards has been shown to cause or promote physical maladies, including carpal tunnel syndrome. Even where only one person uses the input device it is inherently subject to wear and damage because of the mechanical aspects of these input devices. Where many individuals use an input device throughout the day, such as in a bank's automated teller machine, problems of normal wear and tear are exacerbated by constant use, a potentially inhospitable environment and hygiene concerns. These hygiene concerns are particularly relevant in sterile environments such as a hospital operating

room where it is desirable to control electronic equipment without physical contact that may compromise sterility. These standard input devices share an additional disadvantage in that one input device cannot be commonly used to control several electronic devices without physically disconnecting and reconnecting the input devices, thereby necessitating the use of several similar input devices rather than one remotely connected input device. Additionally, changing the notation or arrangement of the input devices is generally impractical because of the problems inherent in replacing keycaps or altering a keyboard arrangement.

Electromechanical keyboards and keypads are the most common operator interface for inputting data and commands into electronic devices such as computers. However, these devices are unsuitable for certain environments and it is considered desirable to reduce the use of electromechanical relays because of their inherent problems. Furthermore, they have been shown to cause or promote the aforementioned physical maladies in part because they require the repeated application of physical pressure. Previous attempts to provide operator input without using electromechanical devices have included a "Keyboard With Immobile Touch Switches," U.S. Patent No. 3,372,789, issued March 12, 1968 to H. Thiele et al. and a "Motionless Data Input Key," U.S. Patent No. 3,340,401, issued September 5, 1967 to J. E. Young. The devices disclosed in these patents, while eliminating the need for electromechanical relays, still require the user to physically touch the input device to actuate it.

Although holographic images are used in other operator interfaces, they are used as visual output devices (displays) rather than as input devices. Head-up displays such as those used in aircraft or the "Holographic Head-Up Control Panel" described in U.S. Patent No. 4,818,048 issued April 4, 1989 to G. Moss exemplify this use of holograms in output devices. In these implementations of operator interfaces the holographic image provides information and feedback responsive to the operator's actuation of solid controls separate and distinct from the holographic image.

This invention is directed toward providing a means by which an

operator may control one or more devices without touching a solid control object or surface while still interacting with familiar controls that are visually perceived, such as a keyboard.

Summary of the Invention

The present invention provides an interface between an operator and a device to be controlled. The operator interface includes an input interface that permits the operator to input data and commands into a device such as a computer without requiring physical contact. The input interface includes a holographic image of a physical input device -- the operator activates the input interface without physically touching a solid control surface. The input interface is activated when the user passes a finger or pointer through the holographic image of a key or other input device. Operator actuation is detected through electromagnetic radiation or sound energy, allowing the operator to use familiar key controls while avoiding physical contact.

The input interface incorporates a three-dimensional holographic image of a keyboard or other input device projected from a hologram of the input device. The hologram may be either a reflection hologram or a transmission hologram, the type of hologram used dictating the relative position of the light used to project the three-dimensional holographic image.

The operator interface may optionally include an output interface, such as a conventional video display used in personal computers.

Brief Description of the Drawings

FIG. 1 is a schematic functional representation of a holographic operator interface according to the principles of the invention.

FIG. 2 is a schematic representation of an image generator used in the operator interface of FIG. 1.

FIG. 3 is a schematic representation of a first embodiment of an input actuation detector used in conjunction with the image generator of FIG. 2.

FIG. 4 is a schematic representation of a second embodiment of an

input actuation detector.

FIG. 5 is a schematic representation of the relative position of a hologram, a holographic image, and an illumination source for use in the image generator of FIG. 2.

Detailed Description

FIG. 1 schematically illustrates a holographic operator interface 2 between an operator 1 and a device 3 to be controlled by the operator 1. Device 3 may be an electronic device such as a computer or any other device into which it is desired to provide user input through a keyboard, keypad or other input device and which may provide visual or other output to the operator. Such devices can include automatic teller machines, electronic cash registers, personal computers, calculators, data entry keypads, system controls, weapons systems, musical instruments, electronic testing equipment, video recorders, televisions, telephones and switchboards.

The operator interface 2 includes an input interface 20, which includes a holographic image generator 200, an actuation detector 300, and a signal generator 400. The operator interface 2 may optionally include an output interface 25, which can include a display 500.

The holographic image generator 200 generates a holographic image of an input device such as a keyboard. The operator can see the image of the input device and actuate the input interface 20 by penetrating the image with a finger or other pointer. Actuation detector 300 senses the operator's physical indications, determines which part of the input device image the operator actuated, and conveys that information to the signal generator 400. Signal generator 400 incorporates the means needed for communication between actuator detector 300 and the device 3. Signal generator 400 provides input signals to the device 3 which may, for example, correspond to standard input signals from electromechanical keyboard or keypad input devices. Thus, the operator's manipulation of the image generated by the image generator 200 is ultimately conveyed by signal generator 400 to the device 3 that the operator wishes to control

Each of the functional components of the operator interface 2 may be physically separated from each other and from the device 3 -- the image generator 200 need only generate an image that is physically accessible to the operator 1, and the display 500 need only be visible to the operator. Thus, the image generator may be physically separated from the actuation detector 300, so that the sensing of the operator's manipulation of the image may be done remotely. The actuation detector may be physically combined with or separated from the signal generator 400, which in turn may be combined with or separated from the device 3. The display 500 may be combined with or separated from any of the other components. Information to be communicated between the actuation detector 300, signal generator 400, and device 3, and between device 3 and display 500, may be communicated via any suitable data link (indicated in FIG. 1 as links 305, 405, and 505). Each such data link may include any suitable means for communicating data, such as a multi-conductor wire or an infra-red or radio frequency link of the kind commonly used for microcomputer keyboards and entertainment device remote controls.

As illustrated schematically in FIG. 2, image generator 200 provides an intangible input device in the projected holographic image 207 of an input device recorded in hologram 206. The image may include images of individual keys 272a, 272b, and 272c. Hologram 206 is disposed on body 209 (such as by mounting on a support 212, which may be transparent if a transmission hologram is used). Holographic image 207 is projected above hologram 206 and body 209 such that holographic image 207 appears approximately coplanar with an image frame 208 supported on the mounting body 209 by suitable supports 210. The image frame 208 may provide a wrist rest for the operator, and may support an upper illumination source 216. Alternatively, a lower illumination source 216' may be used, as described below. Mounting body 209 may also house the actuation detector 300 and/or the signal generator and their associated electronics, a power supply, and any other related equipment.

As is well known in the art, a hologram is a photographic record of

the interference pattern formed by two light beams, a reference beam directed toward the photographic film and an object beam reflected from the object to be shown in the hologram. When a hologram is illuminated by a reconstruction beam, it produces a real image (which appears to be between the plane of the hologram and the viewer) and a virtual image (which appears to be behind the plane of the hologram). As illustrated in FIG. 5, it is preferred that the holographic image 207 produced from the hologram 206 by reconstruction beam 266 appear to the operator (the operator's eye being represented schematically in FIG. 5 at 10) to be located between the operator and the hologram 206, so that the operator can "touch" the holographic image 207 without encountering the hologram 206. Thus, it is preferred that the holographic image 207 be a real image.

However, with a conventionally-developed hologram, the real image appears to be inverted (i.e. a mirror image) -- it is thus pseudoscopic. This may be undesirable for an image of an operator interface such as a keyboard. However, a true, or orthoscopic, real image may be produced by a process of double inversion whereby a second hologram is made of the pseudoscopic real image of a hologram of an actual object. The resulting real image from the second hologram, being a pseudoscopic image of a pseudoscopic image from the first hologram, is therefore orthoscopic. Hologram 206 is preferably formed pursuant to this procedure so as to create an orthoscopic image of the input device. The procedures for forming such a hologram can be found in known reference works such as "Optical Holography" by Collier et al., Academic Press, New York (1971), "Three-Dimensional Imaging Techniques" by Okoshi, Academic Press, New York (1976), and "Optical Holography: Principles, Techniques and Applications" by Hariharan, Cambridge University Press, Cambridge (1984).

Holographic image 207, projected from hologram 206, is an orthoscopic real image of the input device and is disposed so as to be approximately coplanar with image frame 208. As the artisan will recognize, if hologram 206 is a transmission hologram, the illumination source 216' providing the reconstruction beam 266 for holographic image 207 is

positioned behind hologram 206 relative to the operator, whereas if hologram 206 is a reflection hologram the illumination source 216 is positioned on the same side of the hologram as the operator. As is well known in the art, conventional holograms require a coherent reconstruction beam, while other types of holograms are viewable in incoherent white light. Thus, if the hologram 206 is a white-light hologram, the illumination source 216 may be a source of incoherent light, such as a halogen lamp, while if the hologram 206 is a conventional hologram, the illumination source 216 must be a source of coherent light, such as a laser.

The placement of the illumination source 216 may also vary with the physical configuration of the input interface 20 and the environment in which it is operated. For example, if the image generator 200 is to be stationary (as, for example, if it is used with a bank's automated teller machine), the illumination source may either be mounted to the base 209 or may be mounted remotely from the base, such as on the device 3, or on a nearby but separate structure. If the image generator is to be movable, the illumination source 216 should be mounted in a fixed relationship to the image generator so that the incident angle of the reconstruction beam on the hologram remains fixed.

Techniques for generating a holographic image from either a transmission or reflection hologram are well known in the art and can be found, for example, in the above listed reference works. Techniques for creating and viewing rainbow holograms are described in "White Light Transmission/Reflection Hologram Imaging" in "Applications of Holography & Optical Data Processing" by Benton, ed. Marom et al., Pergamon Press, Oxford (1977).

The operator 1 is thus presented with a holographic image 207 of an input device. The operator interacts with the image by passing a finger or pointer through the apparent plane of the image 207. Detection and interpretation of operator interaction with the holographic image 207 is performed by the actuation detector 300. As described above, the actuation detector may be connected to, or may be physically separated from, the

image generator 200. In the preferred embodiment, the image generator 200 and actuation detector 300 are physically integrated.

As illustrated in FIG. 3, the actuation detector 300 may consist of an optical detection matrix 311 integrated with image frame 208. Image frame 208 is formed as a rectangular polygon approximately coplanar with and peripherally encompassing holographic image 207. Optical detection matrix 311 consists of photoemitters 312 and corresponding photoreceptors 313 arranged such that two or more mutually perpendicular detection beams 314 and 315 are blocked when the operator actuates a unique element (such as individual keys 272a, 272b, or 272c) of the input device by "touching" the corresponding portion of the holographic image 207. The identity of the intersected detection beams can be correlated with the key that has been actuated by any suitable technique, such as be reference to a look-up table. Such an optical detection matrix (but using a physical keyboard) is described in U.S. Patent No. 4,884,073 issued November 28, 1989 to A. Souloumiac.

In an alternative embodiment, actuation detector 300 may incorporate a laser measuring device utilizing measuring techniques such as the real-time three dimensional optical scanning device described in the "3-D Active Vision Sensor," U.S. Patent No. 4,593,967, issued June 10, 1986 to P. Haugen, the disclosure of which is hereby incorporated by reference. This technique involves measuring the distance to an object (or a series of points on an object) by reflecting a laser beam from the object. As illustrated in FIG. 4, such a laser scanning device 350 thus detects operator interaction by scanning the region bounding the holographic image 207 (as defined, for example, by the image frame 208) with a scanning laser beam 360 in a raster pattern. The scanning beam 360 will be reflected by any physical object in its path, and a reflected beam 370 will be returned to the laser scanner 350. As described in Haugen, the location of the reflecting object can be determined by the relative angle between the beams.

The laser scanner 350 may be configured to disregard any reflected beam 370 from an object that is nearer to the operator than the plane of the image 207. However, the presence of a physical object (such as the

operator's finger, indicated in FIG. 4 as 11) sensed by the laser scanner 350 that is closer to the scanner than the plane of the image would be interpreted as an operator interaction with the holographic image. The position of the object would then be correlated with the key (such as 272a) that has been actuated by any suitable technique, such as described above for the optical detection matrix 311.

As the artisan will recognize, the rate at which the laser scanner 350 scans the plane of the holographic image 207 should be sufficiently high to ensure that the momentary intrusion of a pointer or the operator's finger through any virtual key will be detected. Similarly, the relative orientation of the laser scanner and the holographic image 207 are important. The laser scanner will be most readily able to determine the location of the intruding physical object if the plane of the holographic image 207 is most nearly perpendicular to the scanning beam 360 from the actuation detector 300. The location of the object within the plane of the image cannot be readily determined if the plane of the image is parallel to the scanning beam.

The laser scanner 350 may be disposed either adjacent the image generator (such as on the base 209) or may be remote from the image generator (such as on the device 3). In the latter case, if the position of the image generator 200 will not be fixed relative to the laser scanner 350, some means should be provided for defining the relative location and orientation of the holographic image 207 and the laser scanner so that the laser scanner can determine when a object has penetrated the plane of the image and which portion of the image has been penetrated.

One suitable technique is to use the image frame 208 as a reference frame. Again, image frame 208 is formed as a rectangular polygon approximately coplanar with and peripherally encompassing holographic image 207. The frame is readily detectable by the laser scanner, provided that the frame is within a region to be scanned by the detector. Since the dimensions of the frame are known, the orientation of the frame relative to the beam of the detector can be determined. The location of any physical intrusion through the plane of the image can then be determined and

correlated with the key actuated by the operator. The scan rate of the detector and the region it is to scan should be selected so that the image frame 208 will not be moved outside of the scan region between scans for an anticipated movement velocity.

Other suitable techniques for detecting operator actuation of the image 207 include ultrasonic or infrared ranging techniques (such as are used in autofocus cameras), or other laser ranging techniques such as those described in "Interferometric Metrology: Current Trends and Future Prospects" by P. Hariharan at Proceedings of the SPIE, vol. 816, pp. 2-18, Bellingham, SPIE (1987).

Operator interface 2 may be used to provide input to several devices. Hologram 206 may be interchanged on image generator 200 so as to generate holographic image 207 particularly corresponding to a particular device to be controlled. Actuation detector 300 and signal generator 400 may be integrated into each device 3 or designed so as to correctly interpret a plurality of input devices. As the artisan will recognize, alternative permutations may be utilized to provide multiple inputs to multiple devices 3 from a single operator interface 2.

The operator interface 2 may optionally include an output interface 25, which, as described above, may include a display 500. The display 500 may be a conventional video display device, such as a liquid crystal display (LCD) of the type commonly found in personal computers and portable video games. The video display may be mounted to the device 3 or may be physically separated from it. For example, where proximate operator feedback in a conventional relationship with the operator input device is desired, the display may be mounted on the body 209 of the image generator 200, which may be physically separated from, and movable relative to, the device 3. In either arrangement, video signals to the display 500 would be transmitted from the device 3 via data link 505.

WHAT IS CLAIMED IS:

1. A holographic operator interface for supplying input signals to a device to be controlled by the operator comprising:

means for generating a holographic image of an input device;

means for detecting operator interaction with said holographic image; and

means for supplying an input signal to the device based on the detected operator interaction.

2. The holographic operator interface according to claim 1, wherein said image generating means comprises:

a mounting body;

a hologram of said input device connected to said mounting body; and

means for illuminating said hologram to produce a holographic image of said input device at a predetermined location spaced from said mounting body.

3. The holographic operator interface according to claim 2 further comprising an image frame mounted to said mounting body and peripherally encompassing said holographic image.

4. The holographic operator interface according to claim 3 wherein said image frame comprises a rectangle approximately coplanar to said holographic image of said input device.

5. The holographic operator interface according to claim 4 wherein said means for detecting actuation of said holographic image comprises an optical detection matrix incorporated into said image frame.

6. The holographic operator interface according to claim 3 wherein said means for sensing interaction with said holographic image comprises a three-dimensional active vision sensor.

7. The holographic operator interface according to claim 2 further comprising an output interface, said output interface including a video display device.

8. A method of interfacing an operator to a device to be controlled by the operator comprising the steps of:

projecting a holographic image of an input device; and

detecting and identifying operator interaction with said holographic image of said input device.

9. The method of claim 8 wherein said input device comprises a keypad.

10. The method of claim 8 wherein said step of generating a holographic image of said input device comprises generating a projection from a transmission hologram.

11. The method of claim 8 wherein said step of generating a holographic image of said input device comprises generating a projection from a reflection hologram.

12. The method of claim 8 wherein said step of detecting and identifying operator interaction comprises scanning said holographic image of said input device with a three-dimensional active vision sensor.

13. The method of claim 8 further comprising the step of encompassing said holographic image of said input device by an approximately coplanar polygonal image frame.

14. The method of claim 13 wherein said step of detecting and identifying operator interaction with said holographic image comprises scanning said holographic image of said input device with a three-dimensional active vision sensor.

15. The method of claim 13 wherein said step of detecting and identifying operator interaction with said holographic image comprises detecting physical intrusions into a matrix of intersecting photodetection beams.

16. The method of claim 8 further comprising the step of providing visual feedback to said operator responsive to said detection and identification of operator interaction with said holographic image.

17. A method of interfacing an operator to a plurality of devices to permit the operator to provide input to one or more of said plurality of devices comprising the steps of:

generating a holographic image of an input device;

detecting and identifying operator interaction with said holographic image; and

supplying input signals to one or more of said plurality of devices responsive to said detected and identified operator interaction with said image.

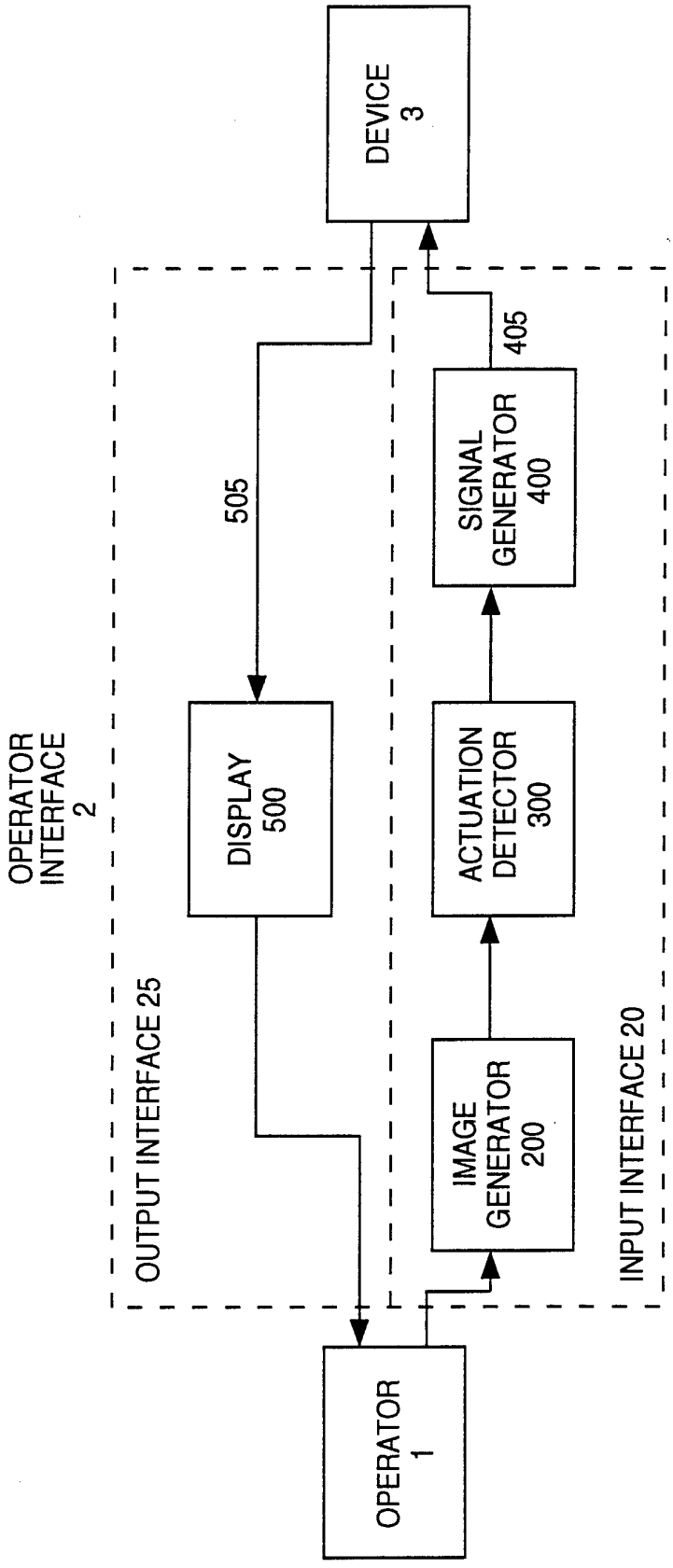
DEVICE
3
405
SIGNAL
GENERATOR
400
505
OPERATOR
INTERFACE
2
DISPLAY
500
ACTUATION
DETECTOR
300
OUTPUT INTERFACE 25
IMAGE
GENERATOR
200
INPUT INTERFACE 20
OPERATOR
1

FIG. 1

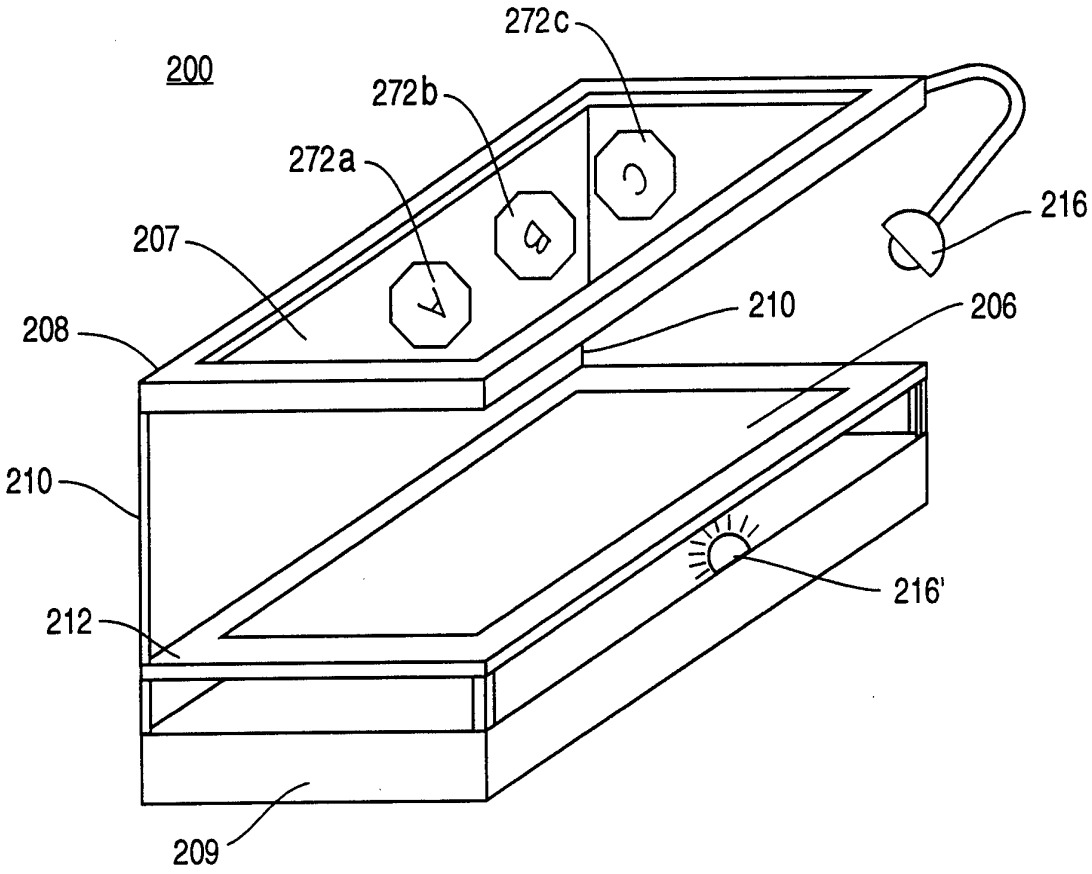

FIG. 2

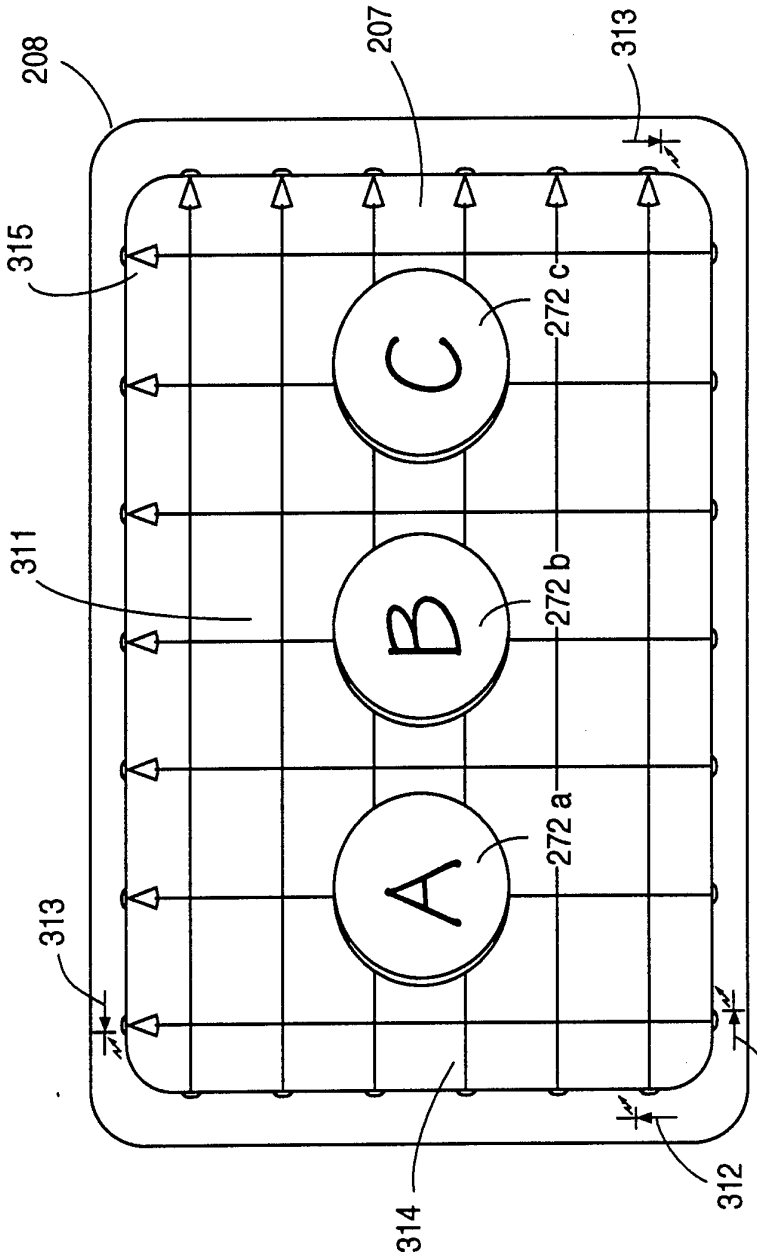

FIG. 3

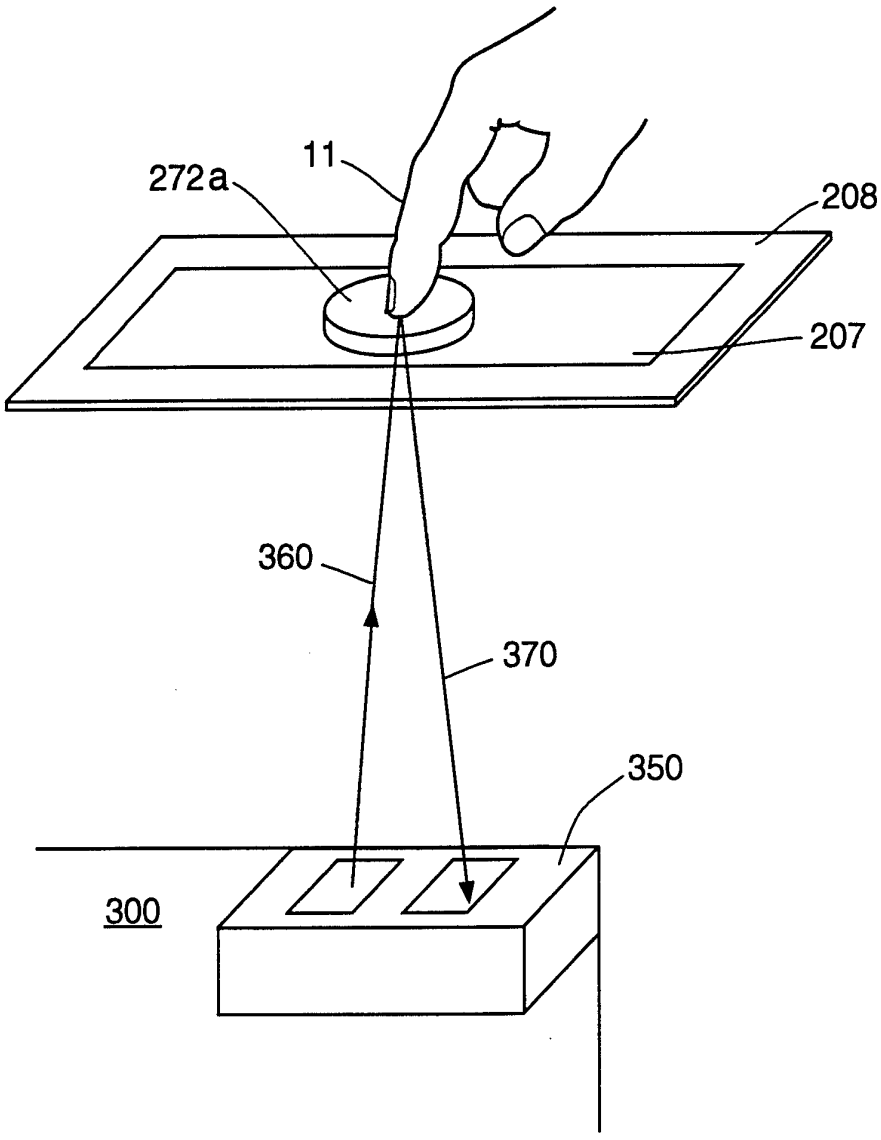

FIG. 4

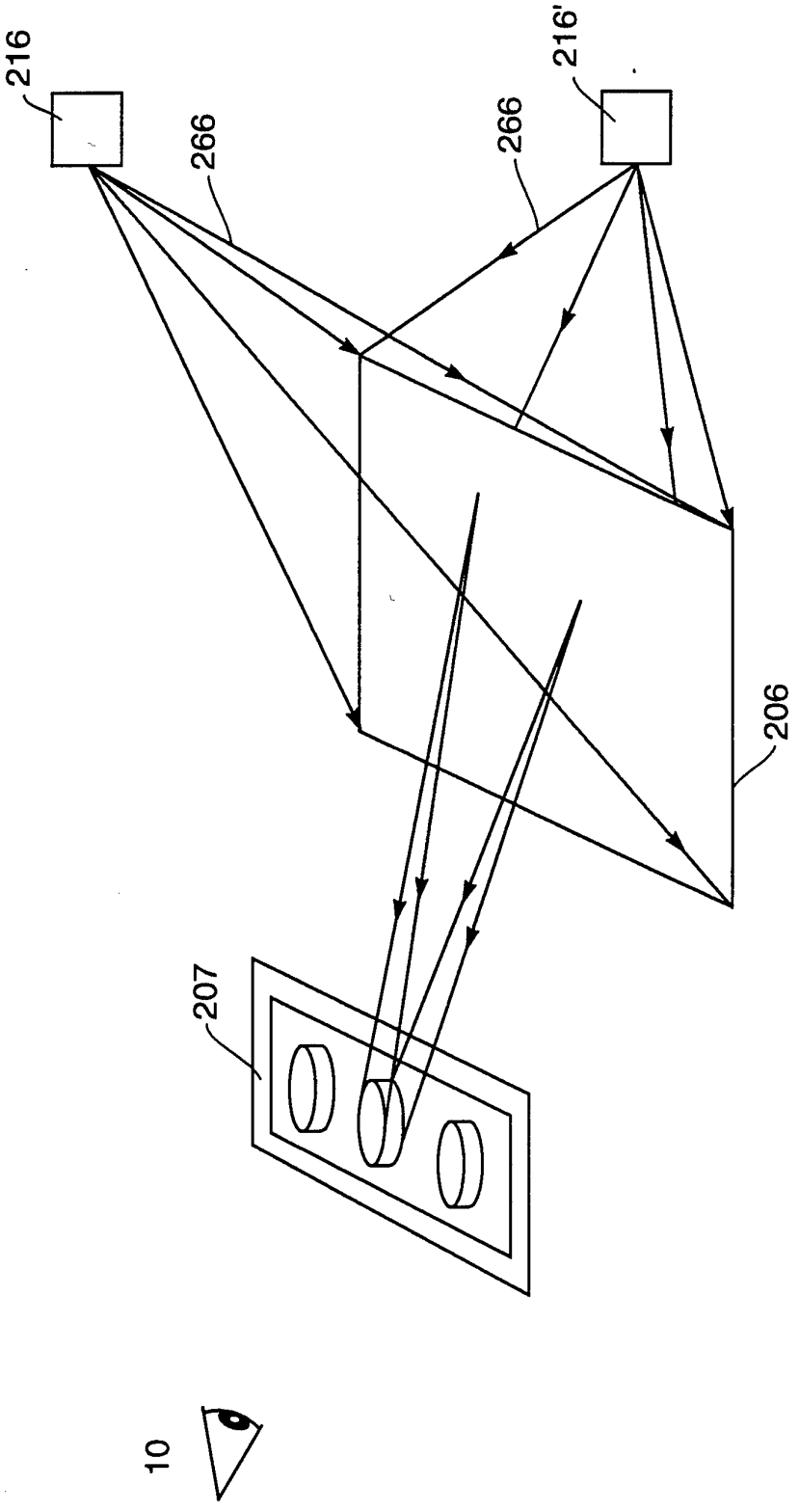

FIG. 5

INTERNATIONAL SEARCH REPORT

Intern. al Application No
PCT/US 94/04462

A. CLASSIFICATION OF SUBJECT MATTER
IPC 5 G06F3/00 G06F3/033 G03H1/22

According to International Patent Classification (IPC) or to both national classification and IPC

B. FIELDS SEARCHED

Minimum documentation searched (classification system followed by classification symbols)
IPC 5 G06F G03H

Documentation searched other than minimum documentation to the extent that such documents are included in the fields searched

Electronic data base consulted during the international search (name of data base and, where practical, search terms used)

C. DOCUMENTS CONSIDERED TO BE RELEVANT

Category *	Citation of document, with indication, where appropriate, of the relevant passages	Relevant to claim No.
X	PATENT ABSTRACTS OF JAPAN vol. 15, no. 503 (P-1290)19 December 1991 & JP,A,03 217 925 (DAINIPPON PRINTING CO) 25 September 1991 see abstract	1-5,7,8, 13,15,16
Y		6,9-12, 14,17

Y	US,A,4 593 967 (HAUGEN P. R.) 10 June 1986 cited in the application see abstract	6,12,14

Y	IBM TECHNICAL DISCLOSURE BULLETIN vol. 22, no. 6 , November 1979 , NEW YORK US pages 2505 - 2506 'Holographic Key Labeling'	9

	-/--	

[X] Further documents are listed in the continuation of box C.

[X] Patent family members are listed in annex.

* Special categories of cited documents :

"A" document defining the general state of the art which is not considered to be of particular relevance

"E" earlier document but published on or after the international filing date

"L" document which may throw doubts on priority claim(s) or which is cited to establish the publication date of another citation or other special reason (as specified)

"O" document referring to an oral disclosure, use, exhibition or other means

"P" document published prior to the international filing date but later than the priority date claimed

"T" later document published after the international filing date or priority date and not in conflict with the application but cited to understand the principle or theory underlying the invention

"X" document of particular relevance; the claimed invention cannot be considered novel or cannot be considered to involve an inventive step when the document is taken alone

"Y" document of particular relevance; the claimed invention cannot be considered to involve an inventive step when the document is combined with one or more other such documents, such combination being obvious to a person skilled in the art.

"&" document member of the same patent family

Date of the actual completion of the international search	Date of mailing of the international search report
10 August 1994	05.09.94
Name and mailing address of the ISA European Patent Office, P.B. 5818 Patentlaan 2 NL - 2280 HV Rijswijk Tel. (+31-70) 340-2040, Tx. 31 651 epo nl, Fax (+31-70) 340-3016	**Authorized officer** Bailas, A

Form PCT/ISA/210 (second sheet) (July 1992)

Internal Application No
PCT/US 94/04462

C.(Continuation) DOCUMENTS CONSIDERED TO BE RELEVANT

Category *	Citation of document, with indication, where appropriate, of the relevant passages	Relevant to claim No.
Y	PATENT ABSTRACTS OF JAPAN vol. 14, no. 504 (P-1127)5 November 1990 & JP,A,02 210 383 (FIJUTSU) 21 August 1990 see abstract ---	10,11
Y	GB,A,2 249 645 (GRANADA COMPUTER SERVICES) 13 May 1992 see page 1, line 24 - page 3, line 1 -----	17

INTERNATIONAL SEARCH REPORT

Information on patent family members

Intern al Application No
PCT/US 94/04462

Patent document cited in search report	Publication date	Patent family member(s)	Publication date
US-A-4593967	10-06-86	EP-A,B 0181553	21-05-86
		JP-C- 1691116	27-08-92
		JP-B- 3055765	26-08-91
		JP-A- 61110008	28-05-86
GB-A-2249645	13-05-92	NONE	