June 19, 1928. 1,674,359

H. FREY

FILING DEVICE

Filed March 17, 1927 2 Sheets-Sheet 1

Fig. 1.

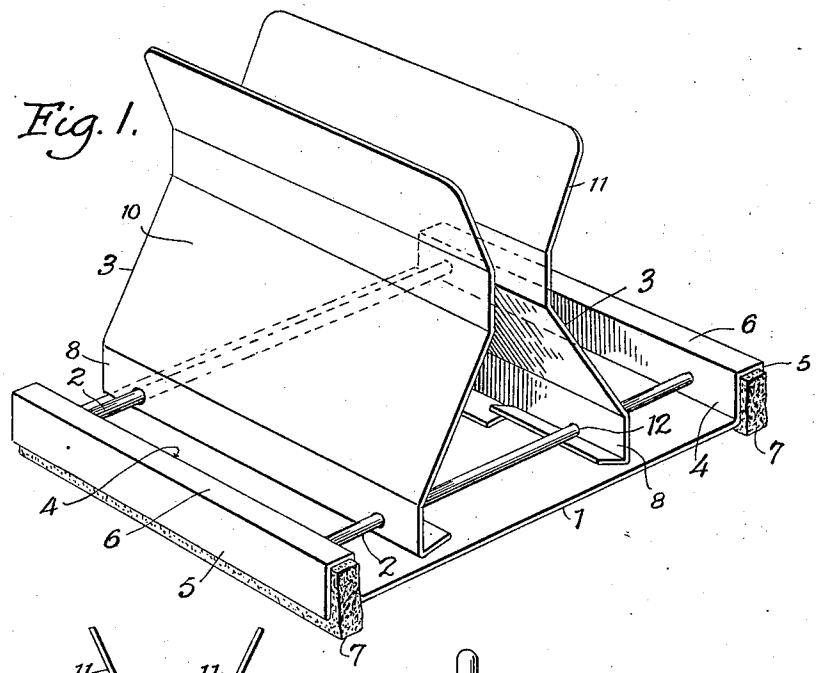

Fig. 2.

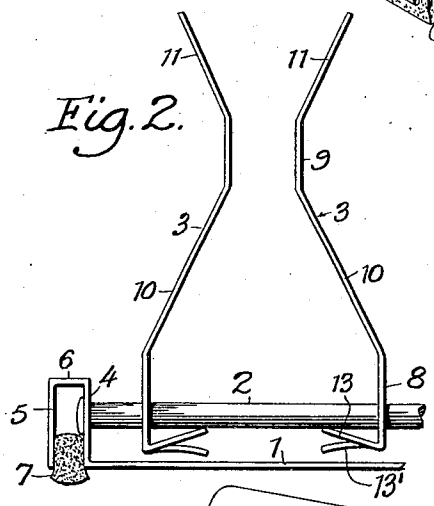

Fig. 4.

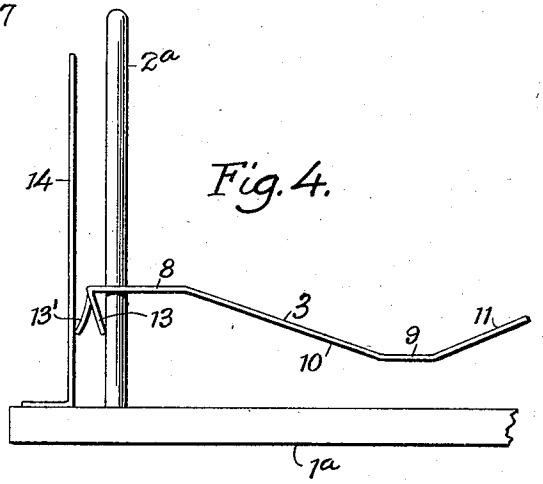

Fig. 3.

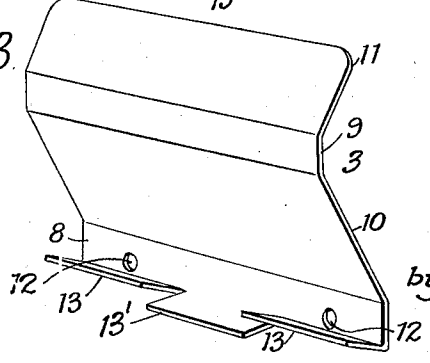

Inventor;
Henry Frey.
by a. a. Hines
Attorney.

June 19, 1928. 1,674,359

H. FREY

FILING DEVICE

Filed March 17, 1927 2 Sheets-Sheet 2

Fig. 5.

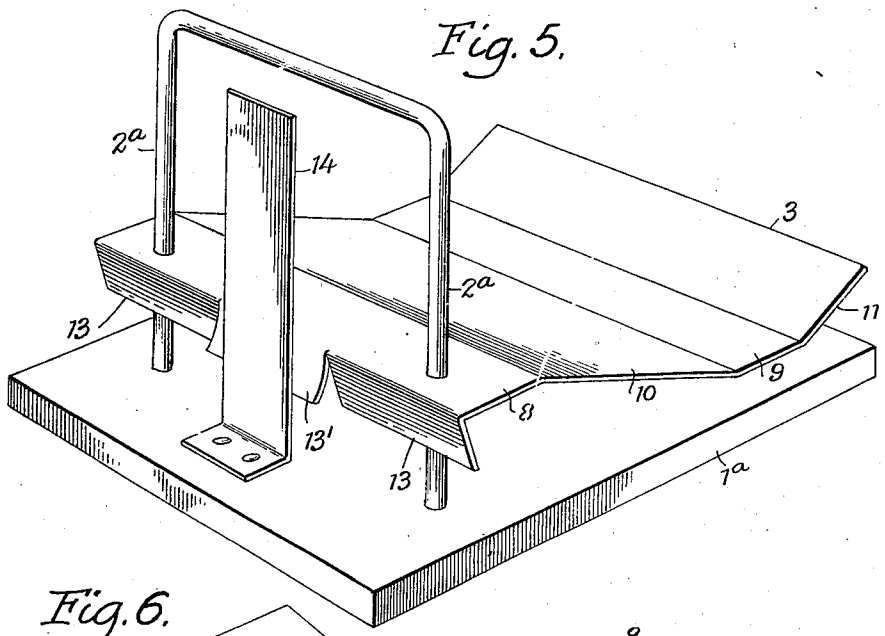

Fig. 6.

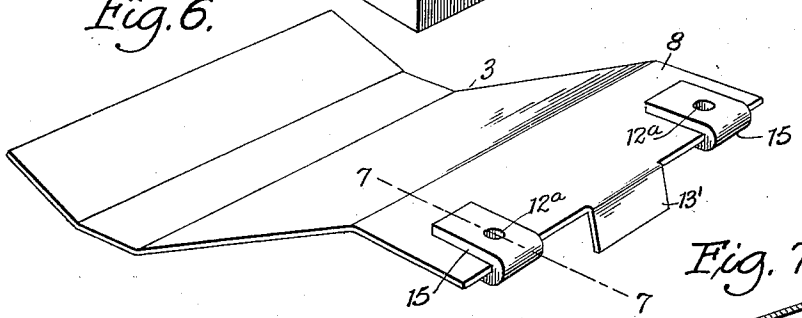

Fig. 7.



Fig. 8.

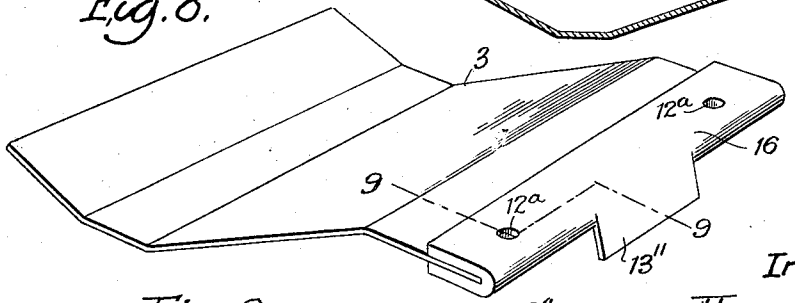

Fig. 9.

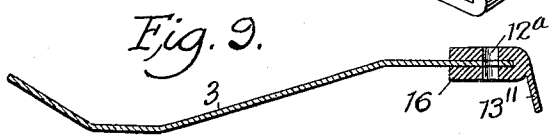

Inventor:
Henry Frey,
by A. A. Hines,
Attorney.

Patented June 19, 1928. 1,674,359

UNITED STATES PATENT OFFICE.

HENRY FREY, OF HAVANA, ILLINOIS.

FILING DEVICE.

Application filed March 17, 1927. Serial No. 176,062.

This invention relates to improvements in filing devices, and particularly to a filing device for holding papers, letters, currency, etc., the object of the invention being to provide a filing device which is simple of construction and reliable and efficient in use, which is instantly adjustable to hold a large or small number of sheets, which will securely hold in place a single sheet as well as a large number of sheets, and which allows the sheets to be instantly released without trouble or inconvenience.

The invention consists of the features of construction, combination and arrangement of parts, hereinafter fully described and claimed, reference being had to the accompanying drawings, in which:—

Figure 1 is a perspective view of one form of filing device embodying my invention.

Figure 2 is a fragmentary side elevation of the same.

Figure 3 is a perspective view of one of the followers or clamping members.

Figure 4 is a side elevation of a form of filing device for clamping papers against a baseboard.

Figure 5 is a perspective view of the device shown in Figure 4.

Figure 6 is a view of a modified form af follower.

Figure 7 is a section on line 7—7 of Figure 6.

Figure 8 is a view of another modified form of follower.

Figure 9 is a section on line 9—9 of Figure 8.

In the practical embodiment of my invention as shown in Figures 1 to 3, inclusive, I provide a frame structure comprising a base or backing 1 carrying guide rods 2 on which a pair of followers or clamping members 3 are slidably and tiltably mounted. In this form of the invention the sheets to be filed are disposed vertically and are clamped between the followers 3. The frame structure here shown, which includes the base or backing 1, is made of sheet metal and embodies end walls 4 rising from the end edges of the base or backing 1 and between which the rods 2 extend and to which they are suitably fixed at their ends. The base or backing 1 may consist, as shown, of a rectangular or oblong rectangular plate, from the end edges of which the walls 4 project upwardly so as to dispose the rods 2 above and at a prescribed level with respect to the base. Disposed on the outer side of and parallel with the walls 4 are walls 5 connected at their upper edges with the walls 4 by horizontal cross walls 6, thus providing a channeled end wall construction. Fitted in and gripped by these channeled walls are supporting strips 7 of felt, rubber or other suitable soft material which project at their lower edges below the plane of the base or backing 1. These strips provide supporting surfaces designed to rest upon and support the filing device upon a desk or other surface, such strips serving to prevent the filing device from slipping and also from scratching or otherwise marring such surface. The construction is such that in the event of the strips 7 becoming worn or damaged, the worn strips may be removed and others substituted in their place. The construction provides a metal frame in which the base or backing 1 and channeled end walls may be of unitary construction or formed of a single piece of sheet metal, the rods 2, in addition to serving as guides, also connecting and reinforcing the walls 4 so that a staunch and durable construction is produced. An open frame of this type may be employed for filing purposes in conjunction with the followers 3, or this frame may form the bottom of a suitable enclosing case, if desired.

Each follower 3 is preferably made of spring sheet metal bent into the shape disclosed, and comprises a lower guide portion 8, which is normally vertically disposed and is straight in a vertical direction, a straight, vertical clamping portion 9, a portion 10 connecting the portions 8 and 9, and an upper free end portion 11 forming a finger grip or manipulating portion. The portion 8 is provided with openings 12 for the reception and passage of the rods 2, said openings slightly exceeding the rods in diameter so that the follower may slide freely and tilt forwardly or rearwardly to specified degrees on the rods. The clamping portion 9 is disposed in a vertical plane parallel with but offset inwardly from the plane of the guide portion 8, and is connected at its lower edge with the guide portion by the obliquely arranged connecting portion 10, which forms

a resilient connecting member. The end portion 11 inclines outwardly and upwardly from the upper end of the portion 9 at a desired oblique angle. When the followers are arranged in clamping position, they are disposed reversely, so that their clamping portions 9 are closer to each other than their guide portions 8 and so that the connecting portions 10 thereof diverge in a downward direction, while their finger piece or manipulating portions 11 diverge in an upward direction. By reason of this construction, the clamping portions 9 may spread to wide degrees to permit of the insertion of a large number of sheets between them when the guide portions are arranged any specified distance apart, the spreading motion of the clamping portions 9, permitted by the yielding of the connecting portions 10, causing the latter to be placed under more or less spring tension, whereby the portions 9 are caused in turn to bear with considerable yielding spring pressure force on the sheets to hold them securely clamped. The diverging relationship of the finger piece 11 not only allows the upper edges of the sheets to be relatively free so that the portions of the sheets, above the clamping line, may be inspected under many conditions without a full releasing motion of the follower, but also provide for the ready and convenient manipulation of these members of the followers for follower adjusting actions. The guide portion of each follower is provided at its lower edge with a series of three inwardly projecting flanges 13 and 13′, forming a pair of end spring tongues and a central spring tongue. The end spring tongues 13 extend inwardly and upwardly at an oblique angle and are arranged to bear at their free edges against the undersides of the rods 2 to institute a spring binding pressure thereon during a clamping action of the follower, while the tongue 13′ projects inwardly and downwardly at an angle and forms a stop for engagement with the base or backing 1 to limit the inward and downward tilting movement of the follower when not under tension and not in use for clamping purposes.

In the use of the device, it will be understood that the sheets or papers to be filed are placed between the two followers 3 so that the outer faces of the outer sheets either adjacent to or below their top edges will be engaged by the clamping portions 9, between which the body or stack of sheets will be clamped. When the followers are arranged in close relationship and one or more sheets are disposed between them, the portions 9 will be disposed either in a vertical position or at slight outward relative angles to the vertical and each follower will be so arranged that its tongues 13 will engage the rods 2 and hold the followers from casual outward sliding movement. As the number of sheets is increased, and the portions 9 of the two followers are accordingly spread to greater degrees apart, the guide portions 8 will be tilted outwardly and the tongues 13 caused to bear with greater spring pressure on the rods 2, while the connecting portions 10 will also be moved outwardly and placed under tension or stress, whereby the sheets will be firmly clamped while at the same time the guide portions of the followers will be placed under torsion stress so that they will be frictionally bound against the rods with great force, rendering it impossible for the followers to be accidentally disengaged and release the sheets. To disengage the followers for adjustment, in order to effect a release of the sheets, it is necessary only to press inwardly on the finger portions 11, whereupon these portions will rock on the portions of the sheets against which they bear as an axis, thus transmitting a tilting motion to the guide portions 8, whereby such portions will be relieved from stress and adjusted to permit them to freely slide upon the rods 2, so that the followers may be spread apart and an instantaneous release of the sheets obtained.

In the form of the invention shown in Figures 4 and 5, a type of filing device is shown employing a single follower or clamping member which is vertically movable and designed to clamp the sheets horizontally against the base or backing. The base or backing 1^a here shown may be made of either wood or metal, and the guide rods 2^a here shown extend upwardly perpendicularly to the base and are formed by the sides of an arched rod of wire. The single follower here shown is of the construction previously described and its guide portion is mounted to slide vertically on the guides 2^a while its clamping portion is arranged to face the base or backing 1^a. It will be obvious that in this construction the follower is vertically adjustable and tiltable on the guide rods 2^a for clamping and releasing purposes. In order to hold this follower at any desired point of adjustment or elevation when free from engagement with end sheets and in order to increase its clamping efficiency, a spring pressure plate 14 is provided for coaction with its tongue 13′. This plate is secured at its lower edge to the base 1^a and extends upwardly parallel with the guides 2 so as to be engaged by the free edge of the tongue 13′ in the upward and downward sliding movements of the follower 3, and in all the positions of said follower. Thus it will be seen that while the follower may be tilted to reduce its frictional grip on the guide rods, so as to adapt it to be easily and conveniently adjusted upwardly and downwardly, the weight of the follower, when not under

stress, will cause the tongue 13′ to be held in engagement with the plate 14, which will exert a spring pressure thereon, the resulting pressure of the plate causing the tongues 13 to bind on the guides whereby the follower will be held at any point of elevation along the length of the guides 2^a.

In Figures 6 to 9, inclusive I have shown two modified forms of followers which may be employed in connection with the construction of base, guides and spring plates shown in Figures 4 and 5. In Figures 6 and 7 the construction in general of the follower is the same as that previously described, except that the tongues 13 are dispensed with and the follower is provided with U-shaped reinforcing and guiding pieces 15 which embrace the guide portion 8 in the region of its ends, such guide pieces and the guide portion being formed with openings 12^a for the passage of the guide rods 2^a. These guide pieces 15 give increased strength to the guide portion 8 and at the same time thicken those of its portions which engage the rods 2^a, allowing openings 12^a of a required length to effect a direct frictional bind of the guide portion on the rods when the follower is tilted in one direction, and a release of the friction bind when the follower is tilted in the reverse direction, this construction therefore allowing the tongues 13 to be dispensed with. The tongue 13′ is, however, preferably employed with this construction for coaction with the plate 14 to give a straight horizontal line binding pressure when the follower is free from clamping stress in order to maintain the follower at a desired elevation on the guides 2^a and to prevent it from dropping down by gravity. In the construction shown in Figures 8 and 9 the part 8 of the follower is devoid of both tongues 13 and the tongue 13′ and a continuous U-shaped reinforcing and guide strip is applied thereto, which is provided with the openings 12^a and the intermediate portion of which is slitted and bent outward to form a tongue 13″ corresponding to and serving the purpose of tongue 13′.

From the foregoing description, taken in connection with the drawings, the construction and mode of use of my improved filing device will be readily understood and it will be seen that the invention provides a simple and inexpensive type of construction of file device which provides for the quick and reliable clamping of the sheets of paper or other material and the ready and practically instantaneous release thereof when desired, and that an adjustment of the follower or followers for either clamping or release purposes may be secured without material labor and entirely without trouble or inconvenience to the user of the device. The structure, while simple, also provides a file device which is exceedingly strong and durable and not liable to be easily injured or to get out of order.

Having thus fully described my invention, I claim:—

1. A filing device comprising a frame structure having guides, and a follower having openings to receive said guides for slidably and tiltably connecting it with the guides, and provided with resilient projections inclined in one direction and engageable with the guides for allowing and limiting its tilting motion in one direction, and a resilient projection inclined in the opposite direction for engagement with a part of the frame for limiting its tilting motion in the opposite direction.

2. A filing device comprising a frame structure having guides, and a follower having openings to receive said guides for slidably and tiltably connecting it with the guides and provided with a resilient projection engageable with a portion of the frame structure for permitting free sliding motion of the follower while limiting its tilting motion in one direction.

3. A filing device comprising a frame structure having guides, and a follower having openings to receive said guides for slidably and tiltably connecting it with the guides and provided with a resilient projection inclined to its plane and to a plane at right angles thereto for engagement with a part of the frame structure for limiting its tilting motion in one direction.

4. A filing device comprising a frame structure including guides, and a follower having a base portion provided with openings to receive said guides for slidably and tiltably connecting it with the guides, said base portion being provided with resilient projections to engage the guides for permitting and limiting the tilting motion of the follower in one direction and provided with a resilient projection to engage a portion of the frame independent of the guides for limiting the tilting motion of the follower in the opposite direction.

5. A filing device comprising a frame structure including guides, and a follower slidably and tiltably engaging the guides and provided with resilient means for limiting its tilting motions, said follower having spaced base and clamping portions lying in different parallel vertical planes, an inclined connecting portion between its base and clamping portions, and a manipulating portion at its free end inclined in a direction reverse to the direction of inclination of said connecting portion.

6. In a filing device, a follower having a base portion apertured for slidable and tiltable engagement with guides of a frame, said base portion having resilient members inclined to its plane in one direction for en-

gagement with the guide to permit and limit its tilting motion in one direction and having a resilient portion inclined reversely to the first-named resilient portions for engagement with a part of the frame to limit its tilting motion in the reverse direction.

7. In a filing device, a follower formed of resilient metal and adapted to be slidably and tiltably mounted on a guide, said follower having base and clamping portions lying in different parallel vertical planes, an inclined connecting portion between the two, and a manipulating portion at its end opposite the base portion inclined at a reverse angle to the connecting portion.

8. In a filing device, a frame structure including guides, and followers of resilient metal slidably and tiltably engaging the guides, and provided with means for resiliently limiting their tilting motion in at least one direction, each follower comprising base and clamping portions lying in different parallel planes, an inclined connecting portion between said base and clamping portions, and a free end portion inclined in a reverse direction to the connecting portion, said followers being arranged in reverse order on the guides so that their clamping portions lie closest to each other and their free end portions relatively diverge.

9. A filing device comprising a base plate, channeled walls at the end of said base plate extending above the plane of the base plate and open at their base portions, guides extending above and parallel with the base plate between said end walls, followers mounted on said guides, and strips of soft material fitted in the channels of the channeled end walls and projecting below the level of the base plate to serve as supports.

10. In a filing device, a follower having a base portion apertured for slidable and tiltable engagement with guides, a clamping portion, an inclined connecting portion between the base and clamping portion, and a resilient projection on the base portion extending at an angle thereto for engagement with a portion of a frame on which the follower is mounted to limit the tilting motion of the follower in one direction.

In testimony whereof I affix my signature.

HENRY FREY.