(No Model.) 2 Sheets—Sheet 1.

E. E. HARDY.

VELOCIPEDE.

No. 441,409. Patented Nov. 25, 1890.

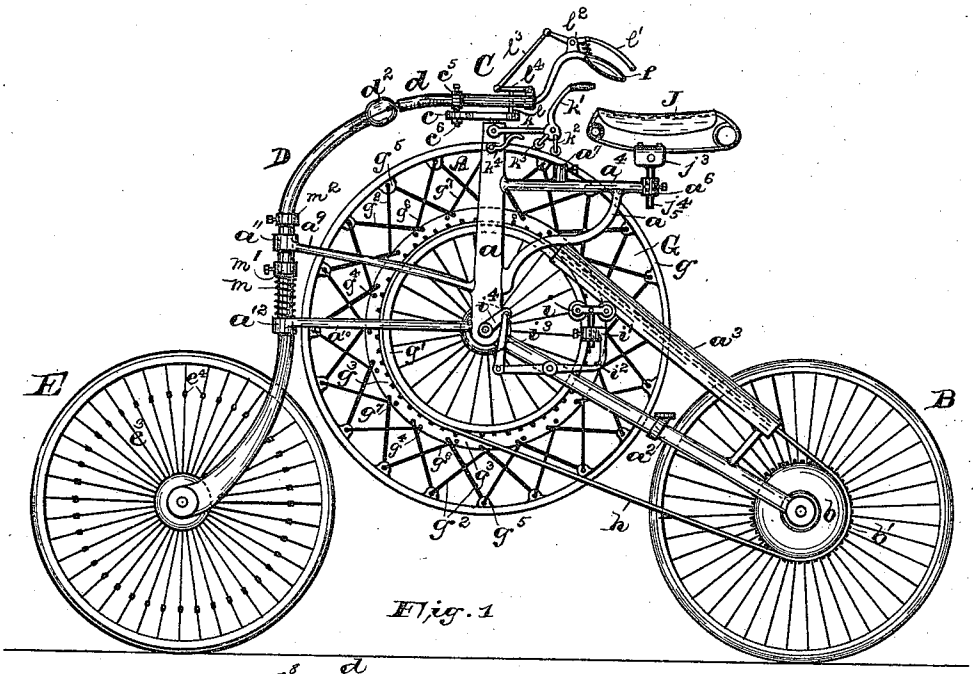

Fig. 1

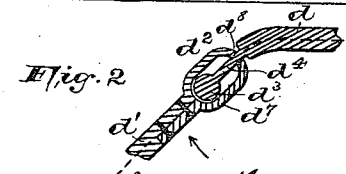

Fig. 2

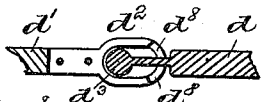

Fig. 3

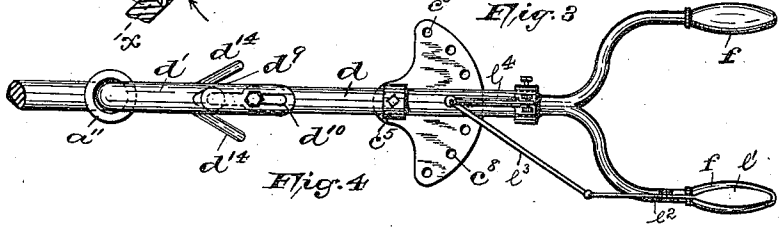

Fig. 4

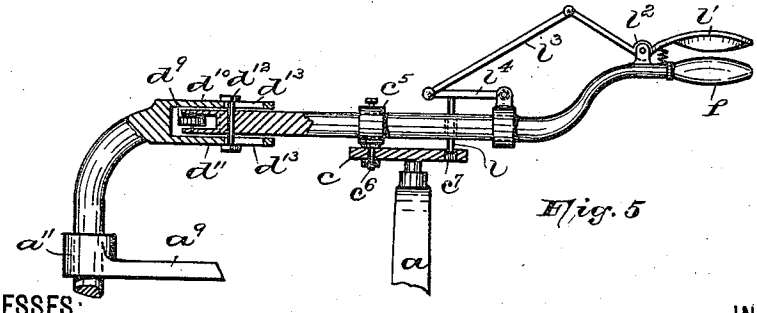

Fig. 5

WITNESSES:

Wm. H. Canfield.

Henry J. Falk.

INVENTOR:

Emery E. Hardy.

BY Fred C. Fraentzel, ATTY.

THE NORRIS PETERS CO., PHOTO-LITHO., WASHINGTON, D. C.

(No Model.) 2 Sheets—Sheet 2.

E. E. HARDY.

VELOCIPEDE.

No. 441,409. Patented Nov. 25, 1890.

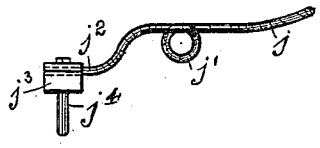

Fig. 13

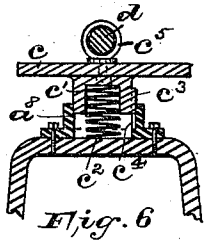

Fig. 6

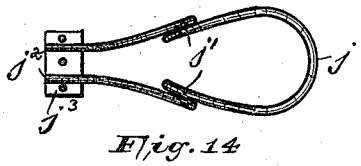

Fig. 14

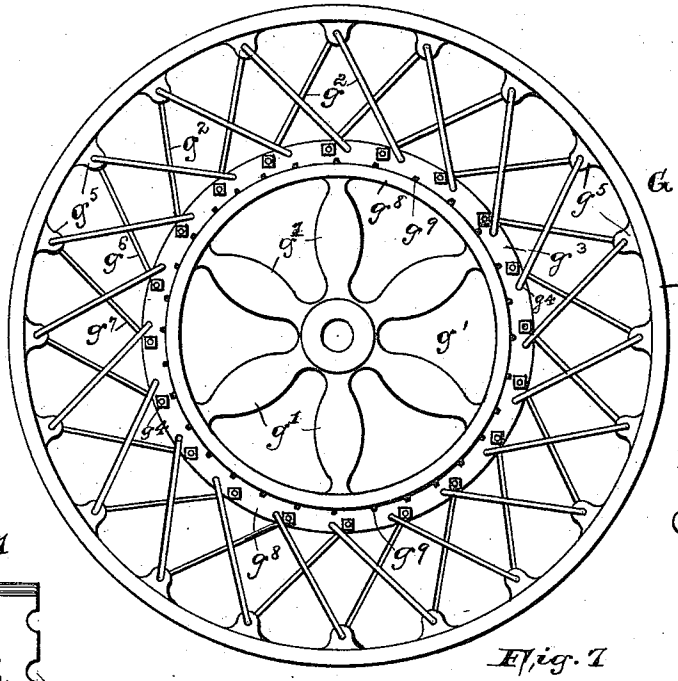

Fig. 7

Fig. 10

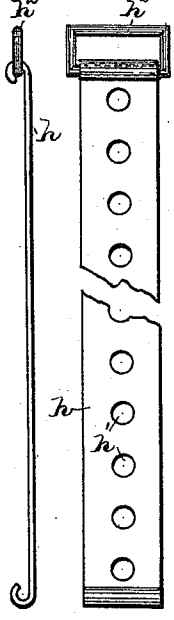

Fig. 11





Fig. 12

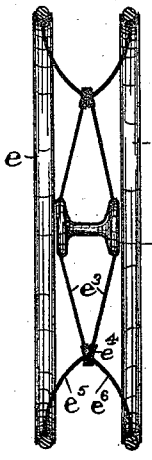

Fig. 8

Fig. 9

WITNESSES:

Wm. H. Caulfield.

Henry J. Falk.

INVENTOR:

Emery E. Hardy.

BY Fred'k C. Fraentzel, ATTY.

THE NORRIS PETERS CO., PHOTO-LITHO., WASHINGTON, D. C.

UNITED STATES PATENT OFFICE.

EMERY E. HARDY, OF NEWARK, NEW JERSEY.

VELOCIPEDE.

SPECIFICATION forming part of Letters Patent No. 441,409, dated November 25, 1890.

Application filed March 26, 1890. Serial No. 345,403. (No model.)

To all whom it may concern:

Be it known that I, EMERY E. HARDY, a citizen of the United States, residing at Newark, in the county of Essex and State of New Jersey, have invented certain new and useful Improvements in Velocipedes; and I do hereby declare the following to be a full, clear, and exact description of the invention, such as will enable others skilled in the art to which it appertains to make and use the same, reference being had to the accompanying drawings, and to letters of reference marked thereon, which form a part of this specification.

The present invention relates to improvements in velocipedes or other similar motors; and the invention consists in novel combinations of parts and details of constructions hereinafter described, and finally embodied in the several clauses of the claim.

In the accompanying drawings, Figure 1 is a side elevation of a machine embodying my invention provided with a "spine" or rib attached to the main frame, and which is provided with a joint to receive a rotary movement from the steering-head. Fig. 2 is a vertical section of a ball-and-socket joint employed on the spine illustrated in Fig. 1; and Fig. 3 is a section through line x in Fig. 2, looking in the direction of arrow x'. Fig. 4 is a top view of the spine provided with a forked swivel-joint in place of the ball-and-socket joint and showing part of the steering-head provided with handles and a means for locking or holding said head and the spine at any desired angle; and Fig. 5 is a side view of the spine, illustrating the construction of the forked swivel-joint in vertical section, and also showing the locking device and means for operating the same. On Sheet 2, Fig. 6, is a sectional front view of the fork and the steering-head to illustrate more clearly the manner of connecting the spring-actuated lock-plate to the forked frame of the machine. Fig. 7 is a side view of the fly or balance wheel shown in Fig. 1, and Fig. 8 is a vertical section of the steering-wheel shown in the same view. Figs. 9 and 10 are a plan and end view, respectively, of a belt made from sheet metal, used in connection with the machine, provided with a central row of perforations and illustrating one method of securing the opposite ends of the belt together. Fig. 11 is a plan view of a belt having recessed portions along the longitudinal edges of the same, and Fig. 12 is still another method of securing the ends. Fig. 13 is a side view of a seat-frame made from spring-wire, and Fig. 14 is a top view of the same.

In the above-described views similar reference-letters designate corresponding parts in all the figures.

In the accompanying drawings, A designates the main frame, which consists of a fork a, provided at or near the lower ends of the prongs with backwardly-projecting arms a^2, between which is supported in a convenient manner a wheel B. To the upper end of the fork a is attached a steering-head C, consisting of a spring-actuated lock-plate c, on one end of which is pivotally secured a spine or rib D, provided with a steering-wheel E, said spine also being provided with the steering-handles f, and a means attached to one of the handles for holding the spine in its locked engagement with the lock-plate c at any desirable angle.

The driving or balance wheel G is journaled in bearings in the lower extremities of the fork a, which may be of any suitable construction, in such a manner that said wheel is entirely suspended above the level of the ground.

The fly-wheel or balance-wheel consists, as here shown, of an outer rim g of any desirable weight, which is secured to a smaller and concentrically-arranged wheel g' by means of the crossed spokes g^3. Said wheel g' is provided on its circumference with an upwardly-extending rim g^3, having perforations g^4, and the spokes g^2 are bent to form a V, being passed through lugs or projections g^5 on the inner side of the rim g and the ends g^6 and g^7 being passed on opposite sides through the perforations in the rim g^3 on the wheel g', and firmly secured thereto by means of nuts or in any other convenient manner. Said spokes g^2 are crossed, as shown in Figs. 1 and 7, whereby the inner and smaller wheel is firmly and securely held in its proper place within the larger wheel. The small wheel g', which may be provided with the ordinary wire spokes usually employed in velocipedes, or with spokes cast directly to the rim, as shown in Fig. 7, has on one or both sides an out-

wardly-projecting flange g^8, provided on its upper surface with upwardly-projecting pins or projections g^9.

To the axle of the wheel B is secured a smaller wheel b, provided with correspondingly-arranged pins or projections b', and around the periphery of this wheel and the circular flange g^8 is placed an ordinary drive-chain, or I may use a flexible metallic belt h, having perforations h' therein, which passes over and around the pins g^9 and b', and whereby the power from the driving or fly wheel is communicated to the wheel B. The ends of said belt are hook-shaped for securing them together, as in Fig. 12; or an ordinary link h^2, as shown in Fig. 9, may be used for connecting the ends of the belt. A fender a^3 is shown above the chain or belt in Fig. 1 secured to the main frame in any convenient manner.

The driving or fly wheel G is operated by means of treadles i, adjustably secured in a collar i' by means of a post, said collar being situated on curved arms i^2, which are conveniently pivoted to the arms a^2 of the main frame, and links i^3 communicate the power from said arms to the cranks i^4, attached to the fly-wheel shaft.

On opposite sides of the fly-wheel and secured to the fork are arms a^4 and a^5, provided with a socket a^6, in which is adjustably arranged a saddle or seat J. The frame to which said saddle is secured consists, essentially, of a single piece of spring-wire j bent, as shown in Figs. 13 and 14, into loops j', and the free ends j^2 of the wire are secured in any convenient manner to a plate j^3, having a post j^4 loosely arranged in the socket a^6, and held in position therein by means of a set-screw. As shown in Fig. 1, one of the arms a^4 may be provided with an upwardly-projecting socket a^7, or other similar means, to receive the end of an umbrella or sunshade handle.

Near the upper end of the fork a is secured an arm k, having a handle k', which is provided with downwardly-projecting fingers k^2, bearing rollers k^3, preferably of hard rubber, which can be forced against the rim of the fly-wheel, thereby serving to slacken or stop the motion of said wheel. A spring k^4 serves to return the arm k to its normal position when not in operation.

As illustrated more especially in Figs. 1, 4, 5, and 6, the steering-head C is secured to the fork a by means of a hollow post c', formed on the under side of the plate c, which extends down into a socket a^8 on the upper end of the fork, a spring c^2 being placed within said parts to give an easy motion when riding over rough roads. The post c' is provided with a projection c^3, working in a slot c^4 to prevent the rotation or turning of said parts, as will be understood.

Within a swivel-ring c^5, adapted to turn on a pin c^6 in a perforation in the plate c, is secured one end of the spine or rib D, projecting therethrough over and above the plate c, and being provided at its end with the handle-bars f. The spine or rib consists of two parts, one of which, as d, is provided with the handles f and is connected with the steering-head C, as has been described, and the other end d', which is curved to approximately correspond with the curvature of the drive or fly wheel, is provided at its lower extremity with a steering-wheel and is secured to the main frame by two arms a^9 and a^{10}, provided with eyes or rings a^{11} and a^{12}, within which said spine can rotate about its vertical axis. The ends of the parts d and d' may be pivotally secured to one another by means of a ball-and-socket joint d^2, as shown in Figs 1, 2, and 3, or by means of the forked swivel-joint illustrated in Figs. 4 and 5.

The following is a description of the ball-and-socket joint: The end of the part d of the spine is provided with a ball d^3, having a narrow neck d^4. Said ball is placed within an elongated half-shell d^5 on the part d', and a plate d^6, provided with a correspondingly-shaped shell d^7, is secured thereto, preferably to the under side, by means of screws or bolts, thus forming an entirely closed casing around the ball d^3, having a lateral slot d^8, in which the neck of the ball can freely move.

In Figs. 4 and 5 is shown a swivel-joint, in which the part d of the spine is slotted on the end and is provided with a roller d^9. The other part d' of the spine is provided with fingers d^{10} and d^{11}, to which is pivotally attached, by means of a bolt d^{12}, said part d, said bolt being adapted to slide in slots d^{13} in the fingers d^{10} and d^{11}. When the part d of the spine has been caused to be rotated to one side, the roller d^9 engages with the inner side of one of the prongs d^{14} on the part d', causing said part to rotate in its bearings on the arms a^9 and a^{10}, and thereby bringing the steering-wheel into the desired direction for steering the machine.

The operations of the steering and its locking device are as follows: When the machine is being operated by means of the treadles and is moving in a straight direction, a pin l is in engagement with a centrally-arranged perforation or hole c^7, near the front edge of the plate c, and the spine is thus held or locked, and all the wheels of the machine move in the same vertical plane. Now, when it becomes necessary to turn the machine to either side of the direction in which it is moving, I have provided a lever l', pivotally secured above one of the handles f, which when depressed moves a bell-crank l^2, and by means of a link l^3 the arm l^4, secured in bearings on the end d of the spine, and the pin l, which passes and extends through a perforation in said end d, is raised out of the hole c^7 in the plate c, thus allowing the handles f to be turned in either direction, either to the right or left, and the pin l can be dropped into any of the other holes c^8 in said plate c. When the part d has been operated

by means of the handles, the movement of the ball in the joint connecting the parts d and d' in the spine forces the part d' to one side, causing the same to rotate in its bearings and bringing the steering-wheel into the desired direction. When the pin l has been inserted into one of the holes c^8, either to the right or left of the central axis of the machine, and allowed to remain therein, then the spine and its wheel will be held at an angle until said pin l is brought back to its original position by means of the locking device.

The steering-wheel E may be of any well-known construction, or I may use the construction shown in Fig. 8. In said construction the wheel consists of two rims or fellies e and e', arranged to run parallel with each other. From their common hub e^2 extend the spokes e^3, connected at their free ends by means of a joint or connecting-piece e^4, which is Y-shaped, and on the opposite end of said piece spokes e^5 and e^6 are arranged, one of which, as e^5, is secured to the rim e, while the spoke e^6 is secured to the rim e'. Thus I have obtained a double wheel having a common hub, whereby a very strong wheel is the result, and, furthermore, said rims e and e', being quite close together, act to produce a single wheel.

Another advantage obtained is that when the rider dismounts the machine is caused to remain in a standing position, thereby avoiding the necessity of supporting the same against some other object.

To prevent the jarring motion of the machine when passing over rough roads, I have arranged on the spine a spiral spring m, which encircles the same and rests upon the upper side of the bearing a^{12} on the arms a^{10}, a collar m' being secured to the spine by means of a set-screw above said spring. A second collar m^2 may be arranged above the bearing a^{11} on the arm a^9 to stop the down movement of the rib or spine, when necessary. Thus it will be seen that the spring m on the spine acts in conjunction with the spring c^2 in the steering-head, and a free and easy motion of the machine is the result.

Having thus described my invention, what I claim is—

1. In a velocipede or similar motor, a main frame provided with a forked arm, having arranged therein a fly or driving wheel, the rim of which is connected by means of spokes with the felly of the fly-wheel, and said inner wheel suspended on an axle above the ground, said wheel being provided with a concentrically-arranged inner wheel having pins or projections thereon, and means serving to transmit power from said inner wheel to the axle of the driven wheel, for the purposes set forth.

2. In a velocipede or similar motor, a main frame, a steering-wheel attached to a jointed spine or rib, consisting of two parts connected by a ball-and-socket joint or its equivalent, a rear wheel mounted in bearings in arms on the main frame, an intermediately-arranged fly-wheel suspended in the main frame above the ground, a concentrically-arranged driving-wheel, and means on said driving-wheel connected with and adapted to communicate the rotary motion of said wheel to the rear wheel, for the purposes set forth.

3. In a velocipede or similar motor, a main frame, a steering-wheel attached to a spine or rib adapted to rotate in bearings in the main frame, said spine consisting of two parts connected by means of a ball-and-socket joint or its equivalent, a rear wheel mounted in bearings in arms on the main frame, an intermediately-arranged driving-wheel suspended in the main frame above the level of the ground, and means on said driving-wheel connecting with and adapted to communicate the rotary motion thereof to the rear wheel, for the purposes set forth.

4. In a velocipede or similar motor, a main frame, a steering-wheel attached to a spine or rib adapted to rotate in bearings in the main frame, said spine being provided with a spring encircling the same between said bearings and consisting of two parts connected by means of a ball-and-socket joint or its equivalent, a rear wheel mounted in bearings in arms on the main frame, a driving-wheel mounted in a fork in said main frame, and a steering device at the upper end of said fork, for the purposes set forth.

5. In a velocipede or similar motor, a main frame, a steering-wheel attached to a spine or rib adapted to rotate in bearings in the main frame, said spine consisting of two parts connected by means of a ball-and-socket joint or its equivalent, a rear wheel mounted in bearings in arms on the main frame, an intermediately-arranged driving-wheel suspended in a fork in the main frame above the level of the ground, a drive belt or chain for communicating the power of said wheel to the axle of the rear wheel, a steering-head provided with a handle-bar for transmitting the power from the same to the spine and its wheel, and means on said steering-head for locking the parts thereof with the fork on the main frame, and thereby holding the steering-wheel and its spine at the desired angle, for the purposes set forth.

6. In a velocipede or similar motor, a main frame, a steering-wheel attached to a spine or rib adapted to rotate in bearings in the main frame, said spine consisting of two parts connected by means of a ball-and-socket joint or its equivalent, a rear wheel mounted in bearings in arms on the main frame, an intermediately-arranged driving-wheel suspended in a fork in the main frame above the level of the ground, said wheel consisting, essentially, of an inner wheel and an outer wheel secured by means of spokes to the rim of the inner wheel, said inner wheel being provided with a laterally-projecting rim having pins or projections, adjustable pedals

adapted to communicate foot-power to said fly-wheel, and a drive chain or belt engaging with said pins on the small wheel part of the fly or driving wheel, and a small wheel on the rear axle, also having pins or projections, for the purposes set forth.

7. The herein-described driving-wheel, consisting of an outer and a concentrically-arranged inner wheel having a laterally-projecting flange or rim provided with pins or projections, said rim being secured by means of spokes to the felly of the outer wheel, as set forth.

8. The herein-described driving-wheel, consisting of an inner wheel having a laterally-projecting flange provided with pins or projections and an upwardly-projecting flange surrounding its rim and to which a second wheel is secured by means of crossed spokes, as set forth.

9. The combination, with the driving and steering wheels and a main frame, of a curved spine consisting of two parts connected by means of a ball-and-socket joint or its equivalent, the upper part of said spine being attached to the top of the main frame by means of a swivel-bearing, steering-handles at the upper end of the spine, and means for holding said spine in its locking engagement with the top of the main frame, for the purposes set forth.

10. The combination, with the driving and steering wheels and a main frame, of a curved spine or rib consisting of two parts connected by means of a ball-and-socket joint or its equivalent, the lower part of said spine being secured in bearings in arms on the main frame and adapted to rotate therein, the upper part of said spine being attached by means of a swivel-joint to a plate on the main frame, steering-handles on the upper end of said spine, a pin passing through said part of the spine and extending down into a perforation in said plate to which the spine is pivoted, and means for raising and lowering said pin from and into the perforations, thereby allowing the spine to be forced to one side and to rotate in its bearings on the main frame, and causing said pin to drop into another perforation to lock the spine in the desired position, as set forth.

11. In a velocipede, the combination with the main frame, of a spine or rib pivoted to said frame and provided with a plate *c*, and means operated from the steering-handles to lock the steering-head in any desirable position, for the purposes set forth.

12. The combination, with the driving-wheel and a fork in which the same is mounted, of a steering device consisting of a plate *c*, having a hollow post on its under side, adapted to reciprocate within a socket on the top of the fork and provided with a spring therein, a rib or spine provided with a wheel pivotally secured to said plate *c*, and means operated from one of the steering-handles to lock the steering-head, for the purposes set forth.

13. The combination, with the driving-wheel and a fork in which the same is mounted, of a steering device consisting of a plate *c*, having a hollow post on its under side, adapted to reciprocate within a socket on the top of the fork and provided with a spring therein, substantially as and for the purposes set forth.

14. The combination, with the fork of a main frame and the plate *c*, of a spine or rib pivoted to said plate and provided at its upper end with the handles *f*, lever *l'*, bell-crank l^2, link l^3, arm l^4, secured in bearings on the spine or rib, and pin *l*, passing through a perforation in said spine and engaging with holes or perforations in the plate *c*, for the purposes set forth.

15. The combination, with a driving-wheel and a fork in which the same is suspended, of a brake mechanism consisting of a spring-actuated arm pivoted to said fork, having a handle, and having two arms or fingers provided with rollers adapted to be forced down upon the periphery of the driving-wheel, as and for the purposes set forth.

16. In a velocipede or similar motor, in combination, a main frame, a steering-wheel attached to a spine or rib adapted to rotate in bearings in the main frame, a spring encircling said spine, said spine consisting of two parts connected by means of a ball-and-socket joint or its equivalent, a rear wheel mounted in bearings in arms in the main frame, an intermediately-arranged fly or balance wheel suspended in a fork in the main frame on a crank-axle driven by means of propelling-levers having adjustable pedals and links secured to the frame, making connections between said crank-axle and the propelling-levers, means for communicating the power of the fly or balance wheel to a rear wheel, and a steering-head provided with steering-handles, and a locking or holding device for holding the spine and its steering-wheel at the desired angle, for the purposes set forth.

17. The herein-described velocipede-frame, having a forked arm provided with backwardly-extending arms having a socket for the reception of a saddle or seat therein and provided with a support for a sunshade or umbrella, arranged between said socket and the forked arm, as set forth.

18. The combination, with the fork and driving-wheel, of a spine or rib adapted to rotate in bearings on arms extending from said fork and being provided with a spring encircling said spine between said bearings, said spine being pivoted to a spring-actuated plate on the fork, whereby said spring on the spine acts in conjunction with a spring above said fork, for the purposes set forth.

19. The jointed rib or spine consisting of the parts *d* and *d'*, said part *d* having a ball end which fits into an oblong socket or pocket in the part *d'*, provided with a removable plate, and a slot in the end of said oblong socket, in which slides the neck of the ball on

the part d, and whereby the upper and lower extremities of the portion d' of the spine may move in horizontal planes, while that portion between the bearings on the main frame of the machine rotates about its vertical axis, as and for the purposes set forth.

20. In a velocipede or similar motor, in combination, a main frame, a steering-wheel attached to a rib or spine adapted to rotate in bearings in the main frame, a rear wheel mounted in bearings in arms a^2 on the main frame, an intermediately-arranged driving-wheel mounted on the main frame on a crank-axle, propelling mechanism consisting, essentially, of arms i', pivoted to said arms a^2 and provided with pedals, links i^3, and cranks i^4, means for communicating the power from the driving-wheel to the rear wheel, and a steering-head, all of said parts being arranged in the main frame, as and for the purposes set forth.

In testimony that I claim the invention set forth above I have hereunto set my hand this 15th day of March, 1890.

EMERY E. HARDY.

Witnesses:
FREDK. C. FRAENTZEL,
WM. H. CAMFIELD.