B. M. DAVIS.

SPEEDOMETER.

APPLICATION FILED DEC. 1, 1919.

1,401,396. Patented Dec. 27, 1921

4 SHEETS—SHEET 1.

Fig. 1.

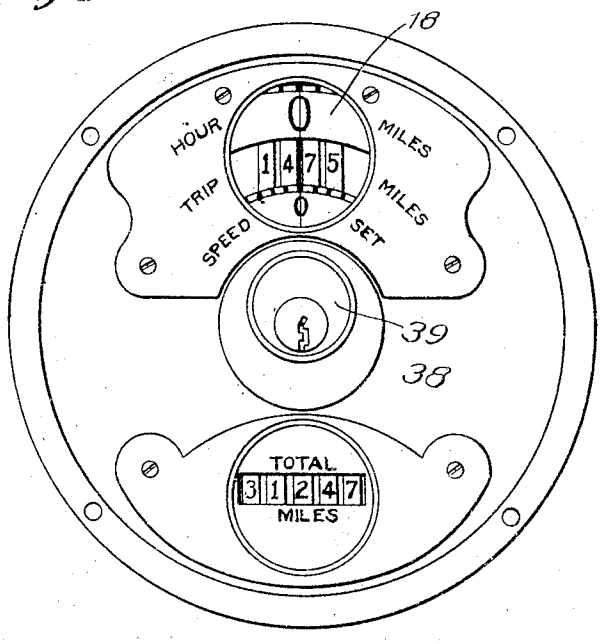

Fig. 2

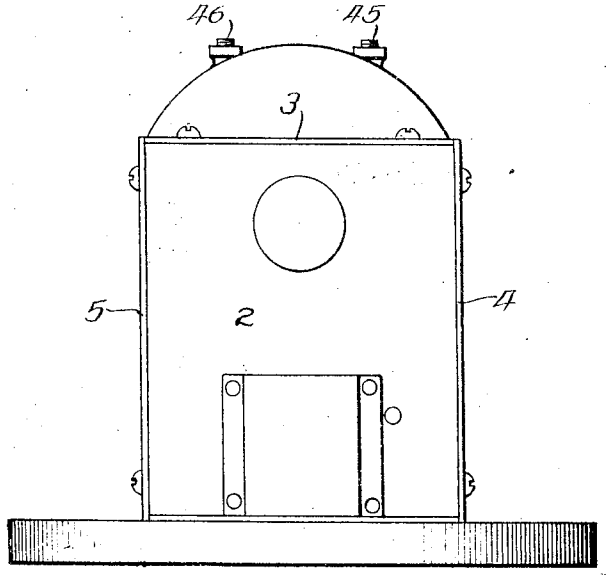

Inventor:
Bethuel M. Davis
By: Chas. C. Bulkley
Attys.

B. M. DAVIS.

SPEEDOMETER.

APPLICATION FILED DEC. 1, 1919.

1,401,396.

Patented Dec. 27, 1921.

4 SHEETS—SHEET 2.

Fig. 3.

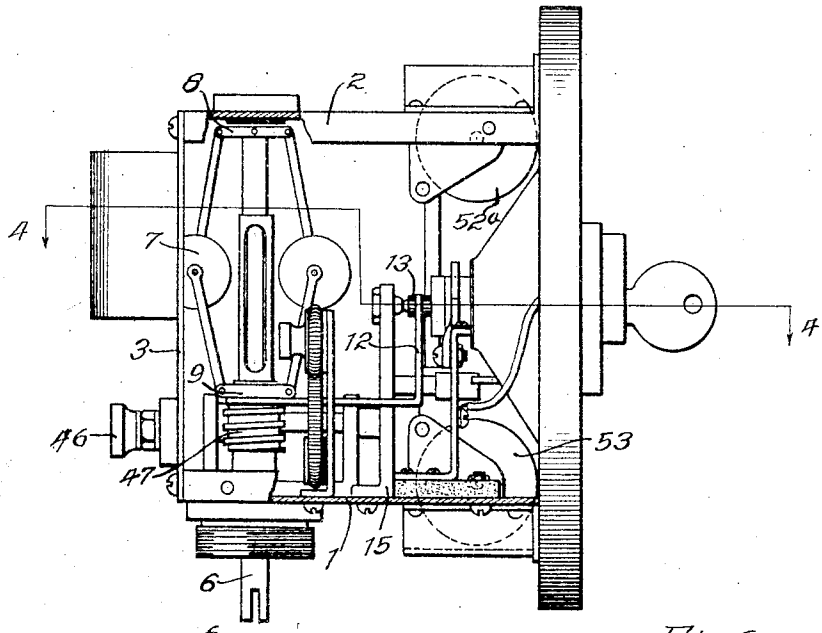

Fig. 5.

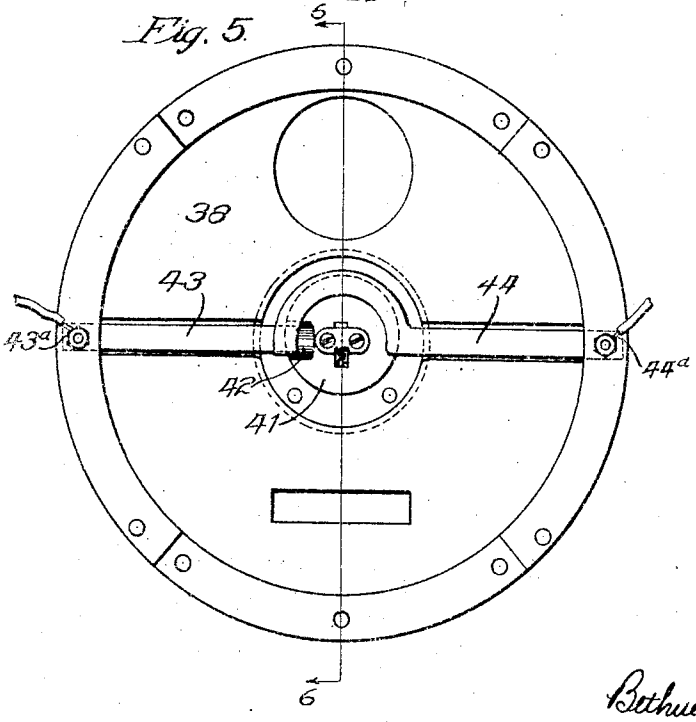

Fig. 6.

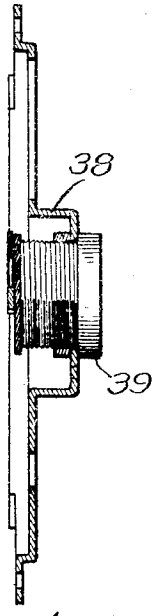

Inventor:
Bethuel M. Davis
By: Chas. C. Bulkley
Atty's.

B. M. DAVIS.

SPEEDOMETER.

APPLICATION FILED DEC. 1, 1919.

1,401,396.

Patented Dec. 27, 1921.

4 SHEETS—SHEET 3.

Fig 4.

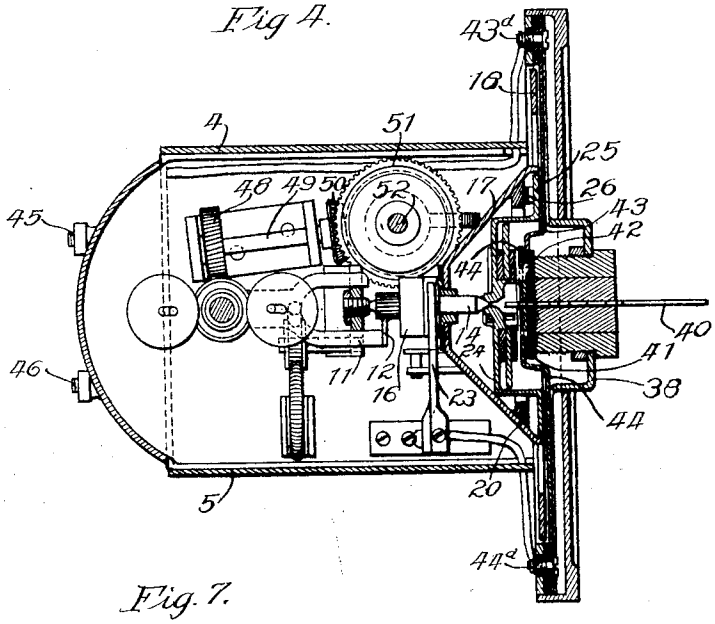

Fig. 7.

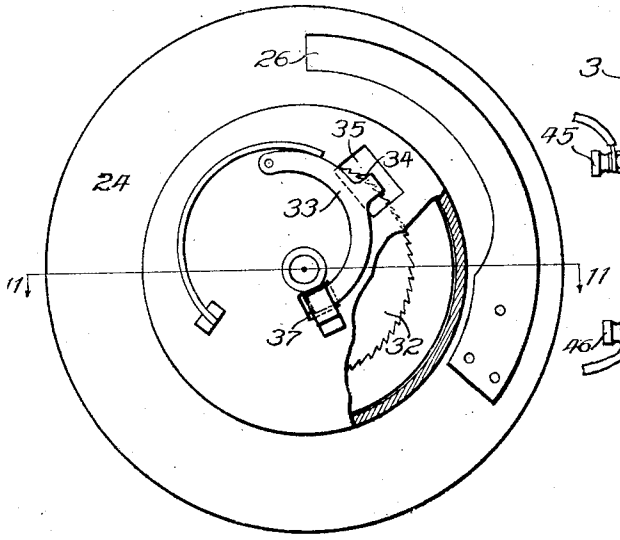

Fig. 15

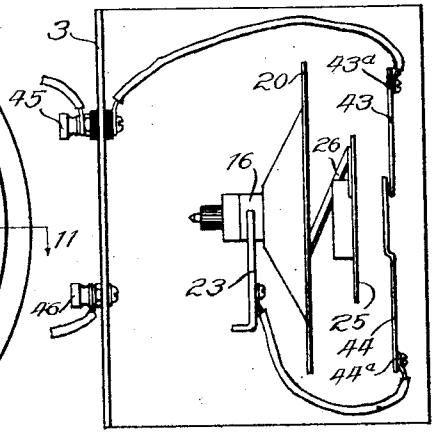

Inventor:
Bethuel M. Davis
By: Chas. C. Bulkley
Atty.

B. M. DAVIS.

SPEEDOMETER.

APPLICATION FILED DEC. 1, 1919.

1,401,396. Patented Dec. 27, 1921.

4 SHEETS—SHEET 4.

Fig. 8.

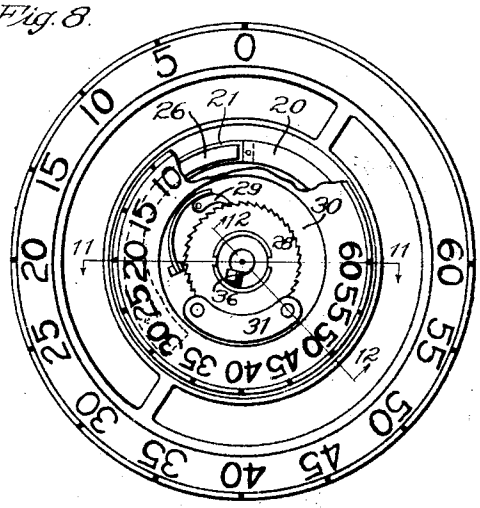

Fig. 11.

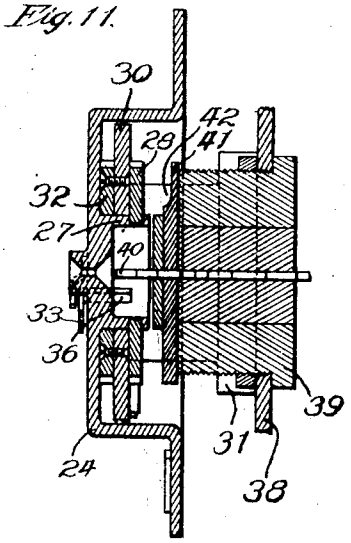

Fig. 9.

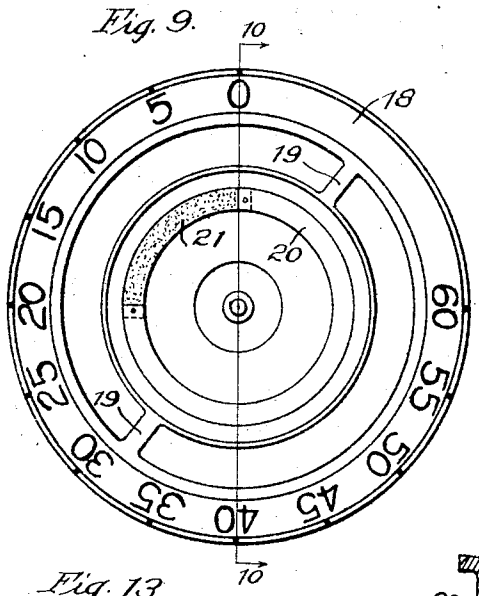

Fig. 10.

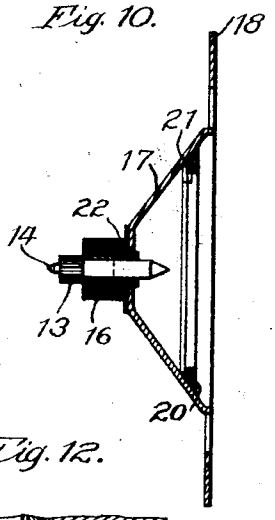

Fig. 12.

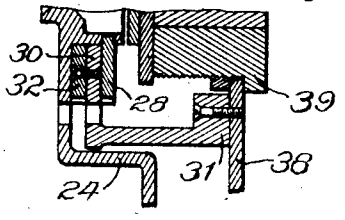

Fig. 13

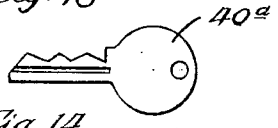

Fig. 14.

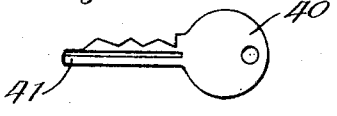

Inventor:
Bethuel M. Davis,
By: Chas. C. Bulkley,
Atty.

UNITED STATES PATENT OFFICE.

BETHUEL M. DAVIS, OF CHICAGO, ILLINOIS.

SPEEDOMETER.

1,401,396. Specification of Letters Patent. Patented Dec. 27, 1921.

Application filed December 1, 1919. Serial No. 341,716.

To all whom it may concern:

Be it known that I, BETHUEL M. DAVIS, a citizen of the United States of America, and resident of Chicago, Cook county, Illinois, have invented a certain new and useful Improvement in Speedometers, of which the following is a specification.

My invention relates to an improvement in speedometers, and has for its object an improved mechanism for use in connection with motor vehicles, or the like, for measuring the distance traversed as well as indicating and limiting the speed of the vehicle. By my invention, I also provide an improved locking means for the car which is controlled by either one of a pair of keys, either of which is operative to render the motor mechanism of the vehicle operative while but one of the keys is further operative to adjust and limit the speed at which the vehicle may travel. By my invention, it is thus possible for the owner of the car to set the speedometer at a given speed by means of the so-called master key, and then the possessor of the other key may operate the lock to render the motor mechanism of the vehicle operative, but cannot operate the car in excess of the indicated speed, and this indicated speed can only be adjusted or changed through the medium of the master key.

A further object of my invention consists in improvements in details of the mechanism for both measuring the distance traversed as well as for indicating the speed at any instant.

These and other features and objects of my invention will be more readily understood by having reference to the accompanying drawings in which I have illustrated one embodiment of my invention.

Figure 1 is a front elevation of my improved speedometer.

Fig. 2 is a top view of the same.

Fig. 3 is a side elevation, partly in section, with the side plates removed to more clearly show the interior construction.

Fig. 4 is a sectional view taken on the line 4—4 of Fig. 3.

Fig. 5 is a front view with the face plate removed.

Fig. 6 is a sectional view taken on the line 6—6 of Fig. 5.

Fig. 7 is an enlarged detail view looking at the rear of the speed regulation dial.

Fig. 8 is a front view of the indicating dials with parts broken away to more clearly show the interior construction.

Fig. 9 is a front view of the speed indicating dial.

Fig. 10 is a sectional view of this dial.

Fig. 11 is an enlarged detail sectional view of the lock and speed regulation dial.

Fig. 12 is a sectional detail view.

Fig. 13 is a side elevation of the small key.

Fig. 14 is a side elevation of the larger or master key.

Fig. 15 is a diagrammatic view showing the electrical circuit.

As illustrated, the speedometer is mounted between a base plate 1 and a top plate 2, to which is secured a suitable back plate 3 and side plates 4 and 5, these plates coöperating together to form an inclosing casing for the mechanism. That is, the base plate and top plate not only act as supporting plates for the mechanism but also form part of the inclosing casing thereby simplifying the construction. Passing through an opening in the base plate 1 is a shaft 6 which is driven from the vehicle through suitable connections, and mounted upon this shaft there is a centrifugal governor including the balls 7, a collar 8 fixed on the shaft 6, and a collar 9 slidably mounted upon the shaft 6. Secured to the collar 9 there is a laterally extending yoke member 11 having at the end of one of its arms an upwardly extending bar 12 provided with rack teeth which engage with a pinion 13. This pinion is mounted upon a pin 14, one end of which is adjustably supported by a bearing carried by the supporting bar 15 mounted on the base plate 1. The other arm of the member 11 engages on the opposite side of this supporting bar 15 so that this bar forms a guide for this yoke member. Mounted upon the pin 14 there is a short hub 16, which carries the conical-shaped metallic member 17, to the outer end of which the speed indicating dial 18 is secured by means of the connecting straps 19. Secured to the inside of the member 17, near the outer end thereof, there is a metallic ring 20, one section 21 of the front face of this ring being covered with an insulating material, this insulating section comprising about one-fourth of the circumference of the ring. Surrounding the hub 16 and in a metallic connection with the member 17, there is a metallic ring 22 with which a conducting brush 23 engages.

Mounted within the member 17 there is a cup-shaped member 24 which is adapted to rotate about the end of the pin 14 as an axis, this member carrying a flange or dial 25 upon the front face of which are suitable numerals to indicate the speed at which the engine will be cut off. Connected to this dial 25, there is a metallic brush 26 the inner end of which engages with the ring 20 carried by the member 17. Within the member 24 there is a short hub 27 to which a ratchet wheel 28 is keyed. A dog 29 is spring-pressed in engagement with this wheel to prevent backward movement of the same, this dog being carried on a disk 30 loosely mounted upon the hub 27. The disk 30 is held stationary by means of a supporting bracket 31 to which it is secured and which bracket is connected to the face plate 38. Secured to the back of the disk 30, there is a ratchet wheel 32 whose teeth are cut in the opposite direction to those of the ratchet 28, and pivotally mounted on the back of the cup-shaped member 24 there is a spring-pressed circular arm 33 which carries a pawl 34 which projects through an opening 35 in the member 24 and engages with the ratchet teeth on the ratchet 32. The end of the arm 33 is provided with an extension 36 which projects through an opening 37 in the back of the member 24.

Mounted on the face plate 38 there is a lock 39, which may be of any suitable construction provided with suitable tumblers operated by a key 40 in the usual manner. Secured to the inner end of this lock and rotating therewith is a disk 41 having a notch or indented portion 42 formed in the periphery of its rear face. A spring 43 is adapted to engage with this disk 41, the opposite end of this spring being connected with the terminal 43^a suitably insulated from the frame. A second spring 44 is connected to the terminal 44^a at the opposite side of the instrument likewise insulated from the frame, the inner end of this spring being curved and terminating adjacent to the end of the spring 43. When the spring 43 is in the depression 42, as indicated in Fig. 4, these two springs are out of engagement, but when the spring 43 rides up on the surface of the disk 41 it is forced into engagement with the spring 44. As indicated in Fig. 15, the terminal 43^a is electrically connected to the binding post 45 mounted on the back plate 3 and insulated therefrom. The terminal 44^a is electrically connected with the brush 23. The speed regulating dial 25 is grounded through the frame of the mechanism and in this way is electrically connected to the binding post 46 mounted in the back plate 3 and electrically connected therewith. It will thus be seen that the electrical circuit passes from the grounded binding post 46 through the frame to the dial 25, thence through the brush 26, ring 20 carried by member 17, ring 22, brush 23, spring 44, spring 44 to binding post 45. This circuit is thus controlled at two points, one by the engagement of brush 26 with the composite metallic and insulating ring 20, and the other by the engagement of springs 43, 44.

As indicated in Figs. 13 and 14, I provide two separate keys 40—40^a for operating the lock. One of these, key 40 shown in Fig. 14, may be termed the "master" key and differs from the key 40 in that it is provided with an extension or nose 41. Either of these keys when inserted in the lock will rotate the same so as to rotate the disk 41 to close the contact between the springs 43 and 44. When the master key 40, however, is inserted in the lock, the nose 41 extends inward past the lock a sufficient distance so that it lies adjacent to the lug 36 carried by the curved arm 33. When the key is rotated in the lock, this nose 41 will press against the lug 36, thus rocking the arm 33 upon its pivot and forcing the pawl 34 out of engagement with the ratchet 32. The movement of the arm 33 is limited by reason of the lug 36 striking the side of the opening 37 so that further rotation of the key causes the entire cup-shaped member 24 to be rotated, thus rotating the speed regulating dial 25 carried by the front portion of this member. When this dial is thus rotated, it likewise rotates the brush 26 which engages with the ring 20.

The operation of the speed regulating mechanism is as follows:—When the shaft 6 is rotated, the governor balls fly outwardly thus raising the sleeve 9, and moving the rack 12 upwardly to rotate the pinion 13, and thus rotate the member 14 and speed-indicating dial 18 carried thereby. As the member 14 rotates, the electrical circuit will be closed as long as the brush 26 is in engagement with the metallic part of the ring 20. As soon as the brush, however, engages the insulating portion of the ring, the circuit is then broken thus shutting off the engine. By adjusting the position of the brush 26 by means of the master key in the manner above described, the distance which the speed indicating dial 18 and ring 20 can be rotated before the spring 26 comes in engagement with the insulating portion 21 can be adjusted. Thus by rotating the indicating dial 25 until the numeral 20 appears in the sight opening of the face of the dial, the parts are so adjusted that the car will have to run at a speed of twenty miles an hour in order for the ring 20 to be rotated a sufficient distance to cause the brush 26 to engage the insulating portion 21 and thus break the circuit of the engine. Due to the length of this insulating section, it will be noticed that the circuit cannot be closed by increasing the speed of the car unless this speed is increased to such

an extent that the entire insulating section, or about one-quarter of the circumference of the ring, passes beneath the brush, which would mean that if the device were set for twenty miles an hour that the speed would have to be increased to about thirty-five miles per hour to again close the circuit, and if at any time the speed was reduced below thirty-five miles per hour the circuit would again be broken. This prevents the circuit being closed by coasting down a hill, as it would be rather difficult to obtain this high speed and to then maintain this speed, which would be necessary in order to maintain the circuit of the engine closed.

Mounted upon the shaft 6 below the collar 9 there is a worm 47 which drives a worm gear 48 on the shaft 49 upon the end of which is mounted a beveled pinion 50 which engages with the bevel gear 51 on a vertical shaft 52. This vertical shaft drives the trip mile counters 52ª and total mile counters 53. These counters can be of any well known construction and in themselves form no part of my present invention.

When the speedometer is employed in connection with internal combustion engines, the same will be connected directly in the primary circuit of the spark coil, but where it is employed in connection with electrically-driven vehicles the same can be inserted directly in the motor circuit, although in view of the heavy current in such circuit it probably, in such instances, would be advisable to control the motor circuit through the medium of a relay, which relay would be connected in circuit with a battery and the speedometer.

It will thus be seen that I have devised a very efficient mechanism for both measuring the distance traversed as well as for indicating and regulating the speed of the vehicle, and also for locking the vehicle. It will be seen that if, with the master key, the speed regulating dial is set for zero speed, the car cannot be operated even though the lock is operated by the smaller key, as the circuit is open at a second point. When the speed regulating dial is set for any other speed, however, then the car is locked until the lock is operated by either of the keys to close the contact between the springs 43, 44.

While I have illustrated and described a certain specific embodiment of my invention, it will be understood that I do not wish to be limited to the exact construction shown and described, but that various changes and modifications may be made without departing from the spirit and intent of my invention.

What I claim as my invention is:—

1. In a speedometer for use in connection with motor vehicles, means for indicating the speed of the vehicle, an electrical circuit passing through said speedometer, adjustable lock-controlled means for opening said circuit when said indicator indicates a predetermined speed, and a second normally open contact in said circuit controlled by said lock-controlled means.

2. In a speedometer for use in connection with motor vehicles, an electric circuit, a speed-indicating dial, means for opening said circuit at a predetermined position of said speed-indicating dial, locking means for predetermining the position of said dial at which said circuit will be opened, and a normally open contact in said circuit controlled by said locking means.

3. In a speedometer for use in connection with motor vehicles, means for indicating the speed of the vehicle, a normally open electric circuit, a locking device controlled by a pair of keys, either of said keys being adapted to operate said locking device to close said circuit, means for opening said circuit at a predetermined speed of said vehicle, and means controlled by but one of said keys for predetermining the speed at which said circuit will be opened.

4. In a speedometer, a rotary speed indicating dial, a second rotary dial associated therewith, an electric circuit, a contact element in said circuit movable with one of said dials, a second contact element adapted to engage with said first element and carried by the second dial, said contact elements being arranged so that the circuit is broken when said dials are in predetermined positions with respect to each other, and lock-controlled means for adjustably positioning said second dial to thereby vary the position of said speed indicating dial at which said circuit will be broken, said lock-controlled means also controlling said circuit at a second point.

5. In a speedometer for use in connection with motor vehicles, a speed-indicating dial, a second rotary dial associated therewith, means responsive to the speed of the vehicle for rotating said first dial, an electric circuit, a contact brush in said circuit carried by one of said dials, a contact ring in said circuit carried by the other of said dials, insulating material on a portion of said ring whereby when said brush engages said insulating portion said electric circuit is broken, and key-controlled means for adjusting the position of said second dial, said locking means also controlling said circuit at a second point.

6. In a speedometer for use in connection with motor vehicles, a speed indicating dial, a second rotary dial associated therewith, means responsive to the speed of the vehicle for rotating said first dial, an electric circuit, a contact brush in said circuit carried by one of said dials, a contact ring in said

circuit carried by the other of said dials, insulating material on a portion of said ring whereby when said brush engages said insulating portion said electric circuit is broken, locking means for adjusting the position of said second dial, said locking means also controlling said circuit at a second point, and a pair of keys for controlling said locking means, one of said keys adapted to control said circuit at both points while the other of said keys is adapted to control said circuit at but the second point.

Signed by me at Chicago, Illinois, this 26 day of November, 1919.

BETHUEL M. DAVIS.