Jan. 4, 1949. G. L. HARRELL 2,457,817

BOMB

Filed March 31, 1944

Fig. 1.

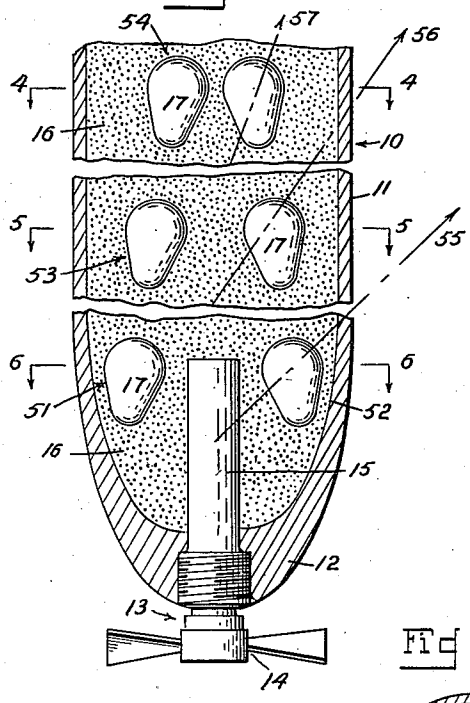

Fig. 2.

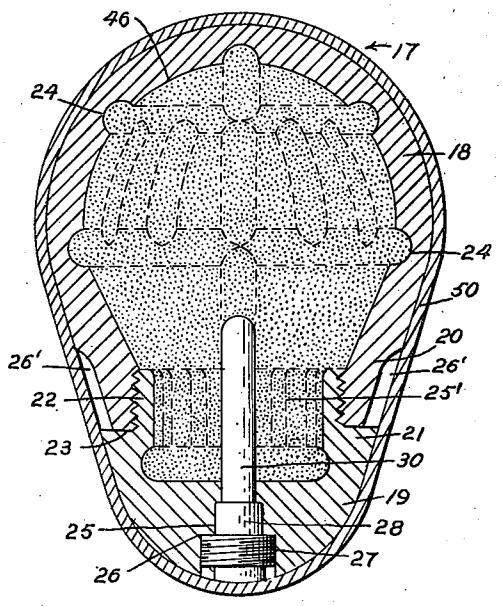

Fig. 3.

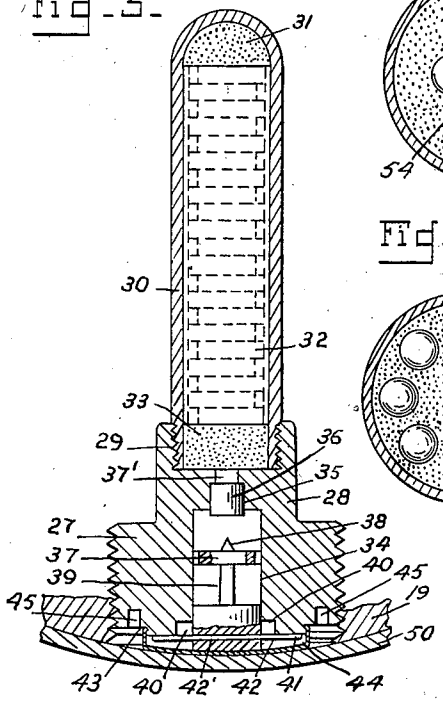

Fig. 4.

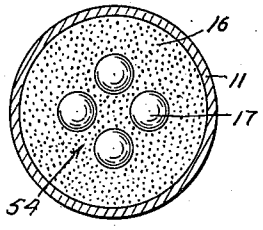

Fig. 5.

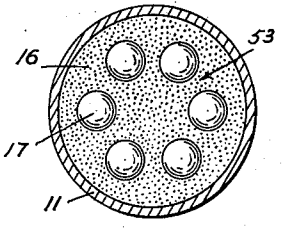

Fig. 6.

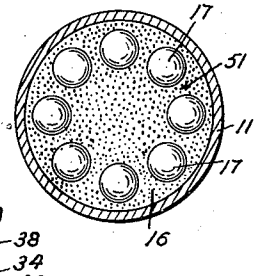

Fig. 7.

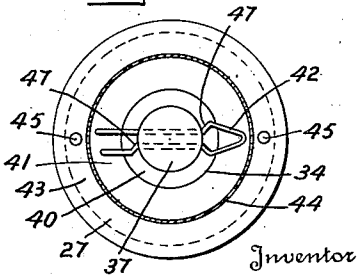

Inventor

Garland L. Harrell

By C. E. Herrstrom & H. E. Thibodeau

Attorneys

Patented Jan. 4, 1949

2,457,817

UNITED STATES PATENT OFFICE

2,457,817

BOMB

Garland L. Harrell, Hurst, Ill.

Application March 31, 1944, Serial No. 528,999

5 Claims. (Cl. 102—2)

(Granted under the act of March 3, 1883, as amended April 30, 1928; 370 O. G. 757.)

1

The invention described herein may be manufactured and used by or for the Government for governmental purposes, without the payment to me of any royalty thereon.

The invention relates to multiple unit anti-personnel, demolition, and fragmentation bombs and projectiles, and mines, and has for an important object to enable the conversion of conventional high explosive projectiles or bombs not ordinarily dependent for utility on fragmentation, into combined high concussion detonating and multiple unit fragmentation ammunition; and also alternatively to enable the conversion of the ordinary single container fragmentation bomb or projectile into a dispersible multiple container instrument in which an initial demolition or fragmentation explosion of highly destructive effect is obtained, followed by a multiplicity of lesser anti-personnel and light structure fragmentation and demolition explosions corresponding to grenade actions over a wider area than that of the immediate destructive effect of the first or parent explosion.

While I am aware of prior efforts to obtain wider zones of dispersion as exemplified in prior multiple projectile devices, shrapnel devices and lateral barrel bomb devices, there are many objections to said prior devices which are overcome by my invention, and in addition there are novel and improved results attendant on use of my invention which make it of importance in enabling the attainment of objects in view in a notably simple way, and at a minimum expense, as well as avoiding disturbance of prior production practices and installations or projectile and bomb forms.

In addition, it is sought to avoid change of procedure or matériel used in firing projectiles or dropping bombs, when my invention is used.

An important aim of the invention is to enable the attainment of additional explosive effects involved in my invention and at the same time improve the flight characteristics and trajectory forms of bombs and projectiles of this general character.

In this specification, generally, the term "projectile" will be considered to include both those to be propelled by explosives from guns or otherwise, as well as those technically called "bombs" to be dropped from airplanes, or "planted."

It is a special aim of the invention to present a novel explosive matrix and dispersible projectiles therein wherein novel dispersion effects

2

and novel initiation of successive detonations are attained.

Another purpose is to provide a novel construction of grenade unit for inclusion in number as dispersible elements in high explosive charges.

A special object is to offer a novel means for protecting such included units from premature fracture or detonation incident to the detonation of the main bursting charge.

Another special object is to offer a novel firing means for initiating the detonation of dispersible explosive units following the detonation of the main bursting charge in a bomb or projectile embodying my invention.

It is an important aim of my invention to create a more effective action in bombing from high altitudes and at night by increasing the chances of hitting important targets. That is to say, contrary to prior practice of using a great number of very small projectiles to be scattered as bullets or shrapnel and like fragments, it is my aim to incorporate in a high explosive bomb or shell a lesser number of independent explosive members which will be each of adequate size to effect substantial demolition; which will be scattered by the explosion of the main bursting charge of the bomb or shell and their individual detonations initiated by the main burst. While in lesser number than shrapnel or bullet fragments ordinarily contemplated heretofore, the units are still in sufficient number to cover amply a wide area. These secondary elements may thus function as bombs, either high-explosive, and/or fragmentation projectiles or as incendiary devices gaining access to interiors of structures the walls of which will have been opened or penetrated by the parent carrier bomb.

At the same time, should the parent fragmentation projectile or bomb strike in a more or less open area, the secondary projectiles may extend the effective area of concussion and distribution to much greater distances, as well as acting in directions the reverse of those in which the primary or parent fragments move, so that a more effective anti-personnel effect is obtained within the effective area of distribution of fragments from the parent device. This would be particularly valuable in a forested area against personnel, or against entrenched troops or those sheltered behind abutments or walls or in craters.

It is a special aim of the invention also to—by simple expedient involving no special structural features—accomplish a wide variation in trajectory individually or in groups, of the secondary

projectiles or bomb devices originating at the point of explosion of the parent or primary projectile.

Additional objects advantages and features of invention reside in the construction arrangement and combination of parts involved in the embodiment of or practice of the invention, as will be more clearly apparent from the following description and accompanying drawings, wherein:

Figure 1 is a longitudinal sectional view of the lower or nose end portion of a bomb corresponding to one now in use;

Figure 2 is an axial section of a grenade projectile as included in Fig. 1, actual size for one use;

Figure 3 is an enlarged detail of the fuse for the grenade;

Figures 4, 5 and 6 are cross sections of the bomb on lines 4—4, 5—5, and 6—6, respectively of Fig. 1;

Figure 7 is an end view of the fuse of Fig. 3 with the seal cap removed.

There is illustrated a main projectile shell body 10 which may be either one such as are fired from large caliber guns, or such as are used for 100-pound, 500-pound or larger bombs to be dropped from airplanes.

The shell wall 11 is substantially cylindrical for the major part of its length and may be either thick and grooved for fragmentation, or otherwise constructed for fragmentation, or may be thin as in demolition bombs, and the nose portion 12 may be of conventional structure adapted to receive a time fuse or point-detonation fuse, or a conventional nose fuse 13 for bombs, as formerly illustrated here. While the nose 12 is shown integral with the wall 11, other practices may be followed as may be current or developed for this general class of ammunition.

The particular device illustrated may be assumed to conform to and include all elements, as to structure and manner of use, of the 100-pound bomb M30 or 500-pound M43, now familiar, the tail fins being included, though not illustrated. Use of a tail fuse is optional as heretofore. My invention may be incorporated in other bombs or projectiles of different forms or structure, with immaterial, if any, modification of practice in embodiment. It is contemplated that it will be found advantageous to use my invention in the heaviest bombs, in some cases, modifying the number of secondary projectiles hereinafter referred to so that a number smaller in proportion to the amount of high explosive in the bomb may be used, a relative few, say eight or ten, being sufficient for some objectives; while for others it may be desirable to include a much greater number, say one hundred or several hundred, this bomb to be dropped following other large bombs so that after a factory building, for instance, has been collapsed a succeeding bomb will spread a myriad of small demolition charges in direct abutment with machinery in the debris where they will explode and cause further detail damage throughout the exposed material of the factory, whereas heavy bomb explosions would act or throw fragments in paths that would pass over the exposed material or would be impeded or interrupted by masses of debris intervening between the point of detonation of the bomb and the various pieces of apparatus.

The nose fuse 13 is indicated as of the "Mk.–VII–MII" type, having an arming vane 14, which drops off in operation after a certain distance of travel of the bomb when released, to permit detonation upon contact with the target. The fuse may include a booster charge 15 such as tetryl or other high explosive. The internal fuse structure 13 and mechanism or its manner of installation comprise no novel detail of this invention and therefore are not illustrated.

The chamber within the shell body 10 is filled as nearly as usual with a main or bursting explosive charge 16, such as TNT tetryl or other approved explosive or mixture, preferably one which is relatively insensitive to shocks short of violent detonation, and which also is solid and resistant to compaction at ordinary temperatures to which such matériel is subject during shipment and storage prior to use.

In this body of the main charge, as a matrix, there is set and embedded a plurality of secondary projectiles or shells 17, all of the same size in the present instance, arranged in groups, each symmetrical and of stable equilibrium with respect to the longitudinal axis of the primary projectile. Different groups may, however, be of different sizes, and in any given group certain members may vary in size if symmetrically arranged with others of like size and weight or otherwise proportioned and arranged to avoid an eccentric center of gravity or unbalanced moments of force incident to flight and rotation of the primary projectile.

These secondary projectiles each preferably corresponds to a large grenade in explosive effect, and also in fragmentation function, embodying fracturing characteristics whereby small fragments are produced for effective action against matériel or materials, when exploded immediately adjacent the target material and effective against personnel at greater distances.

The secondary projectile may be spherical or of other shape, but in the present instance, for economy of material and simplicity of production and assembly, are shown as being substantially pear-shaped, with substantially continuous smooth external surface. The projectile comprises a hollow body which may be of cast iron, including an upper shell piece or top 18 and a lower head 19, joined at a plane normal to the major axis of the body a short distance from its smaller extermity. The top is substantially semispherical in its upper part, terminating in a lower slightly frusto conical wall 20 terminating at the head 19, the latter being quartospherical and having a side wall 21 the outer surface of which is slightly conical in alinement with and meeting the wall 20 flush, with its elements coincident with those of the wall 20.

The lower open end of the top is tapped, and the upper part of the head 19 is formed with an externally threaded nipple or tenon 22 of reduced diameter, affording an upwardly presented shoulder 23 smoothly finished in a plane with the corresponding lower end surface of the top. Both the top 18 and the head 19 are suitably weakened for definite fragmentation to produce pieces of desirable sizes, and preferably, for reasons which will appear, any grooving formed for such purpose is preferably on the interior surfaces of this projectile, substantially as shown at 24 in Fig. 2. The spacing of the grooves may be varied appropriately for the purposes in view so as to produce larger or smaller fragments. The same primary or parent projectile may include secondaries grooved differently as will be appreciated. The tenon part 22 of the head may have a number of longitudinal grooves 25' therein and the lower wall part of the top may have kerfs 26' cut interiorly or

exteriorly as shown. By forming the grooves interiorly in the major surface area within the projectile a larger quantity of explosive may be accommodated within the projectile and also formation of lines of cleavage is facilitated and cleavage more positively initiated by pressure of explosives detonated within the projectile, at the same time that liability of cleavage by external pressures is minimised.

The head 19 is axially step bored as at 25 and affording a shoulder 26, the outer bore being interiorly threaded and receiving therein an externally threaded fuse base 27 snugly against the shoulder, the base having a reduced stem 28 engaged in the inner reduced part of the bore. The inner end of the stem is formed with a concentric thin walled interiorly threaded recess 29 into which there is screwed the open exteriorly threaded end of a cylindrical fuse case 30 of thin soft metal, closed integrally at its extremity and having a booster charge 31 at this closed end, to which leads a suitable delay fuse 32. An intermediate igniter explosive 33 may be introduced between the fuse and booster if desired. The fuse may be of a commercial type heretofore used for similar purposes or may be similar to grenade fuses or other forms known.

The outer end of the fuse base is bored to a distance short of the recess 29 as at 34, and a primer cup bore 35 is continued inwardly therefrom in which there is set a conventional percussion primer 36, a flash part 37' opening from the cup to the recess 29 and having the fuse 32 led therefrom in usual manner.

The bore 34 is substantially larger than the primer cup and has fitted slidably therein a firing pin 37 the point 38 of which is projected from the body of the pin in line with the primer. The pin may be reduced in diameter for a part of its length as at 39, but is fitted full size in the outer part of the bore 34 and beyond the base 27 slightly. The outer face 41 of the fuse base when the latter is screwed home lies inwardly of a symmetrical geometrical projection of the end surface of the head 19, and the end of the pin 37 lies approximately at this projected surface. The bore 34 is rabbeted at its outer end as at 40. The outer end portion of the firing pin has a transverse hole 42' therethrough, and a soft metal wire cotter 42 is engaged through the hole and across the rabbet, resting on the end face of the base 27 to hold the firing pin at the outer limit of its movement, or initial and normal position.

The depth of the rabbet 40 is less than the initial space between the point 38 and primer 36. The periphery of the base 27 is relieved as at 43 forming a circular boss on the base, its sides being under cut and having the flange edges of a thin soft metal cover cap 44 crimped thereinto.

The base 27 outwardly of the cup has spanner wrench sockets 45 therein for screwing the base into place in assembly.

The space within the body of the secondary projectile 17 is filled with a suitable explosive 46 adapted to be detonated by the booster charge 31 of the fuse. And may consist of TNT tetryl, or other approved explosive suitable for one of the desired functions of the secondary projectile. In some cases the filling may be an incendiary material, in others it may be an illuminating flare or a combination of flare and incendiary material.

The cotter 42 is so formed that shoulders 47 on the pin engage outwardly of and against each side of the body of the firing pin when the cotter is inserted so that opposite extremities lie over the outer end face of the fuse base.

After assembly of the secondary projectile with the proper constitutents, the whole body and head of the device is encased in a sheath of lead 50, which may be of such thickness as to cushion the secondary projectile and its contents from the shocks of concussion incident to detonation of the main bursting charge of a bomb in which it may be set, and also to cushion shocks incident to collision of the secondary projectile with masonry, steel work and the like, or by impact upon the secondary projectile of flying fragments of the parent shell or parts of demolished material.

This lead case 50 may be from one eighth to one quarter of an inch thick, more or less, as experience may show to be necessary. Other materials than lead and other than metal may be used for the encasement 50 as found available and suited to the need.

In the preparation of a bomb or high explosive projectile in accordance with my invention, the case or shell 10 is filled with the main bursting charge while the latter is in liquid form, and a grouping of my secondary projectiles is suspended or supported within the shell 10 during this filling in the proper position relative to each other and to the shell 10 as determined in accordance with the purposes disclosed herein, and are so held until the main charge has become set and solidified so as to be able to retain and support the secondary projectiles in their places.

In the placing of the projectiles 17, these are preferably grouped in such manner that the center of gravity of the completed bomb or projectile 10 is kept as low as practicable—that is—toward the nose 12, and while it is practicable to locate a few of the secondary projectiles near the tail even without any others elsewhere in the bomb 10, without materially disturbing the proper flight of the latter, it is preferable, especially in the smaller bombs, to follow a practice which will lower rather than raise the center of gravity of the assembled bomb.

By materially lowering the center of gravity of a bomb with my added projectiles 17, the angle of the axis of the bomb to the horizontal will earlier reach ninety degrees than is normal, and a lower bombing height may be practicable, when desired.

By one procedure I have arranged the secondary projectiles in a series of vertically spaced groups as indicated in Figures 1, 4, 5, and 6.

In the placing of the projectiles in each group I have arranged them in a concentric series, with the number in the series successively less in the upper ones, so that the mass represented in the metal of my secondary projectiles will be mainly in or near the nose of the bomb.

In addition, I also arrange the several series in such relation to the products of explosion of the adjacent portions of the explosive 16 that the members of each group, upon detonation of the main charge, will be thrown upward and outward from the axis of the bomb on approximate trajectories different from the trajectories approximated by the secondary projectiles in each of the other groups. This results in covering a given area with a good spread of action of the secondary projectiles, rather than throwing them all to a similar distance and producing only a ring of secondary action.

Assuming that the projectile 10 in Fig. 1, is a 500 pound bomb, the secondary projectiles could be arranged approximately as illustrated if made

actually about the size illustrated in Fig. 2. In this weapon eight of the secondary projectiles are placed in a concentric series 51 near the base of the ogival curve 52 of the nose and with their centers of gravity in a plane normal to the longitudinal axis of the body 10. The members of this series are spaced near the wall 11, and clear of the booster charge 15 and also spaced uniformly from each other. If desired this first series may be located higher in the bomb, so as to be above the booster 15, this being a matter of discretion or to be determined by trial to secure desired effects. Some of the members of the group may also be located at higher levels in centrifugally balanced number.

A second group 53 of secondary projectiles is shown spaced longitudinally above the first group, in which six members are shown, and these are arranged nearer the axis of the bomb, while a third group 54 of four secondary projectiles is shown spaced longitudinally still further above, and located closer to the common axis of the several groups.

Owing to the greater amount of explosive that is disposed inwardly of the members of the first group than is located within the other groups, this first group will be subject to larger components of horizontal force acting outwardly from the direction of the common center, and will have lower or flatter trajectories, than those in the other groups. The components of horizontal force decrease progressively in the succeeding upper groups, so that, with the additional amounts of explosive acting upwardly beneath the successive groups above, correspondingly greater elevations of the trajectories of these groups is produced. The focusing effect of the thickened wall portions of the nose of the bomb case, as well as supporting effect from earth or other partly penetrated material will preserve a good elevation of flight of all the projectiles 17. Differences in the angles of departure of the respective groups are generally suggested by the lines and arrows 55, 56, and 57 respectively for the groups beginning with the foremost group in Fig. 1. Other and additional groups of secondary projectiles may be introduced, and larger numbers of the secondary projectiles, or fewer, may be included.

The uses of bombs and other projectiles carrying high explosive materials are well understood, and will not be described herein.

Upon landing and detonation of a main or parent projectile carrying my secondary projectiles, a demolition effect will be produced corresponding to that of the conventional high explosive projectile, accompanied or not by destruction due to fragmentation of the main shell case, according to its construction. At the same time with the main explosion, the secondary projectiles will be subjected at all sides to high pressures by gases evolved within the main explosion and these gases will deform and press inwardly the lead sheath 50 and cap 44, moving the firing pin 37 inwardly and bending the cap metal and pin 42 into the annular recess formed by the rabbet 40 around the firing pin, until portions of the pin at each side of the firing pin are sheared between the inner edge of the rabbet 40 and the outer edge of the hole 41 through the firing pin. The firing pin continues its movement and is driven into the primer 36 firing the fuse train 32. At the same time, the secondary projectiles are thrown radially to various distances so that they enter breaches of walls and the like; or are scattered within a building structure through

the roof of which the main projectile may have penetrated, so that they will in part reach beyond the immediate demolition area, or will fall among machines, structure, etc.

During the detonation of the main charge 16 and flight of the secondary projectiles, they may be struck by flying fragments of various kinds which, without the protective sheath of lead 50 might produce destructive shocks to the shell of the small projectiles. But due to the plastic nature of lead, yet with its measure of resistance to strain these shocks are absorbed as well as the initial concussion of detonation of the main charge 16 itself, and the devices 17 saved from damage or premature detonation.

The period of delay in the fuse of my secondary projectile must take into account the flight time value of the trajectory formed by the secondary projectile resultant on explosion of the primary charge 16, and possibly, also, a time for rolling or richochet so that the secondary projectile may reach material at the lower part of debris. The total delay will depend to a large extent on the propelling effectiveness of the main charge consequent on the grouping of the secondaries in the primary projectile. Upon detonation by their respective fuses, they may act in close relation, if not immediate contact, with many pieces of equipment which may have escaped direct damage in the main explosion, adding to the destructive effect of an attack.

Debris will protect much material from damage by the main or succeeding demolition bombs of conventional form, while my secondary members will be scattered through and under the debris and with sufficiently delayed detonation will damage material from beneath where it might otherwise escape serious damage and be readily returned to enemy use after uncovering.

In other situations my secondary projectiles will scatter fragments from all directions from points far beyond the particular point of landing of the main projectile, making it difficult for personnel to obtain adequate cover.

These functions of my invention will be specially valuable against matériel, as in dispersal areas of air force concentrations and parks of motorized forces.

In addition my invention will produce effective action even when the main projectile falls without the zone of maximum effectiveness around target as the secondary projectiles will be thrown beyond that zone in all directions, increasing the chances of effective damage.

While I have shown and described my invention with particularity in its best construction within my knowledge, it will be understood that this is purely exemplary, and that various changes in the structure arrangement and combination of parts involved, including substitution of materials and equivalents mechanical or otherwise may be made without departing from the spirit of the invention as set forth in the appended claims.

I claim:

1. In an explosive projectile, a main bursting charge, a plurality of secondary projectiles completely embedded in said main charge as a supporting matrix, each secondary projectile comprising a hollow body of fragmentizable material and containing an explosive charge, a delay action fuse extending into said explosive charge, including a primer and firing pin, said pin having a portion extending to a point adjacent the periphery of said body, and a shell of yielding

cushioning material completely inclosing said body and having a portion adjacent the firing pin constructed and arranged to yield in response to the force of the explosion of the main bursting charge to operate said pin to cause the explosion of the secondary projectile.

2. In an explosive projectile, a main bursting charge, a plurality of secondary explosive projectiles completely embedded in said main charge as a supporting matrix, each secondary projectile being provided with a delay action fuse including a primer and a firing pin, said firing pin extending to a point adjacent to the periphery of the body of said secondary projectile, and a continuous unbroken shell completely inclosing said projectile, said shell yielding in response to detonation of said main charge to contact and actuate the firing pin to explode the secondary projectile.

3. In an explosive projectile, a main bursting charge, a plurality of secondary explosive projectiles completely embedded in said main charge as a supporting matrix, each secondary projectile comprising a hollow body, an explosive charge in said body, a delay action fuse in said body extending into said charge, said fuse being provided with a base extending to a point adjacent the periphery of said body, said fuse including a primer and a sliding firing pin, a plate of flexible material engaging the firing pin, and a shell completely surrounding said body and said plate, and having a flexible portion adjacent the firing pin and responsive to the force of the explosion of said bursting charge whereby said firing pin is actuated to ignite the charge in the secondary projectile upon the explosion of said main charge.

4. An explosive projectile comprising a main shell body containing a main explosive charge, and a plurality of secondary explosive projectiles completely embedded in and supported by said main charge, each said secondary projectile comprising, a hollow secondary body having an explosive charge therein, a fuse positioned within

the charge in said secondary body and secured within an opening in the wall of said secondary body, and a continuous unbroken sheath of cushioning material surrounding and enclosing said secondary body and fuse, said fuse including a firing pin operated by deformation of said sheath in response to detonation of said main explosive charge.

5. In an explosive projectile, a shell body having a central longitudinal axis and containing a main explosive charge, and a plurality of secondary explosive projectiles completely embedded in and supported solely by, said main explosive charge, said secondary projectiles being arranged in a plurality of series, said series lying in respective planes normal to and spaced along said axis, the projectiles of each series being symmetrical about said axis, the projectiles in each series decreasing in number from the nose of said shell body, the radial distance from said axis of the projectiles of the respective series, decreasing from the nose of said shell, whereby on detonation of said main explosive charge, said secondary projectiles are dispersed substantially uniformly over an area.

GARLAND L. HARRELL.

REFERENCES CITED

The following references are of record in the file of this patent:

UNITED STATES PATENTS

Number	Name	Date
174,325	Tyler	Feb. 29, 1876
1,284,148	Saladiner	Nov. 5, 1918
1,791,716	Davis et al.	Feb. 10, 1931
2,361,955	Moore et al.	Nov. 7, 1944

FOREIGN PATENTS

Number	Country	Date
22,786	Great Britain	1914