(12) UK Patent Application (19) GB (11) 2 215 843 (13) A

(43) Date of A publication 27.09.1989

(21) Application No 8806767.3

(22) Date of filing 22.03.1988

(51) INT CL⁴
G01B 7/03

(52) UK CL (Edition J)
G1M MFAB M11F M12C

(56) Documents cited
GB 2112141 A GB 2039048 A

(58) Field of search
UK CL (Edition J) G1M MFAA MFAB MFAC MFAD, G1N NAGA
INT CL⁴ G01B

(71) Applicant
Vsesojuzny Nauchno-Issledovatelsky I Konstruktorsky Institut Sredstv Izmerenia V Mashinostroenii (Vniiizmerenia)

(Incorporated in the Soviet Union)

13 Novoalexeevskaya ulitsa, Moscow, Soviet Union

(72) Inventor
Igor Borisovich Karpovich

(74) Agent and/or Address for Service
A A Thornton & Co
Northumberland House, 303-306 High Holborn, London, WC1V 7LE, United Kingdom

(54) Contact sensing probe

(57) A probe e.g. for a measuring machine, comprising a body (1) accommodating a disk (2) locked-in with a stylus (3) provided with a contact tip (4), and three elastic elements (5) made as bands or rods equidistantly spaced around a circumference whose centre coincides with an axis (6) of the stylus (3). Each of the elastic elements (5) is secured with one of its ends to the disk (2) and with the other end, to the body (1), and connected to a transducer (8) for transforming the amount of displacement of the contact tip into an electric signal. The body (1) comprises stops (9) equal in number to the elastic elements (5), each of the stops (9) and the respective elastic element (5) being arranged so as to contact each other when the contact tip (4) is in its initial (rest) position, a force being developed which bends the elastic elements (5) whereby an identical degree of curvature is attained.

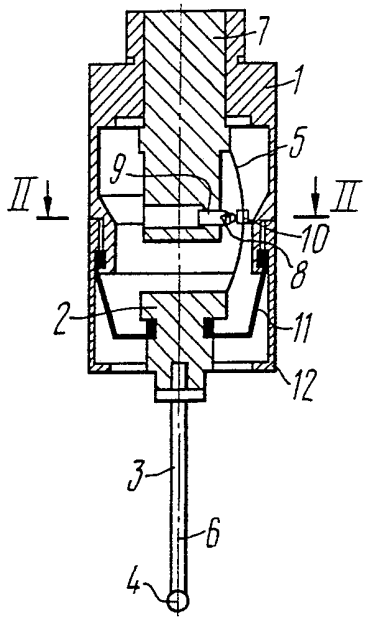

FIG. 1

This print takes account of replacement documents submitted after the date of filing to enable the application to comply with the formal requirements of the Patents Rules 1982.

GB 2 215 843 A

2215843

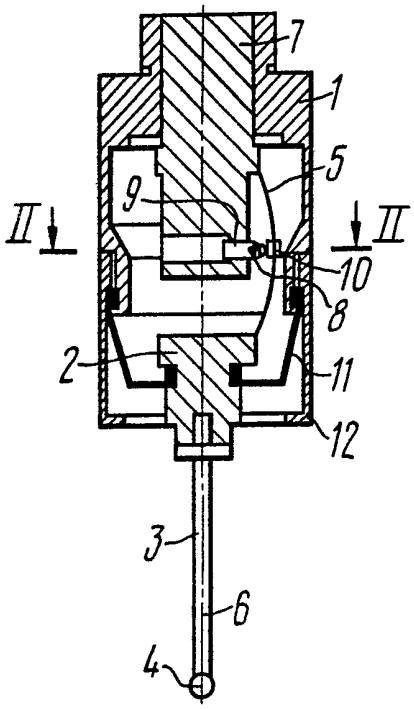

FIG. 1

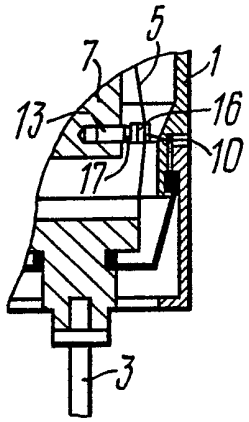

FIG. 3

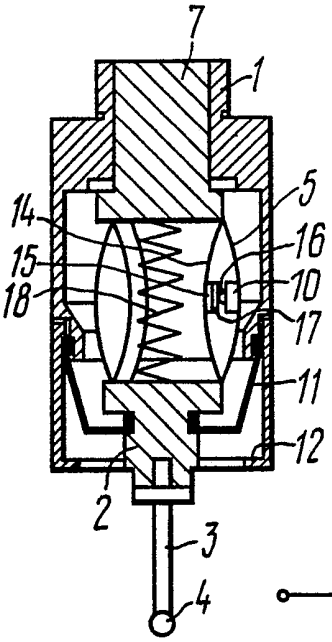

FIG. 4

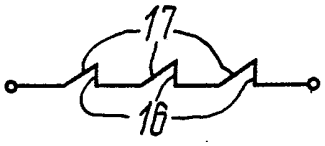

FIG. 5

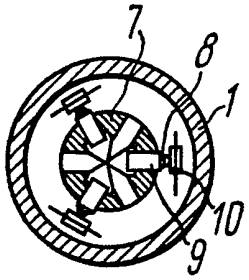

FIG. 2

2215843

CONTACT SENSING PROBE

The present invention relates generally to measuring apparatus and more specifically, to contact sensing probes.

The invention can be used to advantage when employed in mechanical engineering and other industries where there is a need for checking dimensions of machined workpieces, particularly in coordinate measuring machines, numerically controlled lathes or machining centres.

Widely used at present are fully automated manufacturing systems designed for machining workpieces under conditions of limited attendance on the part of the operator. This involves a major problem of how to maintain a specified machining accuracy in the course of unmanned operation. The above-mentioned problem can be solved through the employment of contact sensing probes which enable workpieces to be checked for proper size either directly on the machine tool or in a measuring machine linked to the machining process through feedback. It becomes clear that the contact sensing probe is an essential member determining the accuracy of measurement of workpieces.

The accuracy of measurements performed by means of contact sensing probes is determined by a host of factors such as friction between members making part of the probe construction, the total transmission ratio of these members, rigidity of elements incorporated in the probe structure, and their dependance on temperature strains, or on the number of contact pairs as is the case with probes of the electric contact type, etc. Of these numerous factors, the total transmission ratio and friction are the most important.

Known in the present state of the art is a contact sensing

probe comprising a plate fixedly secured to its body and provided with a hole axially arranged therethrough. The plate supports three pairs of balls made of a current-conducting material and arranged symmetrically with respect to an axis passing through a stylus provided with a contact tip. The stylus is secured to a disk which carries three pins made of a current-conducting material and disposed at an angle of 120° to each other. When in the initial (rest) position, the pins contact the balls at six points whereby an electric circuit of six contact pairs is formed. The necessary contact is ensured by a spiral spring fitted between the body and disk. When an axisl or side force is applied to the contact tip causing its displacement, contact betwden the pins and balls is disturbed and the electric circuit breaks open. As soon as the force is relieved, the disk returns to its initial position.

The aforementioned probe features a transmission ratio of the displacement of the contact tip and the pin-to-ball contact pair less than unity, being also disadvantageous due to friction at points where the contact pairs engage each other, as well as their numerous number, which reduces probe reliability and impairs the probing accuracy.

Another prior-art contact sensing probe is known to comprise a suspension fashioned substantially as a solid S--member having a reduced cross-section determining the axes of rotation for the components of the suspension as the latter undergoes elastic deformations. Each of the coordinate axes requires its own S-member so that a three-axes probe comprises three S-members.

A stylus having a contact tip passes through the central portion of the suspension and is secured to it on its periphery. The peripheral portions of the suspension have two contact pairs supported therebetween and engageable with each other under the action of a spiral spring whereby an electric circuit is formed.

Probes of this construction are devoid of friction between contacts. However, the construction itself proves to be too sophisticated and the transmission ratio of the displacement of the contact tip to that of the contact pair, is still less than unity. The probe incorporates six contact pairs, which reduces its reliability and probing accuracy.

Still another contact sensing probe known presently comprises a body accommodating a disk secured to a stylus provided with a contact tip, and three elastic elements adapted to transform the displacement of the contact tip into an electric signal by means of a transducer, said elastic elements being fashioned as bands or rods arranged uniformly over a circle having a centre thereof coinciding with the axis of the stylus, each of said elements having one of its ends secured to the disk, and the other end, secured to the body and connected to a transducer for transforming the amount of displacement of the contact tip into an electric signal.

In the latter of the contact sensing probes described hereinbefore each of the transducers transforming the displacement of the elastic element into an electric signal is made as a piezoelectric transducer which is fixedly secured to the body and to one of the ends of the respective elastic element.

According to such a construction, the elastic elements serve as members providing no transmission from the disk to the piezoelectric transducers. By virtue of the fact that the transmission ratio of the contact tip of the stylus to the disk is less than unity, the total transmission ratio from the stylus to the piezoelectric transducer is also less than unity, which, as mentioned hereintofore, reduces probing accuracy. Besides,for the purpose of locking the stylus and contact tip in the initial (rest) position, the probe is provided with additional elastic elements disposed at right angles with respect to the basic elastic elements, or with balls contained in centre-locating grooves provided in the body, or bellows having one of its ends secured to the body, and the other end, to the disk. Provision of these additional elements renders the construction rather complicated.

The essence of the invention resides in the fact that in a contact sensing probe comprising a body accommodating a disk locked-in with a stylus provided with a contact tip, three elastic elements adapted to transform the amount of displacement of the contact tip into an electric signal fed in a displacement transducer, which are made substantially as bands or rods equidistantly spaced around a circumference whose centre coincided with an axis of the stylus, each of said elements having one of its ends secured to the disk, and the other end, to the body, and connected to the transducer for transforming the amount of displacement of the contact tip into an electric signal; the body is provided with

stops arranged therein and equal in number to the elastic elements, each of said stops and the respective elastic element being so arranged as to contact each other when the contact tip is in its initial (rest) position, a force being developed which bends the elastic elements whereby the same degree of curvature is attained.

It is expedient that in a contact sensing probe, when the contact tip is in its initial (rest) position, the elastic elements be so bent that an angle confined between lines tangent to any one of the elastic elements at a point where one of its ends is secured and at a point of contact with the respective stop, be larger than 0° and smaller than 30°.

It is advantageous that in a contact sensing probe, when the contact tip is in its initial (rest) position, each of the stops contacts the respective elastic element lengthwise the central portion of the elastic element.

It is favourable that in a contact sensing probe, the stops be locked in position in the body.

It is effective that in a contact sensing probe, the stops be mounted with a possibility to travel radially with respect to the axis of the stylus thereby adjusting the degree of curvature of the elastic elements.

It is reasonable that the contact sensing probe should comprise three additional elastic elements held jointly with the main elastic elements, through one of their ends, to the disk, while through the other ends, to the body to form pairs, the stops being interposed between the elastic elements of each pair, thus bending the elements in opposite directions, the stops being held to one of these elements.

It is also expedient that in a contact sensing probe, each of the transducers for transforming the amount of displacement of the contact tip into an electric signal be made substantially as an electric contact pair whose one contact is secured on the elastic element, and the other contact, on the respective stop.

The herein proposed contact sensing probe provides an increase in probing accuracy and simplifies the probe construction.

In what follows the present invention will now be disclosed in a detailed description of an illustrative embodiment thereof with reference to the accompanying drawings, wherein:

FIG. 1 is a general longitudinal sectional view of a contact sensing probe, according to the invention;

FIG. 2 is a section taken on the line II-II in FIG. 1;

FIG. 3 is a fragmentary view of a body and disk, with a stop locked in position in the body, according to the invention;

FIG. 4 is a general diagrammatic longitudinal sectional view of a contact sensing probe provided with pairs of elastic elements, according to the invention;

FIG. 5 is an electric circuit diagram of contact pairs in a contact sensing probe, according to the invention.

A contact sensing probe comprises a body 1 (FIG. 1) accommodating a disk 2 locked-in with a stylus 3 provided with a contact tip 4. The body 1 mounts three elastic elements made as bands or rods. According to the described herein embodiment, the elastic elements are fashioned as bands equidistantly spaced

around a circumference, as seen particularly in FIG. 2, having a centre thereof coinciding with an axis 6 of the stylus 3, each of said elastic elements having one of its ends secured on the disk 2 and the other end attached to a flange 7 which is locked-in with the body 1.

Each of the elastic elements 5 is connected to its own transducer 8 for transforming the displacement of the contact tip into an electric signal. The transducers 8 employed in the embodiment described herein are essentially piezoelectric transducers.

Provision is made in the probe for stops 9 equal in number to the elastic elements 5, each of said stops being arranged in relation to the respective elastic element 5 in such a way that these members contact each other when the contact tip 4 is in the initial (rest) position whereby a force is developed which bends the elastic elements 5 so that an identical degree of curvature is attained. According to the embodiment described herein, bending occurs in a direction perpendicular to the axis 6 of the stylus 3, and the stops 9 are mounted with a possibility to travel radially with respect to the axis 6 of the stylus 3 thus adjusting the degree of curvature of the elastic elements 5, the stops being made as screws fitted in the flange 7. The piezoelectric transducers are supported on these screws, while the elastic elements 5 are provided with projecting surfaces 10 to ensure contact with the piezoelectric transducers.

The probe is sealed by a protection enclosure 11 which is made, for example, of rubber and provided with a cover 12

for the purpose of ensuring against the ingress of chip produced in the course of machining the workpieces to be checked.

It is expedient that, when the contact tip 4 is in its initial (rest) position, the degree of curvature of the elastic elements 5 be such that an angle α confined between lines tangent to each of the elastic elements 5 at a point where one of its ends is secured and at a point of contact with the respective stop 9, be within the range of $0 < \alpha < 30°$. Within this range, the transmission ratio of displacement from the contact tip 4 to the transducers 8 reaches its maximum value. As the angle α increases up to 45°, the transmission ratio decreases and it becomes less than unity if the angle α exceeds 45°.

When the contact tip 4 is in its initial (rest) position, as seen particularly in FIGs 1 and 2, each of the stops 9 contact the respective elastic element 5 lengthwise the central portion of the elastic element 5, which enables contact forces of equal magnitude to be developed between the elastic elements 5 and the stops 9, whereby the same accuracy of probing is provided along any of the three directions coinciding with the axes of the stops 9.

According to an alternative embodiment of a contact sensing probe, the stops 13 (FIG. 3) are fixedly secured on the flange 7 whereby a specified angle α is maintained within the range mentioned above.

For the purpose of increasing the transmission ratio two times, as compared to an embodiment represented parti-

cularly in FIG. 1, the contact sensing probe comprises three additional elastic elements 14 (FIG. 4) made similarly as bands or rods. The elastic elements 14 are held jointly with the main elastic elements 5 through one of their ends, to the disk 2, and through the other ends, to the flange 7 so that contact pairs are formed. Each of the stops 15 is interposed between the elastic elements 5,14 of the respective contact pair thus bending them in opposite directions, the stops being held to one of those elements.

To simplify the design of the contact sensing probe, the transducers 8 for transforming the displacement of the elastic elements into an electric signal are fashioned as electric contact pairs, each of these pairs having one contact 16 thereof (FIGs 3,4) arranged on the respective elastic element 5, particularly on its projecting surface 10, and the other contact 17 secured on the respective stops 13 (FIG. 3) or 15 (FIG. 4).

To increase the contact force between the contact tip 4 (FIG. 4) and a surface of the component to be measured, a cylindrical helical spring 18 is provided in the body 1, between the flange 7 and the disk 2. According to the aforementioned embodiments as represented in FIGs 3,4, all the electric contact pairs formed by the contacts 16 (FIG. 5), 17 are connected in series to form an electric circuit to be further connected to a numerical control system of the machine tool (not shown in the drawing).

The herein proposed contact sensing probe operates as follows.

When the contact tip 4 (FIG. 1) contacts the surface to be checked (not shown in the drawing), the disk 2 is displaced from its rest position. As this takes place, at least one of the elastic elements 5 undergoes additional bending in a longitudinal direction whereby its degree of curvature and initial angle α are changed. Said additional bending breaks the contact between the elastic element 5 and the stop 9 so that the respective piezoelectric transducer responds to such an additional bending action by sending a control signal to the numerical control system of the machine tool. Further movement of the contact tip 4 causes the elastic elements 5 to be bent additionally in a longitudinal direction, which enables the contact tip 4 to be moved freely over considerable lengths.

The probing accuracy, being dependent on the transmission ratio greater than unity, can be varied from one measurement to another, when the stops 9 made as screws are mounted so as to be movable radially with respect to the axis 6 of the stylus 3, or it can be maintained invariable, when the stops 13 (FIG. 3) are fixedly secured on the flange 7 of the body 1.

A contact sensing probe according to an embodiment illustrated in FIG. 1, operates in a manner similar to that described above.

When the transducers for transforming the displacement of the contact tip 4 into an electric signal are made as electric contact pairs having the normally closed contacts 16 (FIG. 5), 17, the breaking of at least one of them results in that an electric signal is generated in the circuit and is delivered to the numerical control system of the machine tool.

As soon as measurement is over and the contact tip 4 (FIGs 1,4) ceases to be in contact with the surface to be checked, the elastic elements 5 (FIG. 1), 15 (FIG. 4) are urged to return to the rest position until they contact the stops 9 (FIG. 1), 15 (FIG. 4).

Thus, the herein proposed contact sensing probe improves the probing accuracy due to increased transmission ratio of the displacement of the contact tip to the piezoelectric transducers or the electric contact pairs. Provision of elastic elements arranged in pairs allows the probing accuracy to be increased two times as compared to constructions where single elastic elements are used.

WHAT WE CLAIM IS

1. A contact sensing probe comprising a body accommodating a disk locked-in with a stylus provided with a contact tip, the body incorporating three elastic elements adapted to transform the amount of displacement of the contact tip into an electric signal fed to a displacement transducer, which elements are made substantially as bands or rods spaced equidistantly around a circumference whose centre coinsides with an axis of the stylus, each of said elastic elements having one of its ends secured to the disk, and the other end, to the body and connected to the transducer for transforming the amount of displacement of the contact tip into an electric signal; said body being provided with stops equal in number to the elastic elements, each of the stops and the respective elastic element are so arranged as to contact each other when the contact tip is in its initial (rest) position, a force being developed which bends the elastic elements whereby an identical degree of curvature is attained.

2. A contact sensing probe as claimed in Claim 1 wherein, when the contact tip is in its initial position, the degree of curvature of the elastic elements is such that an angle confined between lines tangent to any one of the elastic elements at a point where one of its ends is secured and at a point of contact with the respective stop is larger than 0° and smaller than 30°.

3. A contact sensing proce as claimed in Claims 1 or 2 wherein, when the contact tip is in its initial position, each of the stops contacts the respective elastic element lengthwise the central portion of the elastic element.

4. A contact sensing probe as claimed in Claims 1 to 3 wherein the stops are locked in position in the body.

5. A contact sensing probe as claimed in Claims 1 to 3 wherein the stops are mounted with a possibility to travel radially with respect to the axis of the stylus, thereby adjusting the degree of curvature of the elastic elements.

6. A contact sensing probe as claimed in Claims 1 to 3 wherein there are provided additional elastic elements equal in number to the main elastic elements and held jointly with the main elements through one of their ends, to the disk, and through the other ends, to the body to form pairs, the stops being interposed between the elastic elements of each pair, thus bending the latter elements in opposite directions, the stops being held to one of these elements.

7. A contact sensing probe as claimed in any of the Claims 1 to 6 wherein each of the transducers for transforming the amount of displacement of the contact tip into an electric signal, is made substantially as an electric contact pair whose one contact is secured on the elastic element and the other contact, on the respective stop.

8. A contact sensing probe made substantially as described above with reference to the accompanying drawings.

Published 1989 at The Patent Office, State House, 66/71 High Holborn, London WC1R 4TP. Further copies may be obtained from The Patent Office. Sales Branch, St Mary Cray, Orpington, Kent BR5 3RD. Printed by Multiplex techniques ltd, St Mary Cray, Kent, Con. 1/87