Sept. 20, 1938. H. SEBELL 2,130,676

CAN

Filed June 4, 1937 2 Sheets-Sheet 1

Fig.1.

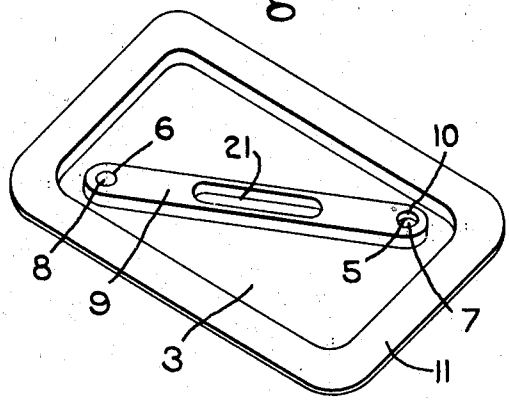

Fig.4.

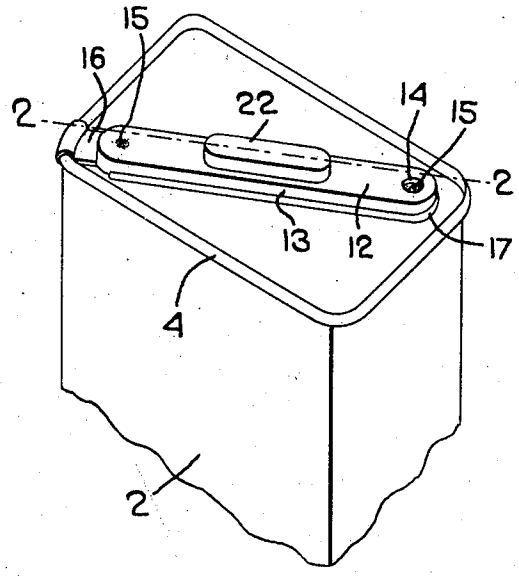

Fig.2.

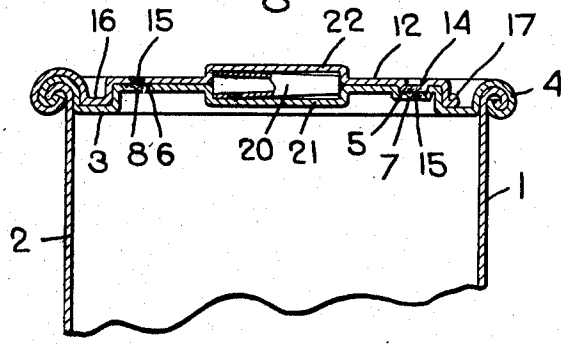

Fig.5.

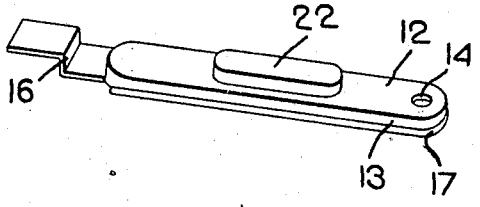

Fig.3.

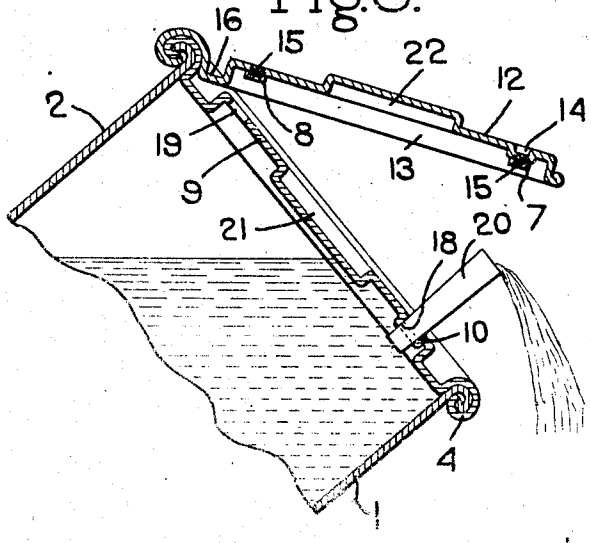

Fig.6.

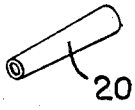

Inventor.
Harry Sebell
by Heard Smith & Tennant.
Attys.

Sept. 20, 1938. H. SEBELL 2,130,676

CAN

Filed June 4, 1937 2 Sheets-Sheet 2

Fig.7.

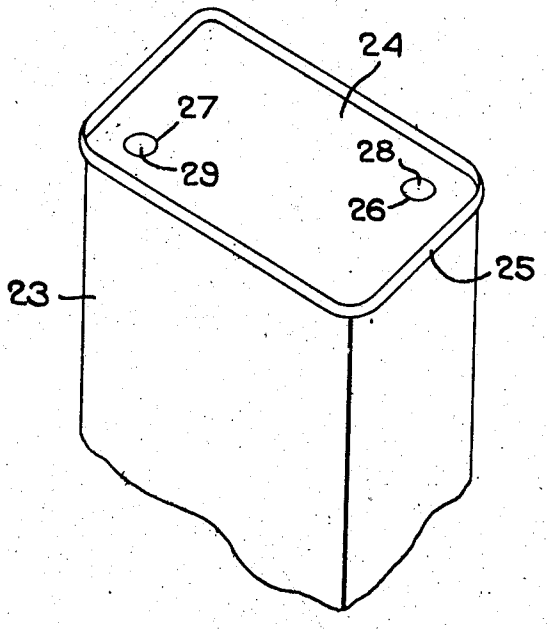

Fig.8.

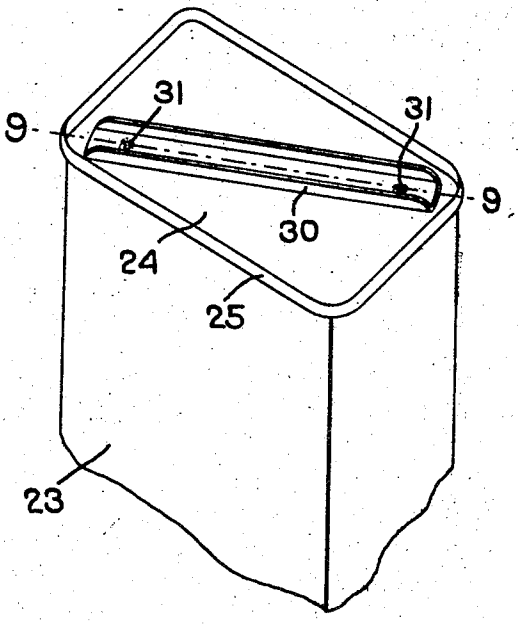

Fig.9.

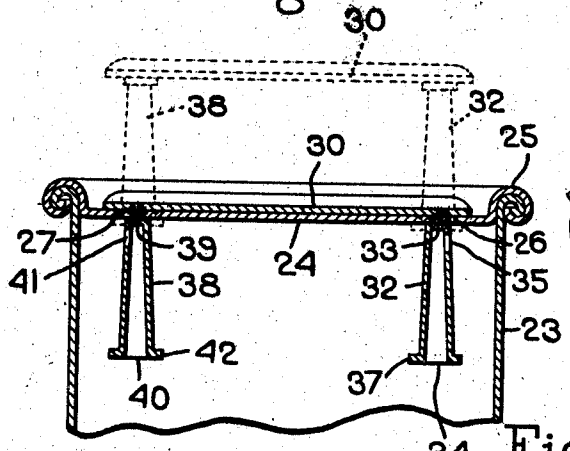

Fig.10.

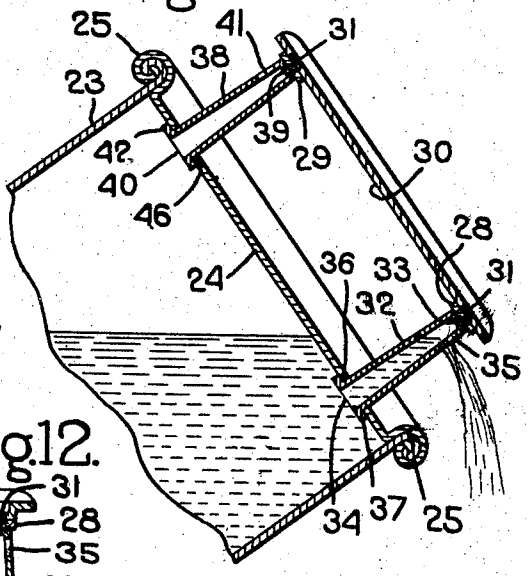

Fig.11.

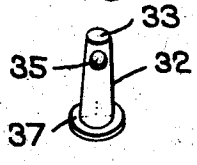

Fig.12.

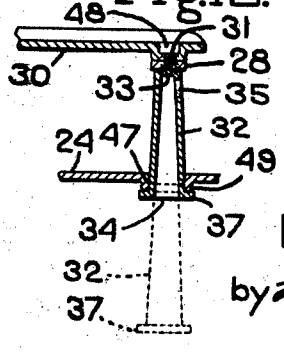

Inventor:
Harry Sebell
by Heard Smith & Tennant.
Attys.

Patented Sept. 20, 1938

2,130,676

UNITED STATES PATENT OFFICE

2,130,676

CAN

Harry Sebell, Boston, Mass., assignor of one-half to Arthur H. Parker, Lexington, Mass.

Application June 4, 1937, Serial No. 146,380

4 Claims. (Cl. 221—23)

This invention relates to cans of the type illustrated in my co-pending application Serial No. 141,064, filed May 6, 1937. The can illustrated in said application is formed in one end with two lines of weakness, each of which defines a tear-out portion, and a cover member in the form of a strip is secured to the can and spot-welded to the two tear-out portions so that when a pulling force is applied to the cover strip the tear-out portions will be torn from the can end along the lines of weakness thereby forming a pouring opening and a vent.

It is one of the objects of my present invention to provide a can of this type which is so made that after the can has been opened by tearing out the tear-out portions to provide the pouring opening and the vent opening there will be provided a pouring spout associated with the pouring opening and through which the contents of the can may be discharged.

When a can having the construction shown in my above-mentioned application is being discharged of its liquid contents such contents flow over the edge of the can. This will result in soiling the edge of the can, and if the contents of the can are only partially discharged there will be a small accumulation of the liquid contents of the can on the top of the can after the pouring opening and vent opening have been closed. This is an annoyance especially where the contents of the can is some liquid that is used in house kitchens for cooking purposes and the like, because it requires that each time that a small portion of the contents of the can is used in any cooking operation it becomes necessary to wipe the can top after the pouring opening has been closed.

My invention provides a novel spout construction which projects from the pouring opening after the can has been opened and through which the contents of a can may be discharged, said spout being so constructed that the stream flowing therefrom will be delivered entirely beyond the edge or corner of the can so that a small amount of the liquid contents of the can may be poured out without soiling the top of the can.

In order to give an understanding of my invention I have illustrated in the drawings some embodiments thereof which will now be described after which the novel features will be pointed out in the appended claims.

In the drawings:

Fig. 1 is a perspective view of a can end from which a can embodying my invention may be made;

Fig. 2 is a sectional view on the line 2—2, Fig. 4;

Fig. 3 is a sectional view of the can after it has been opened and showing the contents being discharged therefrom;

Fig. 4 is a fragmentary perspective view of a can constructed as shown in Figs. 1 and 2;

Fig. 5 is a perspective view of the cover strip;

Fig. 6 is a perspective view of the pouring spout;

Fig. 7 is a fragmentary perspective view of a can partially completed and embodying a different form of the invention;

Fig. 8 is a perspective view of the can after it has been completed;

Fig. 9 is a section on the line 9—9, Fig. 8, showing in dotted lines the cover strip raised and the tear-out portions torn free from the can to form the pouring opening and the vent opening;

Fig. 10 is a sectional view also on the line 9—9 Fig. 8 but showing the contents of the can being discharged from the pouring spout;

Fig. 11 is a perspective view of the pouring spout;

Fig. 12 is a fragmentary sectional view showing a slightly different embodiment of the invention.

Referring first to the construction shown in Figs. 1 to 6, 1 indicates a can having a body portion 2 and a can end 3 which is secured to the body portion in any suitable or usual way as by means of the lock seam 4 formed by rolling together a seaming flange 11 with which the can end is provided and a mating seaming flange at the upper end of the can body. The can end 3 constitutes the top end of the can. Before the can end 3 is secured to the can body 2 it will be formed with two lines of weakness 5 and 6, each line of weakness enclosing or defining a tear-out portion. The tear-out portion defined by the line of weakness 5 is indicated at 7 and that defined by the line of weakness 6 is indicated at 8. In the construction shown in the drawings the can end 3 is deformed to present the elongated upstanding portion 9, and the lines of weakness 5 and 6 are formed at opposite ends of this elongated upstanding portion. The upstanding portion 9 is shown as formed at one end with a depression or recess 10 and the line of weakness 5 is formed in the bottom of this recess 10, preferably at the corner thereof.

12 indicates a cover member adapted to fit over the raised portion 9, said cover member being elongated and having a U shape in cross section, the vertical side walls 13 of the cover member preferably fitting the walls of the raised

portion 9 with a tight friction fit. This cover member is provided with a depressed part 14 adapted to fit into the recess 10 and which forms a friction plug closure for the pouring opening after the latter is formed. During the process of manufacturing the can this cover member 12 is fitted over the raised portion 9 and is spot-welded to the two tear-out portions 7 and 8 as indicated at 15.

This cover member 12 is secured to the can in some suitable way, and as herein shown it is formed initially with a tab 16 which is rolled into the double-lock seam 4 at the time that the can 3 is seamed to the can body.

To open the can the cover member 12 is pried or forced off from the raised portion 9 of the can end, which can be done by applying a prying force to the end 17 thereof, and as the cover member is spot-welded to the tear-out portions 7 and 8 the separation of the cover member from the raised portion 9 of the can end will tear these tear-out portions 7 and 8 free from the can end along the lines of weakness 5 and 6, thereby forming a pouring opening 18 and a vent opening 19. The tab 16 constitutes a hinge member which hingedly connects the cover member to the can.

As stated above, a feature of the present invention is the provision of a pouring spout which projects from the pouring opening 18 after the latter has been formed, and through which the contents of the can may be discharged. In the construction shown in Figs. 1 to 6 this pouring spout is indicated at 20 and it is in the form of a tube of a size to fit into the pouring opening 18 as shown best in Fig. 3. This tube may conveniently be slightly tapered in shape so that when its smallest end is inserted in the opening and the tube is pressed downwardly into the opening it will find a firm seat against the walls of the pouring opening. With this pouring tube or spout in place the liquid contents of the can can be discharged without danger that some portion thereof will run over and collect on the top of the can.

It is, of course, important that this pouring spout should be furnished with the can and should be available whenever the can is to be opened, and for this purpose I propose to make the raised portion 9 of the can end with a spout-receiving depression 21 and to also make the cover member 12 with a recess 22 on its under face which mates with the recess 21 when the cover is in closed position. These two recesses 21, 22 form a chamber of a size to receive the pouring spout 20 as shown in Fig. 2.

When the can is opened by prying the cover member 12 free from the raised portion 9, thereby to form the pouring opening 18 and vent opening 19, the pouring spout will then be accessible and can be inserted into the pouring opening 18 as shown in Fig. 3, thereby forming a spout through which the liquid contents of the can can be poured. The pouring spout is long enough so that the liquid which is discharged from the end thereof will flow over and outside of the edge 4 of the can as best seen in Fig. 3, and thus none of the liquid will be flowing over and in contact with the top and edge 4 of the can.

When the desired amount of liquid has been delivered from the can then the spout member 20 may be removed from the pouring opening and replaced in the recess 21 and the cover member 12 may then be closed, thereby closing both the pouring opening and the vent opening, and in closing the pouring opening the depressed part 14 of the cover member fits into the recess 10 and thereby functions as a plug closure for said opening. The recess 10 has the further advantage that the side walls thereof provide a greater extent of bearing surface for the spout when it is inserted into the pouring opening than is afforded merely by the edge of an opening formed in a flat wall.

In Figs. 7 to 11 I have shown a different embodiment of the invention wherein the pouring spout is normally situated on the inside of the can and is connected to the cover member, so that when the can is opened by raising the cover member the pouring spout will be drawn up into the pouring opening thus formed.

In this embodiment of the invention the can body is indicated at 23 and the can end at 24, said end being secured to the body in any suitable way as by means of the double-lock seam 25. The can end is made with two lines of weakness 26, 27, each of which defines a tear-out portion, that defined by the line of weakness 26 being indicated at 28 and that defined by the line of weakness 27 being indicated at 29. 30 indicates a cover member or cover strip which overlies the two tear-out portions 28, 29 and which is spot-welded to both as indicated at 31. This cover strip 30 may be of any suitable construction and I have herein shown it as of a channel shape with the legs of the channel directed upwardly. One purpose in making it of this shape is to give it the required stiffness so that it will not buckle when the prying force is applied thereto for tearing the tear-out portions 28, 29 from the end of the can. In this embodiment of the invention the pouring spout is a tubular member 32 which is closed at one end as shown at 33 and is open at the other end at 34. The closed end 33 of the pouring spout 32 is permanently secured to the tear-out portion 28 on the inside of the can, and this may conveniently be done by spot-welding said end 33 to the tear-out portion at the same time that the cover member 30 is spot-welded to the tear-out portion on the outside of the can.

When the cover member 30 is pried loose from the can, thereby to tear the tear-out portion 28 from the can end 24, the pouring tube 23 will be drawn upwardly into the opening 36 as shown in dotted lines, Fig. 9, thereby carrying the discharge port 35 through and above the top of the can. I will preferably make the pouring tube 28 with a flange 37 at its lower end in order to prevent the tube from being withdrawn entirely from the opening 36. When the pouring tube 32 has been pulled upwardly into the opening 36 to a point where the flange 37 engages the under side of the can top, the discharge port 35 will be located sufficiently above the top of the can so that the contents of the can can be poured out through the tube 32 and the discharge port 35 without contacting with the can top or the edge 25 thereof.

I will preferably provide a second tube 38 similar to the tube 32 and having a closed end 39 which is spot-welded to the tear-out portion 29 on the inside of the can, said tube 38 being open at its lower end 40 and having a port 41 adjacent its closed end. The lower end of this tube 38 is also flanged as shown at 42. When the closure 30 is pried loose from the can end to tear out the tear-out portions 28, 29, then said member may be raised vertically into the dotted line position thereby drawing both tubes 32 and 38 into the openings formed in the top of the can. When the cover member is thus raised into the dotted

line position either tube 32 or 38 may be used as the pouring spout and the other tube will always act as a vent. In Fig. 10 the can is being tipped toward the right so that the contents of the can are being discharged through the tube 32, and in this case the port 41 and tube 38 constitute a vent for admitting air to the can as the liquid contents are discharged. If the can were tipped toward the left then the tube 38 would function as a pouring tube and the tube 32 as a vent tube.

When the required amount has been discharged from the can then the cover member may be forced downwardly against the can top thereby closing the openings 36 and 46.

The can may be opened at a subsequent time by merely raising the cover member 30 into its elevated position, and after each pouring the can may be closed by simply forcing the cover member down into engagement with the can top.

When the cover member is in its raised position shown in dotted lines Fig. 9, it may be used as a handle for carrying the can.

The construction shown in Fig. 12 is similar to that shown in Figs. 9, 10 and 11 except that the can end 24 is formed with a recess similar to the recess 15 in Figs. 1 to 4, and the line of weakness which circumscribes the tear-out portion 28 is formed at the bottom of the recess in the corner thereof. The cover member 30 is also formed with a depressed portion 48 similar to the depressed portion 14 of the cover member in Figs. 1 to 3, which depressed portion 48 fits the recess 47.

With this construction when the cover has been raised and the tear-out portion 28 has been torn out of the bottom of the recess there will be formed a hole in the can end 24 surrounded by the downturned flange 49, and the inner wall of this flange will provide a tight friction fit with the pouring tube 32 when the latter is raised into its operative position shown in Fig. 12.

I claim:

1. A can having an imperforate integral wall provided with two lines of weakness, each of which defines a tear-out portion forming an integral part of said wall, and a cover member overlying and permanently secured to both tear-out portions, whereby when said cover member is pried loose from the can the tear-out portions will be torn out along the lines of weakness thereby forming two openings, one of which is a vent opening and the other of which is a pouring opening that is adapted to receive a pouring spout.

2. A can having in one wall thereof two lines of weakness, each of which defines a tear-out portion, a cover member overlying and permanently secured to said tear-out portions and by which they may be torn loose from the can, and a pouring spout permanently secured to one tear-out portion and adapted to be drawn into the opening formed when said tear-out portion is torn loose from the can thereby to form a pouring spout through which the contents of the can may be discharged.

3. A can having in one wall thereof two lines of weakness, each of which defines a tear-out portion, a cover member overlying and permanently secured to said tear-out portions and by which they may be torn loose from the can, and a pouring spout situated within the can and permanently secured to one of the tear-out portions, said spout being adapted to be drawn into the opening formed when said tear-out portion is torn loose from the can thereby to form a pouring spout.

4. A can having a recess in one wall thereof and also having two lines of weakness in said wall, each of which lines of weakness defines a tear-out portion forming an integral part of said wall, one of the lines of weakness being in the bottom of said recess, and a cover member overlying and permanently secured to both tear-out portions, said cover member being deformed to present a plug portion adapted to fit said recess, whereby when said cover member is pried loose from the can the tear-out portions will be torn out along the lines of weakness thereby forming two openings, of which the one in the bottom of the recess forms a pouring opening adapted to receive a pouring spout, the other opening forming a vent opening.

HARRY SEBELL.