A. B. DICK.

TYPE SETTING AND DISTRIBUTING APPARATUS.

APPLICATION FILED FEB. 9, 1912.

1,053,365.

Patented Feb. 18, 1913.

2 SHEETS—SHEET 1.

Fig. 1,

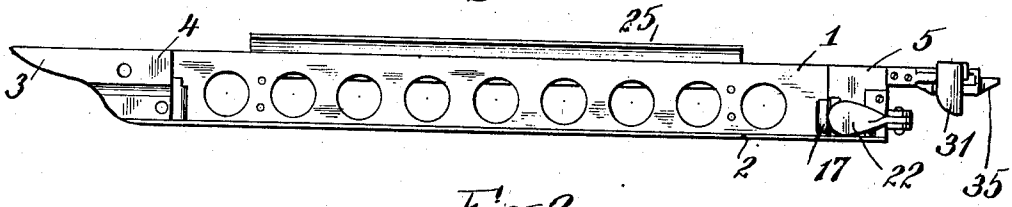

Fig. 2,

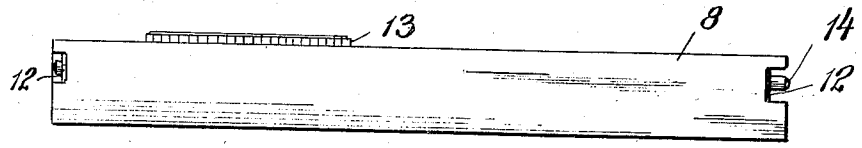

Fig. 3,

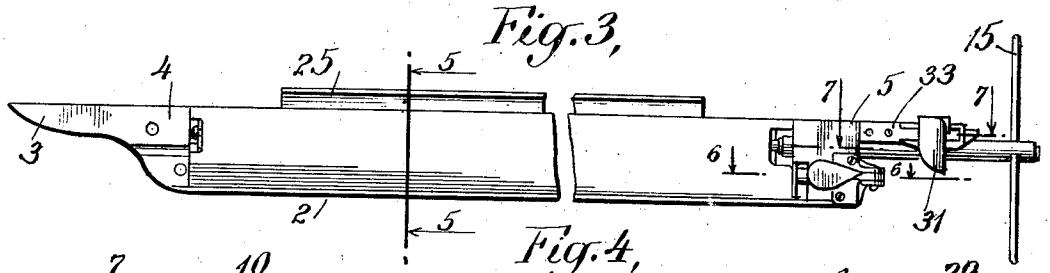

Fig. 4,

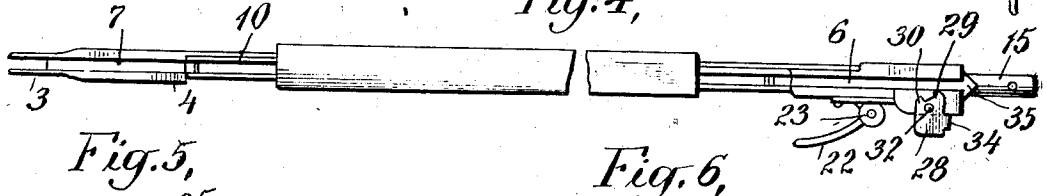

Fig. 5,

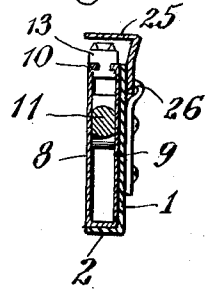

Fig. 6,

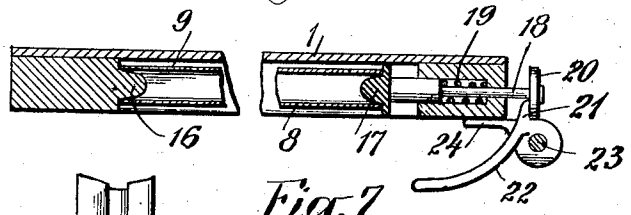

Fig. 8,

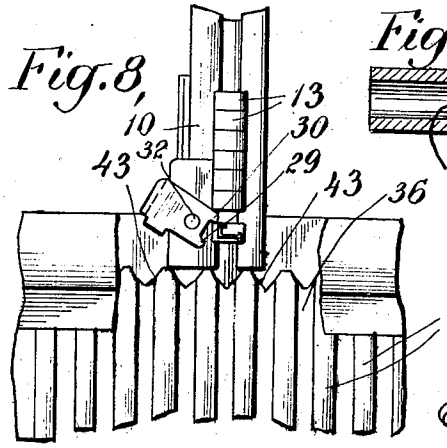

Fig. 7,

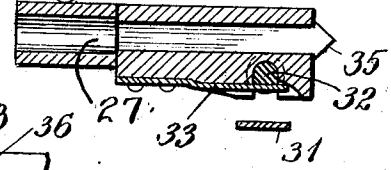

WITNESSES:

J. F. Collins

D. McIntosh

INVENTOR

Albert B. Dick

BY

Edmunds & Edmunds

ATTORNEY

A. B. DICK.

TYPE SETTING AND DISTRIBUTING APPARATUS.

APPLICATION FILED FEB. 9, 1912.

1,053,365.

Patented Feb. 18, 1913.

2 SHEETS—SHEET 2.

Fig. 9.

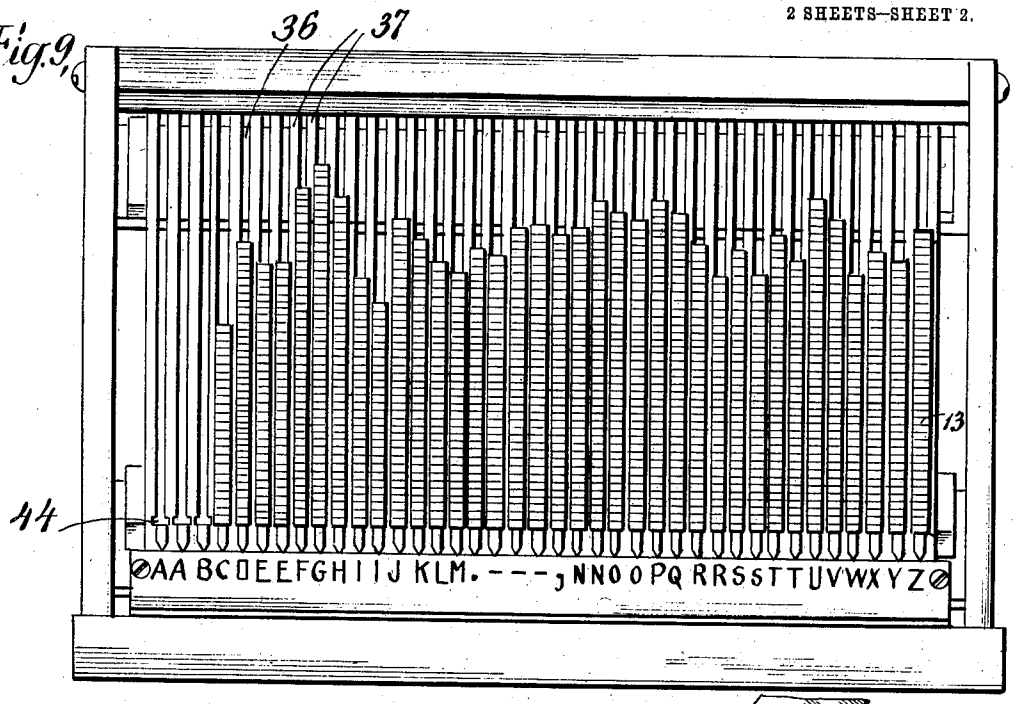

Fig. 10.

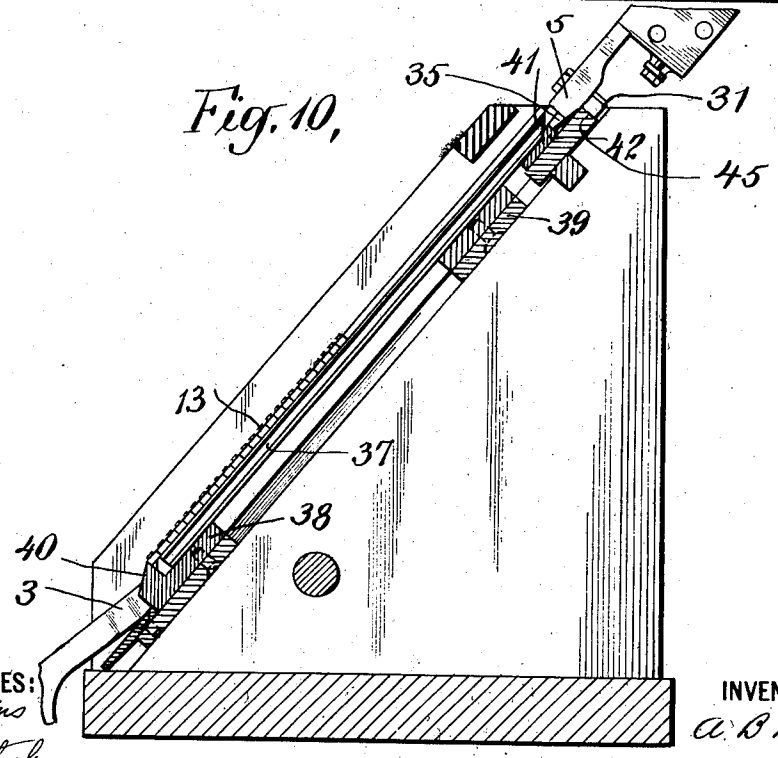

WITNESSES:

J. F. Collins

L. M. Intsch

INVENTOR

A. B. Dick

BY

Edmonds & Edmonds

ATTORNEY

UNITED STATES PATENT OFFICE.

ALBERT B. DICK, OF LAKE FOREST, ILLINOIS, ASSIGNOR TO A. B. DICK COMPANY, OF CHICAGO, ILLINOIS, A CORPORATION OF ILLINOIS.

TYPE SETTING AND DISTRIBUTING APPARATUS.

1,053,365. Specification of Letters Patent. Patented Feb. 18, 1913.

Application filed February 9, 1912. Serial No. 676,504.

To all whom it may concern:

Be it known that I, ALBERT B. DICK, a citizen of the United States, residing in Lake Forest, in the county of Lake and State of Illinois, have invented certain new and useful Improvements in Type Setting and Distributing Apparatus, of which the following is a specification.

This invention relates to apparatus for setting and distributing type and is directed particularly to the provision of apparatus of this character for use in connection with printing machines to be operated by unskilled persons such, for instance, as printing machines for office use in printing letters and circulars in imitation of typewritten work.

The object of the invention is to provide a simple mechanism for use in setting and distributing type which may be readily operated by an unskilled person, with which the type may be set up and distributed quickly and accurately and which may be manufactured at a low cost.

A further object of the invention is to provide apparatus with which type may be set up in, and distributed from, a type-holder which is adapted to be locked in a chase and used in printing. In this way, a transfer of the type from the device in which they are set up to the chase or to a holder adapted to be inserted in the chase and a similar transfer when it is necessary to distribute the type are avoided.

In accordance with the invention, a composing-stick is provided adapted to have a type-holder removably mounted therein. This type-holder is adapted to receive and support a single line of type and when the type are mounted upon the holder, the type and holder are type-high. Therefore, when the holder has had a line of type set up thereon, it may be inserted directly in a chase and used in printing. Similarly, in distributing the type, the holder with its line of type may be inserted in the composing-stick and the type distributed directly from the type-holder to the type-case. The composing-stick is specially formed so as to facilitate the setting up of type in, and the distributing of type from, the type-holder. At one end it is provided with tines between which is a slot alining with the slot of the type-holder. At its opposite end, the composing-stick is provided with an ejector by which one type at a time may be allowed to pass from the stick into a suitable case. This ejector is preferably spring actuated and it is so formed that it engages and is operated by a wall of the type-case when the composing-stick is brought into coöperative relation with the type-case.

The preferred embodiment of the invention is illustrated in the accompanying drawings, in which—

Figure 1 is an elevation of the composing-stick; Fig. 2 is an elevation of the type-holder; Fig. 3 is an elevation of the composing-stick with the type-holder therein; Fig. 4 is a top view of the stick and holder; Fig. 5 is a transverse section of the stick and holder on line 5—5 of Fig. 3; Fig. 6 is a horizontal section of the stick and holder on line 6—6 of Fig. 3; Fig. 7 is a detail sectional view on line 7—7 of Fig. 3; Fig. 8 is a view of the end of the stick and the edge of the type-case with which it coacts; Fig. 9 is a front view of the type-case; and Fig. 10 is a transverse section of the type-case having the composing-stick applied thereto.

Referring to these drawings, the composing-stick has a side wall 1 and a bottom wall 2, these two being formed from a strip of sheet metal. At one end, the stick is formed to provide tines 3 parallel to each other and forming between them a type receiving slot or channel. These two tines may be formed by portions of the same strip of sheet metal from which the side and bottom walls 1 and 2 of the stick are formed. If so, a block 4 of metal is preferably inserted within the folded piece of the metal from which the parts 1, 2 and 3 are formed, this block having the type receiving channel formed in its upper edge. Or the block 4 may be secured to the end of the strip of metal from which the walls 1 and 2 are formed and may have both the tines 3 and the type receiving channel formed therein. In the opposite end of the stick is secured a block of metal 5, this block also having a type receiving slot or channel 6 therein. This slot or channel and also the channel 7 between the tines 3 are undercut so as to receive and hold type of the shape illustrated in Fig. 5.

The composing-stick as thus constructed is adapted to receive and detachably sup-

port a type-holder. The construction of this holder is illustrated in Figs. 2 and 5. It consists of a single piece of sheet metal folded along lines extending lengthwise thereof to provide two parallel side walls 8 and 9 and at the upper edges of these side walls inwardly directed flanges 10. Between these flanges is a type receiving slot whereby the type-holder may support type in the manner shown in Fig. 5. These type have grooves in opposite sides thereof into which the flanges 10 project. The type-holder when bent to the shape illustrated in Fig. 5 is accurately finished so that the holder with a line of type thereon is type-high. By reason of this, the type-holder carrying a line of type may be inserted directly in a chase for use in printing. The piece of metal from which the type-holder is formed is under tension such that the sides 8 and 9 tend to move toward each other and thus cause the flanges 10 to grip the line of type tightly. The type will be so gripped and held except when the side walls 8 and 9 of the type-holder are spread in order to cause disengagement of the type. To effect such spreading of the side walls 8 and 9, a bar or cam 11 is provided. This cam extends lengthwise of the type-holder and at its ends is supported in bearings formed by turning portions of the metal of the side walls 8 and 9 inwardly, as shown at 12. The cam-bar 11 is of a cross-sectional shape approximating an oblong with the corners rounded. When the bar 11 is in the position in which it is shown in Fig. 5, the sides 8 and 9 of the type-holder are allowed to move toward each other until their flanges 10 grip the type 13 tightly. By turning the bar 11 through 90°, the sides 8 and 9 will be spread so as to enlarge the slot between the flanges 10. This will cause the type 13 to be held loosely in the slot in the type-holder so that the type may be moved freely in the direction of the length of the type-holder. In order to actuate the bar 11, one end 14 thereof projecting beyond its bearing is squared so as to receive a key 15.

In order to detachably mount the type-holder within the composing-stick, the latter is provided with stationary retaining means 16 at one end thereof and at the other with a detachable latch. The retainer 16 consists merely of a projection upon the block 4 of the composing-stick and near the bottom of the block as shown in Fig. 1. The end of the type-holder is adapted to fit over the projection 16, the side walls 8 and 9 lying one on either side of this projection. The latch 17 is located near the bottom of the stick as shown in Fig. 1 and is carried by a stud 18 passing through an opening in the block 5 of the composing-stick. A spring 19 is coiled about the stud 18 within this opening and acts normally to force the latch 17 to the position in which it is shown in Figs. 1 and 6. On the end of the stud 18 is secured a disk 20 adapted to be engaged by projection 21 on a lever 22 which is pivotally mounted at 23 upon a hinge member 24 secured to the block 5 of the composing-stick. By pressing the handle or lever 22 the stud 18 and latch 17 may be moved against the tension of spring 19. To mount a type-holder within the stick, one end of the type-holder is inserted over the projection 16 and then lever 22 is pressed to retract latch 17. The other end of the type-holder is then moved into the composing-stick and lever 22 is released, whereupon the latch 17 will be moved by spring 19 until it enters the adjacent end of the type-holder. The holder will thus be held securely within the stick. To remove a type-holder from the stick, the reverse of this operation is performed, the type-holder being taken out through the open side of the stick.

A shield 25 is pivotally mounted upon the side wall 1 of the composing-stick, as shown at 26. This shield is adapted to move to such a position that it overlies the printing faces of type in a holder mounted in the stick. This shield when so positioned, therefore, protects the hand of the operator from contact with the printing faces of the type.

The cam-bar 11 may be operated while the type-holder is mounted within the composing-stick. During the operation of setting up type, the type receiving slot in the holder would be enlarged so that the type may move freely therein. After the line of type has been set up, the key 15 is inserted through an opening in the block 5 shown at 27 in Fig. 7. The key will engage the end 14 of the bar 11 in the manner indicated in Fig. 3, so that the bar may be turned and the holder thus made to grip the type tightly before the type-holder with the line of type thereon is removed from the stick.

Pivotally mounted upon the block 5 of the composing-stick is an ejector 28. This ejector has projections 29 and 30 on one end thereof. At its opposite end it is provided with a depending arm 31. The ejector is carried by a stud 32 which is received in bearings formed in the block 5, as shown in Fig. 7. The stud 32 is cut away on one side. A leaf spring 33 is secured to the block 5 and bears at its end upon the stud 32 so as to normally hold the ejector in such a position that the spring will lie flat upon the flattened side of the stud. When the ejector has been moved to this position by spring 33, further movement of the ejector upon its pivot is precluded by a stud or projection 34 which engages the side of the block 5. The projections 29 and 30 directly overlie the upper face of the block 5 and extend in

close proximity to the type receiving channel in the block.

Upon the end of block 5 is a pointed projection 35 whose function is to position the composing-stick accurately with respect to a type-case as hereinafter described.

Referring now to Figs. 9 and 10, the form of type-case with which the composing-stick above described is adapted to be used, is shown as consisting of a plurality of parallel inclined type receiving channels 36. These channels are formed by bars 37 mounted at their lower ends upon a transverse bar 38, and at their upper ends upon a transverse bar 39. At the lower end of each type receiving channel is a thin projection 40 directly in line with the channel and serving to prevent type from moving in a straight line out of the lower end of the channel. Directly in front of each projection 40, the bars 36 are cut away slightly so as to form spaces 44 (Fig. 9) through which a single type may be raised vertically. At their upper ends, the bars 37 are cut upon an incline as shown at 41. Directly underlying these ends 41 of the bars 37 is a transverse bar 42, the upper edge of which is provided with a plurality of angular depressions, one for each type receiving channel in the type-case. These depressions are shown at 43 in Fig. 8. Another bar 45 is provided adjacent and parallel to the bars 39 and 42.

With the apparatus constructed as above described, the operation of setting and distributing type is as follows: An empty type-holder is placed in the composing-stick in the manner heretofore described and the bar 11 of that type-holder is turned so as to enlarge the type receiving slot. The operator then applies the tines 3 at one end of the stick at the lower end of a type receiving channel 36 in the type-case, the tines being inserted over the projection 40 at the lower end of the selected channel. The ends of the tines will thus be brought into engagement with the grooves in the sides of the lowermost type in the channel. The end of the stick may then be raised carrying the lowermost type upwardly with it through the vertical passage 44 at the lower end of the channel 36. The type thus picked out will move along in the type receiving slot and into the type-holder. One type after another may be picked up in this way, the various type having been selected by reference to the letters provided upon the frame of the type-case at the lower ends of the several channels. As the type move into the type-holder, they pass under the shield 25 so that the movement of the type will not be obstructed by the operator's hand and the operator's hand will not be soiled by contact with the printing faces of the type. After a line of type has been set up, the key 15 is applied to the end of bar 11 through the opening 27 in the block 5 of the stick and bar 11 is turned to the position in which it is shown in Fig. 5 so that the line of type in the type-holder will be gripped and held upon the type-holder. The type-holder may then be removed from the composing-stick by operating lever 22 to withdraw latch 17 and may be inserted directly in a chase. An empty type-holder is positioned within the stick and the operation of setting the type is proceeded with. When using the apparatus for distributing type, a type-holder with a line of type thereon is inserted within the composing-stick and the walls of the holder are spread so as to release the type by turning the cam-bar 11. The stick is then raised so that the type move within the type receiving channel until the end type engages and is arrested by the projection 30 of the ejector 28. The end of the stick is then applied to the type-case in such a relation that the type receiving channel in the stick is in line with a channel of the type-case, that channel of the type-case being selected which corresponds with the type at the end of the row in the stick. Positioning the composing-stick thus is facilitated by the provision of the pointed end 35 on the stick and the depressions 43 on the type-case. A channel of the type-case is selected by reference to the letters upon the case and then the end of the stick is moved down toward the upper end of this channel in the manner indicated in Fig. 10. As this is done, the projection 35 enters the proper depression 43 and centers the stick accurately with respect to the proper channel. As the stick is moved downwardly thus, the arm 31 of the ejector engages the upper edge of the bar 45 of the type-case and the ejector is turned on its pivot by the bar 45 against the tension of spring 33. This movement of the ejector is illustrated in Figs. 4 and 8. As the ejector so moves, the projection 29 thereon releases the lowermost type in the stick but the projection 30 engages the next type or engages between the two lowest type, so that only the lowermost type in the stick is allowed to pass out of the slot in the stick. After one type has been distributed into its appropriate channel in the case in this manner, the stick is raised and as this is done, the spring 33 moves the ejector 31 back to the position in which it is shown in Fig. 4, in which position the projection 29 on the ejector is again in engagement with the lowermost type in the stick. The stick may then be moved along into coaction with the channel in the type-case corresponding with the type in the stick which is then lowest and on lowering the stick into coaction with this channel the ejector will be again actuated as before to discharge another type. Setting up and distributing type in this manner involves numerous advantages. It will be

seen that the type are set up directly in a type-holder which, with the type thereon may be inserted directly in a chase, the type-holder with the type thereon being type-high. This type-holder is specially formed to facilitate gripping the line of type before the type holder is removed from the stick. Another advantage resulting from the use of this construction is that good impressions may be obtained when printing from type held by holders such as these here shown in cases where much inferior results would be obtained if type supported directly upon the platen of the machine were employed. In some cases, the platens of printing machines, particularly printing machines for office use, do not present a perfectly level surface, due to warping, accumulation of dirt or scarring. Notwithstanding any such irregularities, however, a line of type supported in the chase of a type-holder in the manner herein described will all be held accurately in line so that good results can be obtained in the printing operation.

The form of ejector herein illustrated and described is found to be very effective in practice. When the stick is manipulated in distributing type with a fair degree of rapidity, as it would be by one who had become accustomed to its use, the movement of the ejector actually ejects the type from the slot in the stick; it does not merely release a type and permit the latter to fall by gravity. This results in a quick movement of the type from the stick into its channel in the case and this impulse is given to the type merely as an incident to the lowering of the stick into coöperative relation with its appropriate type channel in the case.

Having described my invention, what I claim as new therein and desire to secure by Letters Patent of the United States is:

1. The combination of a composing stick having a type-receiving slot at one end thereof, a type-distributing slot at the other end in alinement with the receiving slot, and a space between said slots for the reception of a removable type-holder, and a type-holder having a type-receiving slot in the edge thereof, said holder being detachably mounted in said stick with its slot in alinement with the slots of the stick, substantially as set forth.

2. The combination of a composing stick having a type-receiving slot at one end thereof, a type-distributing slot at the other end in alinement with the receiving slot, and a space between said slots for the reception of a removable type-holder, a type-holder having a type-receiving slot in the edge thereof, said holder being detachably mounted in the stick with its slot in alinement with the slots of the stick, and means for distributing type mounted on the stick adjacent to said distributing slot, substantially as set forth.

3. The combination of a composing stick having a type-receiving slot at one end thereof, a type-distributing slot at the other end in alinement with the receiving slot, and a space between said slots for the reception of a removable type-holder, a type-holder located in said space and having a type-receiving slot in its edge and means on said stick for detachably engaging the holder to hold it in position with its slot in alinement with the slots in said stick, substantially as set forth.

4. The combination of a composing stick having a type-receiving slot at one end thereof, a type-distributing slot at the other end and open on one side between said slots for the reception of a type-holder, a removable type-holder in said stick having a type-receiving slot in its edge and clamping devices on the stick adapted to engage the holder and hold it in position on the stick with its slot in alinement with the slots in the stick, substantially as set forth.

5. The combination of a composing stick having a type-receiving slot at one end thereof, and a type-distributing slot in the other end in alinement with the receiving slot, and a space between said slots for the reception of a removable type-holder, a type-holder having a type-receiving slot in the edge thereof, said holder being detachably mounted in the stick with its slot in alinement with the slots of the stick, and a shield mounted on said stick and adapted to overlie the printing faces of the type in said removable holder, substantially as set forth.

6. The combination of a type-holder having a type-receiving slot therein and with the type therein being type-high, a composing stick open at one portion thereof to receive the holder, means for clamping the holder on the stick, type-receiving means at one end of the stick including tines between which is a slot alining with the slot in the holder, type-distributing means at the other end of the stick including a slot alining with the slot in the holder and a shield mounted on the stick and overlying the printing faces of the type in the holder, substantially as set forth.

7. The combination of a composing stick having a type-receiving slot at one end thereof, a type-distributing slot at the other end in alinement with the receiving slot, and a space between said slots for the reception of a removable type-holder, a type-holder located in said space and having a type-receiving slot in its edge in alinement with the slots in said stick, a retaining member on the stick coacting with one end of the holder, a movable clamping member on the stick coacting with the other end of the holder and an operating device for said clamping member, substantially as set forth.

8. The combination of a composing stick

having a type-receiving slot at one end thereof, a type-distributing slot at the other end in alinement with the receiving slot and a space between said slots for the reception of a removable type-holder, a type-holder having a type-receiving slot in its edge, said holder being detachably mounted in said stick with its slot in alinement with the slots of the stick, and means for causing the holder, while in the stick, to grip the type in the slot therein, substantially as set forth.

9. The combination of a type-holder having a type-receiving slot therein and with the type therein being type-high, a composing stick open at one portion thereof to receive the holder, means for clamping the holder on the stick, type-receiving means at one end of the stick including tines between which is a slot alining with the slot in the holder, type-distributing means at the other end of the stick including a slot alining with the slot in the holder, and means for causing the holder, while in the stick, to grip the type in the slot therein, substantially as set forth.

10. The combination of a composing stick having a type-receiving slot at one end thereof, a type-distributing slot at the other end in alinement with the receiving slot, and a space between said slots for the reception of a removable type-holder, a type-holder having a type-receiving slot in its edge, said holder being detachably mounted in said stick with its slot in alinement with the slots of the stick, and a pointed projection at the end of the stick adjacent to the type-distributing slot for positioning said end of the stick with respect to a type-receiving member, substantially as set forth.

11. A composing stick having a slot therein open at its end through which the type pass side by side and an ejector pivotally mounted upon the stick on an axis parallel to the length of the type in said slot and coacting with the type in the slot, said ejector being movable upon its pivot to permit one type to pass through the slot at a time, substantially as set forth.

12. The combination of a composing stick having a type-distributing slot at one end thereof and a space adjacent to said slot for the reception of a removable type-holder, a type-holder having a type-receiving slot in its edge, said holder being detachably mounted in the stick with its slot in alinement with the slot of the stick, and an ejector pivotally mounted on the stick adjacent to the type-distributing slot therein, substantially as set forth.

13. The combination of a composing stick having a type-receiving slot at one end thereof, a type-distributing slot at the other end in alinement with the receiving slot, and a space between said slots for the reception of a removable type-holder, a type-holder having a type-receiving slot in the edge thereof, said holder being detachably mounted in the stick with its slot in alinement with the slots of the stick, an ejector pivotally mounted upon the stick adjacent to the type-distributing slot thereof, a spring for actuating the ejector in one direction and a projection on the ejector adapted to be engaged to operate the ejector in the other direction, substantially as set forth.

14. The combination of a composing stick having a type-holding slot therein open at its end and an ejector pivotally mounted on the stick and coacting with the type in said slot, said ejector having an exposed portion adapted to engage a type-receiving member when the stick is moved toward the member and thus cause operation of the ejector to eject a type into said member, substantially as set forth.

15. The combination of a composing stick having a type-receiving channel therein open at its end, a type-case having a plurality of parallel type-receiving channels therein open at one end, and a movable ejector mounted on the stick, said ejector being adapted to engage the type-case and to be operated thereby to permit one type to pass through the channel in the stick, substantially as set forth.

16. The combination of a composing stick having a type-receiving channel therein open at its end, a type-case having a plurality of parallel type-receiving channels therein open at one end, an ejector pivotally mounted on the stick, and a spring for moving the ejector in one direction, said ejector being adapted to engage the type-case and to be operated thereby to permit one type to pass through the channel in the stick, substantially as set forth.

This specification signed and witnessed this 5th day of February, 1912.

ALBERT B. DICK.

Witnesses:
I. McIntosh,
J. F. Collins.