Jan. 17, 1967 J. H. FRENCH 3,298,063

EXTRUSION DIE CONSTRUCTION

Filed Sept. 4, 1964 2 Sheets-Sheet 1

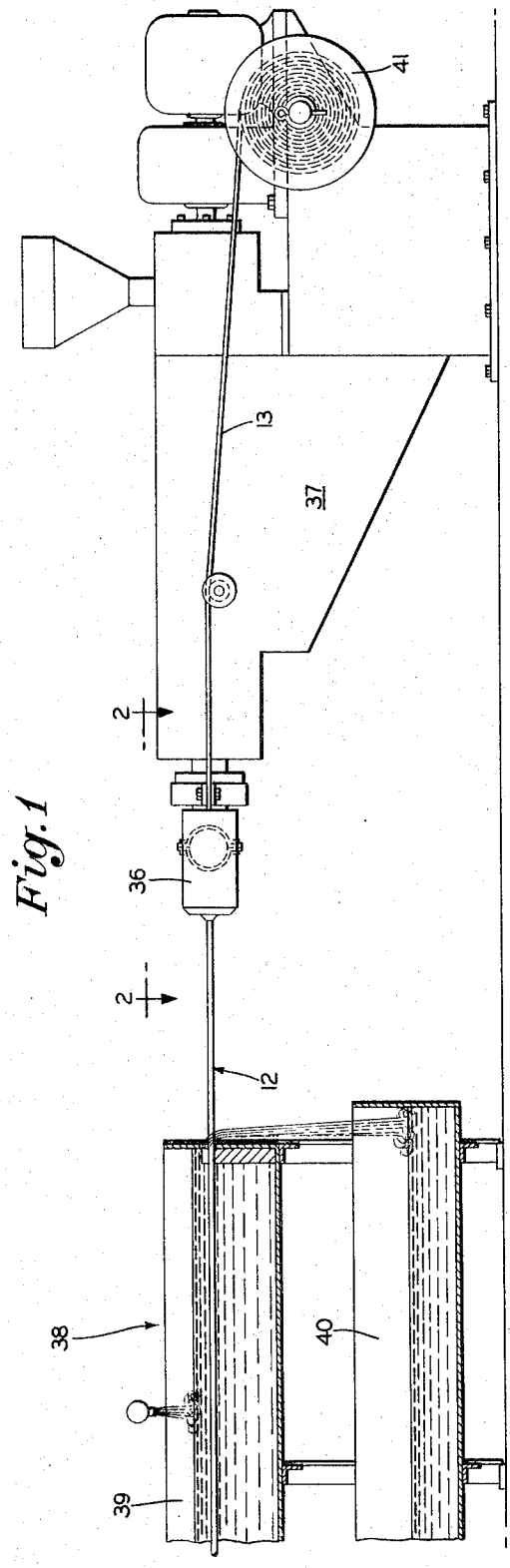

Fig. 1

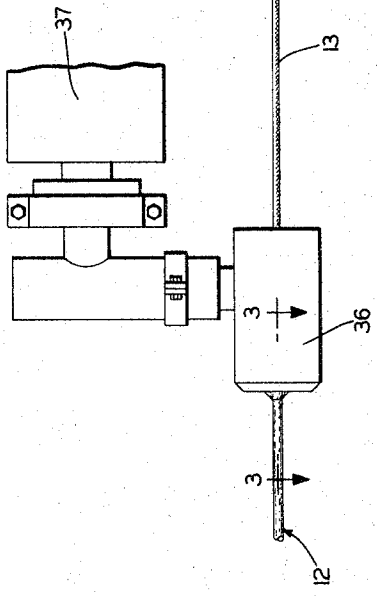

Fig. 2

INVENTOR.
John H. French
BY
Frease, Bishop, Johns & Schick
ATTORNEYS

Jan. 17, 1967 J. H. FRENCH 3,298,063

EXTRUSION DIE CONSTRUCTION

Filed Sept. 4, 1964 2 Sheets-Sheet 2

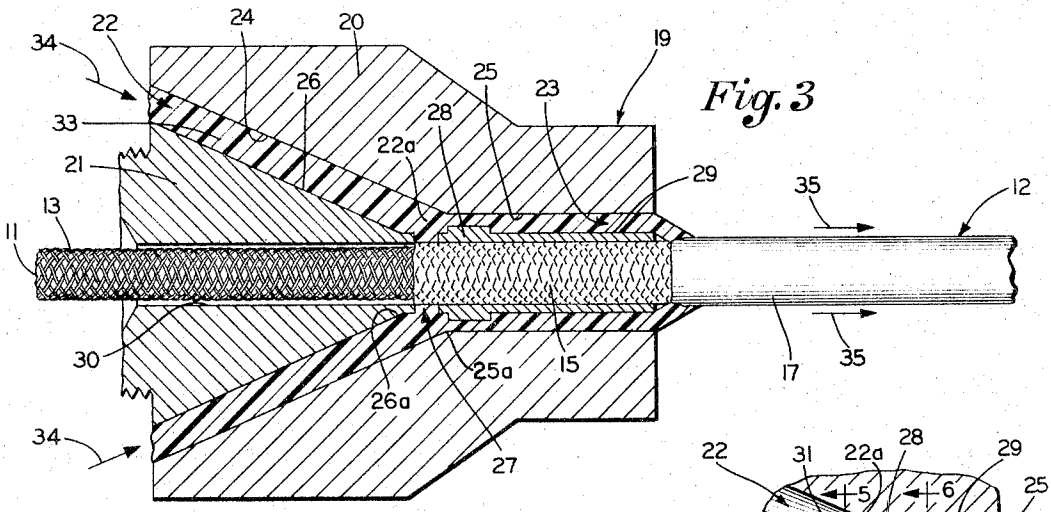

Fig. 3

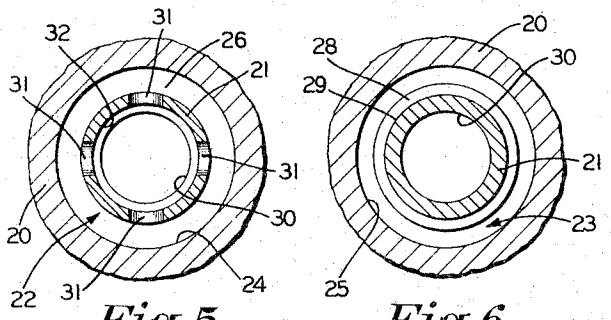

Fig. 5

Fig. 6

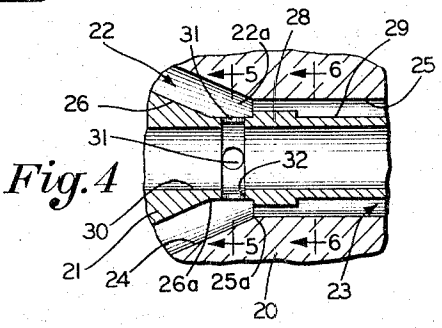

Fig. 4

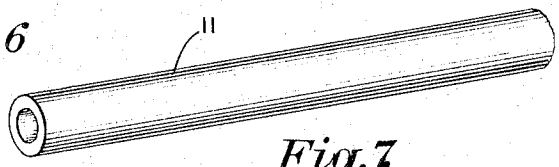

Fig. 7

Fig. 8

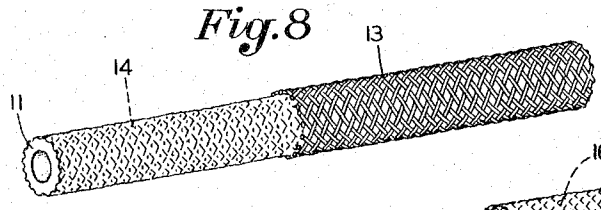

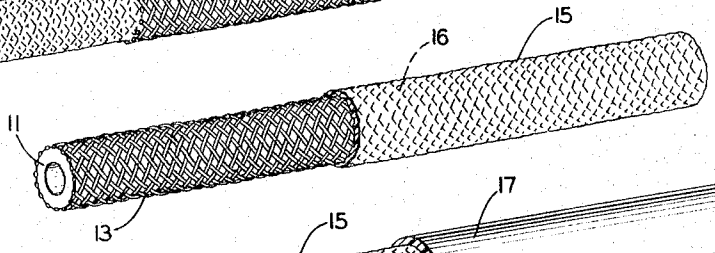

Fig. 9

Fig. 10

INVENTOR.
John H. French

BY
Frease, Bishop, Johns & Schick

ATTORNEYS

United States Patent Office 3,298,063 Patented Jan. 17, 1967

3,298,063

EXTRUSION DIE CONSTRUCTION

John H. French, Canton, Ohio, assignor to Merit Plastics, Inc., a corporation of Ohio

Filed Sept. 4, 1964, Ser. No. 394,497
3 Claims. (Cl. 18—13)

My invention relates generally to improvements in extrusion dies, and more specifically to an improved extrusion die which may be used for extruding tubular plastic covers over flexible drive casings of the type used to house the drive cables and provide a power transmission drive for the speedometers of motor vehicles. Even more specifically, my invention relates to an improved extrusion die construction for providing a two-stage plastic extrusion over flexible drive casings and the like, resulting in an improved flexible drive casing construction having superior physical properties over anything heretofore provided.

According to my co-pending application, entitled "Flexible Drive Casing Construction and Manufacture," Serial No. 230,432, filed October 15, 1962, now Patent No. 3,258,031, a new and improved form of flexible drive casing has been provided having physical properties far superior to the prior drive casing constructions, such as an enhanced and uniform flexibility, improved crush strength to resist kinking, and an improved ability to return to original shape when kinked. Furthermore, with this improved drive casing construction, by selective regulation and due to the particular elements thereof and the unique co-action and co-operation between these elements, it is possible to selectively vary these improved physical properties over a relatively wide range so as to provide flexible drive casings and the like having the particular necessary physical attributes for a series of different user, while still being able to manufacture the drive casings from the most satisfactory and long wearing materials at a minimum of cost.

Generally this improved drive casing construction of said co-pending application, Serial No. 230,432, is made up of an inner tubular, preferably thermoplastic, plastic material liner member which may be lubricant impregnated in order to provide self-lubrication for a drive cable ultimately to be installed therein. Further, this plastic material liner member is covered with a tubular, braided-strand reinforcing sheath which may be formed from braided wire or other braided strand materials, whether natural or synthetic, and depending on the final intended use of the complete casing construction.

Still further, an outer tubular, preferably thermoplastic, plastic material cover member is formed over this assembled braided sheath-covered inner liner member. Finally, and most important for providing the superior physical properties of the completed casing construction, the inner liner member and braided sheath and outer cover member are formed such that the braided sheath is partially embedded in each of the inner liner member and outer cover member, thereby providing a final strongly integrated casing construction having the physical attributes hereinbefore discussed.

In forming this improved flexible drive casing construction, the provision of the plastic inner liner member preferably by extrusion is not particularly difficult, and this is true whether or not the inner member is lubricant impregnated. It also is not particularly difficult to provide the braided sheath covering and partially embedded in the outer surface of the inner liner member, since the embedding may be accomplished and the degree of embedding controlled by the controlled tensioning of the sheath braided strands while the sheath is being formed over the inner liner member, and if necessary, the sheath

braiding may take place while the inner liner member is still hot and in at least a semi-plastic state, particularly where the desired degree of embedding cannot otherwise be provided.

It has been found, however, that in forming the outer cover member of the casing over the sheath-covered inner liner member, while still providing the wall thickness of cover member desired, and the maximum of embedding of the sheath strands in the outer cover member in order to provide the maximum integration and strength, while at the same time, maintaining a high degree of concentricity between the inner opening of the inner liner member and the outer surface of the outer cover member, it is most desirable and advantageous to from the outer cover member over the sheath covered inner liner member by two separate and distinct, but closely following, extrusion operations, and on a continuous extrusion basis. In this manner, it is possible to hot extrude a first layer plastic cover continuously over the sheath covered inner liner member under pressure, so that this first layer is relatively thin, and a maximum of complete embedding or flowing of the plastic material around the braided strands may be accomplished.

Then, by closely following the first layer hot extrusion while this first layer is still hot and in a plastic state, with a hot second layer plastic extrusion directly over this first layer, it is possible to provide an outer cover member of the desired thickness in which the two layers of the outer cover member are closely integrated, if not intermixed, and in which this outer cover member is tightly integrated with the sheath covered inner liner member. Also, by extruding the outer cover member in these two extrusions of less wall thickness, it is possible to much more closely control the overall wall thickness of the outer cover member, as well as the concentricity of the overall casing construction as previously discussed.

It has been found possible to perform this two-stage outer cover member extrusion by the use of separate but closely following extrusion dies. This method, however, requires the provision of, in many cases, two complete sets of extrusion equipment, and at least presents a distinct problem of providing and maintaining extremely close alignment between the separate extrusion dies if the required uniform wall thickness and concentricity of the final casing construction is to be provided.

It is, therefore, a general object of the present invention to provide an extrusion die construction for use in forming the outer cover member of flexible drive casings with which such outer cover member may be formed in two distinct, extruded, tubular layers, yet eliminating the difficulties and disadvantages with the prior methods.

It is a primary object of the present invention to provide an extrusion die construction for forming outer cover members on flexible drive casing with which a two-stage extrusion is accomplished by use of a unitary two-stage die, so that necessary alignment of the two extrusion stages is inherently maintained.

It is a further object of the present invention to provide an extrusion die construction for forming the outer cover members of flexible drive casings with which the cover member is formed as a two-stage extrusion using a single supply of plastic material, thereby insuring that the two cover extruded layers will be of the identical mixed plastic material so as to provide a finished outer cover member with the two layers thereof tightly integrated and preferably intermixed.

It is still a further object of the present invention to provide an extrusion die construction for forming the outer cover members of flexible drive casings with which these outer cover members are formed in two distinct extruding stages and the wall thickness of the first tubular extruded layer formed by the first stage is automatically

maintained through the unique construction of the two-stage die.

It is also an object of the present invention to provide a two-stage extrusion die construction for forming the outer cover members of flexible drive casings in which the distribution of plastic material between the two die extruding stages is automatically maintained for providing the two extruded cover layers of proper final wall thickness and of proper concentricity relative to the remainder of the casing construction.

It is an additional object of the present invention to provide a two-stage extruding die construction for forming outer cover members of flexible drive casings in which the plastic material for the first cover layer is automatically applied under proper pressure and the plastic material is properly distributed so as to securely embed the braided sheath of the casing inner liner member in this cover first layer during such extrusion.

Finally, it is an object of the present invention to provide an extrusion die construction satisfying all of the above objects in a relatively simple and efficient manner, and at a minimum of expense.

These and other objects are accomplished by the parts, constructions, arrangements, combinations and subcombinations comprising the present invention, a preferred embodiment of which—illustrative of the best mode in which applicant has contemplated applying the principles—is set forth in the following description and illustrated in the accompanying drawings, and which is particularly and distinctly pointed out and set forth in the appended claims forming a part hereof.

In general terms, the extrusion die construction of the present invention for extruding tubular plastic covers over flexible drive casings and the like may be stated as including inner and outer die portions with the inner die portion having a casing feed passage formed axially therethrough for the forward movement of the particular drive casing being covered through the die construction. Further, the construction includes an annular main plastic feed passage formed between the inner and outer die portions annularly surrounding the casing feed passage and terminating spaced outwardly from this casing feed passage.

Still further, the construction includes an annular first layer plastic feed passage formed through the inner die portion spaced from the forward end of this inner die portion and communicating between the termination of the main plastic feed passage and the casing feed passage. Also, the construction includes an annular second layer plastic feed passage formed at least partially between the inner and outer die portions communicating rearwardly with the termination of the main plastic feed passage and extending forwardly of the first layer plastic feed passage and communicating annularly with a forward part of the casing feed passage.

Finally, the construction includes the first and second layer plastic feed passages being so proportioned that plastic cover material in a plastic state forced through the main plastic feed passage will flow partially through the first layer plastic feed passage to form an annular extruded first layer plastic cover over the drive casing, and will flow partially through the second layer plastic feed passage to form an annular extruded second layer plastic cover over the first layer plastic cover.

By way of example, a preferred embodiment of the extrusion die construction comprising the present invention, an example of manufacturing equipment in which such die construction may be used, and an example of a flexible drive casing construction which may be manufactured by such die, are shown in the accompanying drawings forming a part hereof, wherein like numerals indicate similar parts throughout the several views, and in which:

FIG. 1 is a fragmentary side elevation, part in vertical section and somewhat diagrammatic, illustrating manufacturing equipment in which the extruding die construction

of the present invention may be used for performing the outer cover member extrusion of a flexible drive casing;

FIG. 2, an enlarged top plan view of part of the equipment of FIG. 1 taken in the location of the arrows 2—2 in FIG. 1;

FIG. 3, an enlarged sectional view, part in elevation, looking in the direction of the arrows 3—3 in FIG. 2 and showing the extrusion die construction of the present invention;

FIG. 4, an enlarged fragmentary sectional view, part in elevation, taken from FIG. 3 and more clearly showing a first stage extrusion portion of the die construction of FIG. 3;

FIG. 5, an enlarged fragmentary sectional view, part in elevation, looking in the direction of the arrows 5—5 in FIG. 4;

FIG. 6, an enlarged fragmentary sectional view, part in elevation, looking in the direction of the arrows 6—6 in FIG. 4;

FIG. 7, a fragmentary side perspective view illustrating an inner liner member of a flexible casing construction of the type with which the extrusion die construction of the present invention may be used for forming the outer cover member thereof;

FIG. 8, a fragmentary side perspective view illustrating the inner liner member of FIG. 7 with a braided sheath braided over the outer surface thereof and embedded in said outer surface, ready for the outer cover member extruding operation;

FIG. 9, a fragmentary side perspective view of the assembled inner liner member and braided sheath of FIG. 8 with the first or inner layer of the outer cover member extruded thereover, the braided sheath embedded in the inner surface of the outer cover first layer, and with braided sheath indentations or impressions in the first layer outer surface; and

FIG. 10, a fragmentary side perspective view of the assembled braided sheath an inner liner member of FIG. 8 with both the first or inner layer of the outer cover member extruded thereover and then the second or final layer of the outer cover member extruded over the first layer, providing the integrated, if not intermixed, two-layer outer cover member, preferably with a relatively smooth outer surface, as performed by the extrusion die construction of the present invention.

A representative integrated flexible drive casing construction which may advantageously have the outer cover member formed thereon by use of the extrusion die construction of the present invention is disclosed and claimed in my co-pending application entitled "Flexible Drive Casing Construction and Manufacture," Serial No. 230,432, filed October 15, 1962. Also, the method for forming this flexible drive casing construction including the forming of the outer cover member in two layers or stages, which may be accomplished by the extrusion die construction of the present invention, is disclosed and claimed in my co-pending application Serial No. 394,445, now Pat. No. 3,249,666 of May 6, 1966.

This representative drive casing construction is shown in FIGS. 7 through 10 of the present application drawings and may include an inner tubular plastic liner member 11, and outer tubular plastic cover member 12, and an intervening braided reinforcing sheath 13.

According to said co-pending applications, the inner liner member 11 may be formed in any usual manner, such as by hot extrusion, and the braided sheath 13, whether formed of wire or other materials, may be continuously braided around the inner liner member by the use of usual braiding machines. Furthermore, during the braiding of the braided sheath 13, the braided strands are preferably tensioned so as to partially embed these strands in the outer surface of the inner liner member or tube 11, as indicated by the broken lines 14 in FIG. 8.

Still further, the outer cover member 12 may then be hot extruded in a continuous extrustion operation over

the sheath covered inner liner member 11 in two stages, with the outer cover first stage 15 filling around the strands of the braided sheath 13 so as to embed the braided sheath in the inner surface of this outer cover first stage, and this first stage extrusion is preferably of a thickness so as to form the braided strand indentations 16 on the outer surface thereof as shown in FIGS. 9 and 10. The outer cover second stage 17 is hot extruded directly over the first stage 15 and preferably while this first stage is still in a hot and plastic state so that the second stage 17 tightly integrates and preferably intermixes with the first stage 15, and the finished drive casing construction may have the smooth outer surface 18.

Also as discussed in detail in said co-pending applications, it is important that the outer cover first stage 15 will be extruded under pressure so as to provide the maximum of embedding of the braided sheath 13 in this outer cover first stage, and it is further desirable to maintain the maximum of concentricity in the final casing construction between the inner opening of the inner liner member 11 and the outer casing surface 18, which is the outer surface of the outer cover member 12. Both of these advantageous features may be provided by applying the outer cover member 12 in the two stages 15 and 17 shown by use of the two-stage extrusion die construction of the present invention, which is shown in detail in FIGS. 3 through 6, and may be mounted in the equipment shown in FIGS. 1 and 2 for the accomplishment of this outer cover member extruding operation.

Referring to FIGS. 3 through 6, the two-stage extruding die of the present invention is indicated generally at 19 and includes an outer die member 20 having inlet and outlet ends formed with a central generally cylindrical bore 25 extending from the die outlet end and a conical portion 24 extending from the die inlet end flaring inwardly and intersecting the cylindrical bore 25 at a zone 25*a* located intermediate the die ends. The two-stage die also includes an inner die member 21 having inlet and outlet ends and inner die member 21 is formed with a central cylindrical plastic tube feed bore 30 extending between the die ends.

As shown in FIG. 3 inner die member 21 has a tubular wall 29 extending from the die outlet end and a conical portion having a conical outer surface 26 extending from the die inlet end flaring inwardly and intersecting tubular wall 29 at a zone 26*a* located intermediate the die ends.

Inner die member 21 is telescoped concentrically within outer die member 20 with conical surface 26 located in spaced complementary concentric relation to conical surface 24 forming a conical main feed passage 22. Also when die members 20 and 21 are in telescoped relation, the inner die tubular wall 29 is located in spaced complementary concentric relation to the outer die member cylindrical bore 25 and forms a secondary feed passage 23. The described intersecting zones 25*a* and 26*a* of die members 20 and 21 are located adjacent one another and form a terminal 22*a* for main feed passage 22.

Primary feed passage means 27 (FIG. 3) is formed in inner die member 21 adjacent inner die member intersecting zone 26*a*, communicating between main feed passage terminal 22*a* and central bore 30 of inner die member 21.

A radially outwardly extending diverter ring 28 is formed annularly around tubular wall 29 of inner die member 21 adjacent primary feed passage 27, and ring 28 extends into secondary feed passage 23. This diverter ring 28 diverts flow from main feed passage 22 into primary feed passage 27 and restricts flow from main feed passage 22 into secondary feed passage 23.

The cylindrical drive casing feed opening 30 is formed axially and centrally completely through the inner die member 21. Rearwardly of primary plastic feed passage 27, this drive casing feed opening is merely formed of sufficient size for the free passage of a sheath covered inner liner member 11 (shown in FIGS. 8, 9 and 10) axially therethrough, but forwardly of primary plastic feed passage 27, this drive casing feed opening 30 is preferably formed of a predetermined size for regulating the extruded size of the outer cover first stage 15 of the outer cover member 12 (shown in FIGS. 9 and 10), as will be hereinafter discussed in detail.

Thus, primary plastic feed passage 27 communicates with terminal 22*a* of main feed passage 22 and extends radially inwardly through inner die member 21 and communicates with drive casing feed opening bore 30. Secondary feed passage 23 communicates with terminal 22*a* of main feed passage 22, then extends beyond primary feed passage 27 around diverter ring 28 and finally communicates with the forward end of drive casing feed bore 30 adjacent the outlet ends of the outer and inner die members 20 and 21.

The feed passage 27, as best seen in FIGS. 4 and 5, is formed by preferably four equally circumferentially spaced and radially extending plastic holes or openings 31, which openings communicate outwardly with terminal 22*a* of the main plastic feed passage 22 and communicate inwardly into an annular plastic feed distribution recess 32. Plastic feed distribution recess 32 surrounds and opens into the drive casing feed opening 30 of the inner die member 21, as shown.

It will be noted that, in view of the fact that the main plastic feed passage 22 is annular, surrounding the inner die member 21 within the outer die member 20, this main plastic feed passage will provide an annular flow of plastic material continuously to primary plastic feed passage 27 and secondary plastic feed passage 23, and the size of the main plastic feed passage 22 is properly calculated so as to provide the proper feed for both plastic feed passages 27 and 23. Also, although the entrance into primary plastic feed passage 27 is through the circumferentially spaced feed openings 31, the plastic material being fed therethrough enters the annular distribution recess 32 so as to be applied or extruded by this distribution recess in a continuous annular path, completely around a sheath covered inner liner member 11 moving through the drive casing feed opening 30.

The feed diverter ring 28 projecting as a cylindrical collar radially and annularly outwardly into secondary plastic feed passage 23, spaced slightly forwardly of primary plastic feed passage 27, is also of a specifically calculated size so as to provide a restriction within secondary plastic feed passage 23 for diverting the proper amount of plastic material into primary plastic feed passage 27, while still permitting a predetermined amount of this plastic material to pass on forwardly through secondary plastic feed passage 23. This feed diverter ring 28 is calculated such that, using the particular plastic material for a particular drive casing construction, the projection may be such as to create any degree of pressure desired on the plastic material passing into primary plastic feed passage 27, and in this manner, the proper degree of embedding of the plastic material forming the outer cover first stage 15 (FIGS. 9 and 10) by the braided sheath 13 may be accomplished.

Still further, the fact that secondary plastic feed passage 23 is annular and opens annularly at the outlet ends of the inner and outer die members 21 and 20 provides an annular extrusion of the outer cover second stage 17 (FIG. 10) completely surrounding and covering the outer cover first stage 15. Again, by regulating the amount of plastic material passing through this secondary plastic feed passage 23, both by the size and projection of the feed diverter ring 28 as well as the size of secondary plastic feed passage 23, this outer cover second stage 17 may be properly regulated as to final dimensions.

Finally, by predetermining the proper size of the drive casing feed opening 30 between primary plastic feed passages 27 and the forward termination of secondary plastic feed passage 23, the proper thickness of the outer cover first stage 15 (FIGS. 9 and 10) may be precisely regulated. Thus, inherent in the die construction of the present invention is the proper exact regulation of both

the outer cover first and second stages 15 and 17 so as to provide proper final thickness of the outer cover member 12, the proper embedding thereof with the braided sheath 13, and the desired proper concentricity between the inner opening of the inner liner member 11 and the outer surface 18 of the outer cover member 12.

As shown in FIG. 3, in use of the die construction of the present invention, plastic material 33 in a preferably hot plastic state is fed forwardly through the main plastic feed passage 22, as indicated by the flow arrows 34, and flows partially into primary plastic feed passage 27 and partially into secondary plastic feed passage 23. A sheath covered inner layer member 11 of the type illustrated in FIGS. 8, 9 and 10 is at the same time fed forwardly through the drive casing feed opening 30, as indicated by the arrows 35.

The plastic material passing inwardly through primary plastic feed passage 27 flows through the feed openings 31, filling the distribution recess 32, and is extruded uniformly from this distribution recess annularly around the sheath covered inner layer member 11 so as to form the outer cover first stage 15. As previously stated, by regulation of the various components of the die construction, the pressure of extrusion of this outer cover first stage 15 is regulated to a predetermined amount, and the final size of this outer cover first stage is determined by the precalculated size of the drive casing feed opening 30 between this primary plastic feed passage 27 and the forward end of the inner die member 21.

The remainder of the plastic material from the main plastic feed passage 22 flows forwardly into secondary plastic feed passage 23 around the feed diverter ring 28 and is finally extruded from this secondary plastic feed passage in an annular outer cover second stage 17, over and covering the outer cover first stage 15. Such extrusion takes place at the forward opening of secondary plastic feed passage 23 which is at the outlet ends of the outer die member 20 and inner die member 21, as shown.

It should be understood that all of the various sizes, projections and dimensions of the die construction must be closely determined for any particular drive casing construction and any particularly desired result. Furthermore, these various controlling components may be varied as desired to produce the desired results, without departing from the principles of the present invention.

Referring to FIGS. 1 and 2, the die construction of the present invention described above, may be mounted in a usual die holder 36 on a standard extruder 37 in a production line with a relatively closely following usual water cooling trough, generally indicated at 38, provided with the water supply trough 39, under which is mounted the usual water overflow trough 40. A coil 41 of sheath covered inner layer member 11 may be rotatably mounted in the usual manner on the extruder 37 so as to extend continuously through the extruding die 19 and forwardly through the water cooling trough 38, and in this manner, as soon as the two stage outer cover member 12 is extruded onto the sheath cover inner liner member 11, the final construction is immediately cooled and may then be recoiled for storage or cut to desired length as desired.

Thus, according to the principles of the present invention, a unitary two-stage extruding die is provided for forming outer cover members on flexible drive casings in a highly efficient manner, and with which the proper wall thicknesses and concentricity between the various liner and cover members is automatically maintained, and the same time, a strong integrated final drive casing construction is provided having high kink and crush resistance.

In the foregoing description, certain terms have been used for brevity, clearness and understanding but no unnecessary limitations are to be implied therefrom, because such words are used for descriptive purposes herein and are intended to be broadly construed.

Moreover, the embodiment of the improved extruding die construction illustrated and described herein is by way of example and the scope of the present invention is not limited to the exact details of construction shown.

Having now described the invention, the construction, operation and use of a preferred embodiment thereof, and the advantageous new and useful results obtained thereby, the new and useful construction and reasonable mechanical equivalents thereof obvious to those skilled in the art are set forth in the appended claims.

I claim:

1. In the die construction for the continuous two-stage extrusion of plastic cover material upon and around a braided reinforcing sheath surrounding and partially embedded in an inner flexible plastic tube; the combination of an outer die member having inlet and outlet ends, the outer die member being formed with a central bore extending between the die ends having a cylindrical portion extending from the die outlet end and a conical portion extending from the die inlet end flaring inwardly and intersecting the cylindrical portion at a zone located intermediate the die ends; an inner die member having inlet and outlet ends, the inner die member being formed with a central cylindrical plastic tube feed bore extending between the die ends, the inner die member having a tubular wall extending from the die outlet end and a conical portion having a conical outer surface extending from the die inlet end flaring inwardly and intersecting the tubular wall at a zone located intermediate the die ends; the inner die member being telescoped concentrically within the outer died member, with the die member conical portions located in speed complementary concentric relation forming a conical main feed passage, and with the inner die tubular wall located in spaced complementary concentric relation to the outer die member cylindrical portion forming a secondary feed passage; the intersecting zones of the die members being located adjacent one another and forming a terminal for said main feed passage; there being primary feed passage means formed in the inner die member adjacent said inner die member intersecting zone communicating between the main feed passage terminal and the inner die mem-central bore; and diverter means extending into the secondary feed passage adjacent the primary feed passage means and the main feed passage terminal to divert flow from the main feed passage into the primary feed passage means and to restrict flow from the main feed passage into the secondary feed passage.

2. The construction defined in claim 1 in which the primary feed passage means comprises a series of holes formed extending through the inner die member tubular wall adjacent the intersecting zone of the inner die member, and an annular recess formed in the inner die member central bore communicating with said series of holes.

3. The construction defined in claim 1 in which the diverter means comprises a ring formed on and surrounding the inner die member tubular wall adjacent said primary feed passage means.

References Cited by the Examiner

UNITED STATES PATENTS

2,317,687	4/1943	Larchar	18—14 X
2,767,431	10/1956	DeLaubarede	18—14 X
2,957,201	10/1960	Fields	18—14 X
2,990,577	7/1961	DeLaubarede	18—14
3,157,877	12/1964	Orsini	18—14 X

WILLIAM J. STEPHENSON, *Primary Examiner.*