Jan. 5, 1954 H. G. McENEANEY 2,664,734

LOCKING DEVICE FOR ELECTRICAL CONNECTIONS

Filed June 2, 1949

FIG. 1.

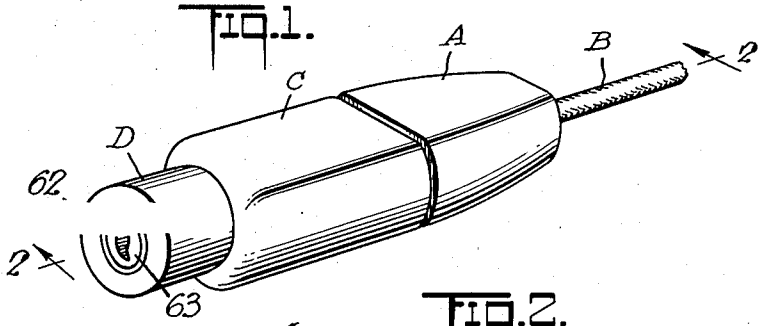


FIG. 2.

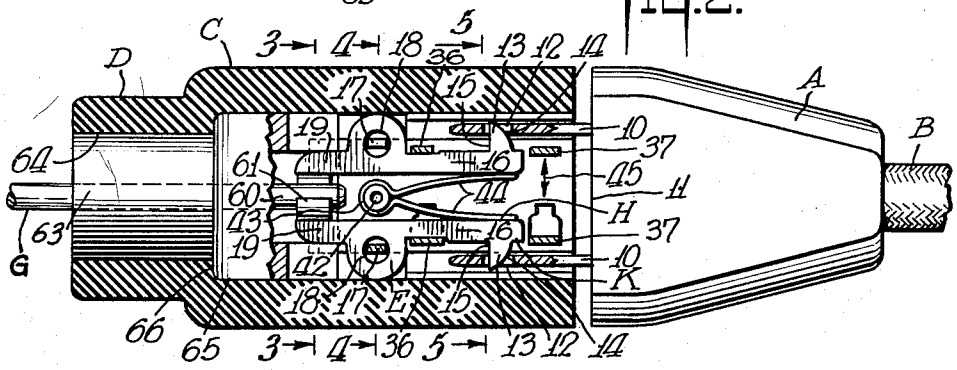


FIG. 3.

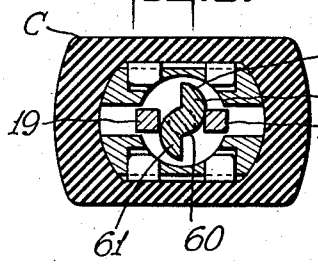


FIG. 4.

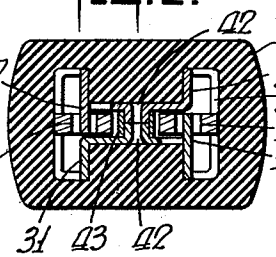


FIG. 5.

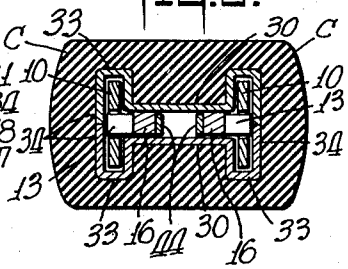


FIG. 6.

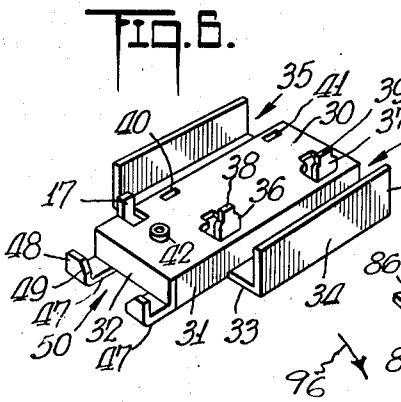


FIG. 7.

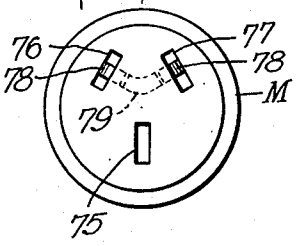


FIG. 8.

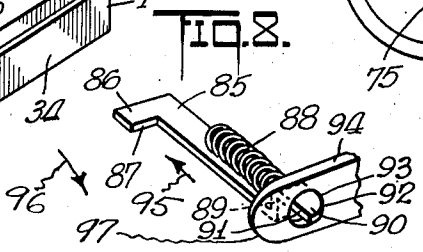


INVENTOR
Hugh G. McEneaney
BY
ATTORNEY

Patented Jan. 5, 1954 2,664,734

# UNITED STATES PATENT OFFICE

2,664,734

## LOCKING DEVICE FOR ELECTRICAL CONNECTIONS

Hugh G. McEneaney, New York, N. Y.

Application June 2, 1949, Serial No. 96,677

5 Claims. (Cl. 70—57)

1

The present invention relates to a locking mechanism and it particularly relates to a locking mechanism for electrical fixtures.

It is among the objects of the present invention to provide a novel locking mechanism for electrical fixtures, and a particular object is to provide a readily attachable and detachable locking device for multi-prong or blade electrical plugs to prevent unauthorized use of the electrical fixture.

Another object is to provide a locking device with the usual plug-in electrical connection, which may be utilized in combination with radio sets, television sets, electric irons, electric toasters and various other tools and electrical implements or devices in and around the household or in and around a home shop.

Another object is to provide a simple, inexpensive, durable, readily operated electric protective mechanism which may be readily applied to electrical fixtures or appliances or devices, particularly in households where there are children and which will prevent such dangerous implements as electric heaters, electric saws, electric beaters, electric drills, electrical grinders and other electrically driven implements from being accidentally operated or manipulated by children in and around the household.

Another object is to provide protective devices for television sets, electric phonographs, radio sets and other complicated and expensive electrical equipment readily subject to derangement which will prevent any authorized use thereof and which will also give assurance that such devices will not be operated on the wrong potential or the wrong type of voltage.

Still further objects and advantages will appear in the more detailed description set forth below, it being understood, however, that this more detailed description is given by way of illustration and explanation only and not by way of limitation, since various changes therein may be made by those skilled in the art without departing from the scope and spirit of the present invention.

According to the preferred embodiment of the present invention, an electrical plug connection of the two or three prong type is provided with an auxiliary locking receptacle which will engage and lock said plugs. This receptacle may only be removed by the use of a key in the hands of an authorized user.

In the preferred form of device, the prongs or blades are arranged to be inserted into a receiver. Desirably, the locking receiver consists of an elongated body having recesses into which

2

the prongs or blades are inserted. These recesses are provided with latch means to latch the prongs or blades as they pass by and prevent withdrawal thereof.

At the end of the body or at the side of the body is desirably provided an extension having a key-receiving recess which will unlatch said prongs and permit ready removal of the plug for usage.

With the foregoing and other objects in view, the invention consists of the novel construction, combination and arrangement of parts as hereinafter more specifically described, and illustrated in the accompanying drawings, wherein is shown an embodiment of the invention, but it is to be understood that changes, variations and modifications can be resorted to which fall within the scope of the claims hereunto appended.

In the drawings wherein like reference characters denote corresponding parts throughout the several views:

Fig. 1 is a top perspective view showing the eletrical plug with the lock in position thereon.

Fig. 2 is a transverse vertical sectional view upon the line 2—2 of Fig. 1, showing the receiver locked in position upon the plug.

Figs. 3, 4 and 5 are transverse, vertical and sectional views upon the lines 3—3, 4—4, and 5—5 of Fig. 2, showing the locking combination.

Fig. 6 is a top perspective view of a part of the internal construction of the locking device.

Fig. 7 is a transverse vertical sectional view showing the device diagrammatically applied to a three-prong locking receptacle.

Fig. 8 is a diagrammatic fragmentary perspective view illustrating an alternative embodiment.

Referring to Figs. 1 to 6, there is shown the standard electrical multi-knife or prong plug A having the electrical cord B. This plug A is designed to receive a protective casing C and a key projection D. Interiorly of the casing C is a latching arrangement E.

The plug as shown best in Fig. 2 has two prongs 10 from the base 11 of the plug A. The prongs are provided with recesses 12. These recesses are designed to receive the teeth or projections 13 having the camming curved inlet faces 14 and the perpendicular locking faces 15. These teeth 13 are carried on the arms 16, which are pivotally mounted on the bars 17 by the eyes 18. Beyond the eyes 18 the extensions 19 are provided to engage the end of the key.

The arms 16 are encased in two receiver elements F (see Fig. 6) which have a base-plate

30 with the out-turned side flanges 31, the out-turned rear flange 32, the outstanding flanges 33 and the outside in-turned flanges 34.

Between the sides 31 and the upright flanges 34 are provided the channels 35 which receive the prongs 10 of the plug A.

Stamped out and extending upwardly from the base 30 are the stepped spaces 36 and 37 with the narrow extensions 38 and 39. The extensions 38 and 39 fit in the recesses 40 and 41, respectively, of the opposite element F' of the pair of casing elements F.

The base 30 also has an upstanding portion 42 which forms a pivot for the U-end of the double-leaf spring 44. The spring 44 tends to press the legs 16 apart, as indicated by the arrow 45 in Fig. 2.

The base-plate 30 is also provided with an upstanding tang 17 stamped out of the body thereof, which is received in the eyes 18 of legs 16 and serves as pivot elements for the latch legs 16.

Beyond the flange 32 are the extensions 47 with the upstanding teeth 48 bevelled at 49 between which is formed the recess 50 into which the key projects.

The key G is shown in position in Figs. 2 and 3 and it is provided with a central shaft 60 with the outstanding teeth 61. The key G is readily inserted in the recess 62 (see Fig. 1) in the end closure 63 in the opening 64 (see Fig. 2) in the key projection D.

In assembly, the two shells F forming the body of the locking structure E are assembled with the latching legs 16 and the spring 44 and they are then inserted in the interior opening 65 against the shoulder 66 (see Fig. 2) in the body C. The plug 63 is then inserted in the opening 64 in the projection D. Any suitable key may then be utilized to open the legs, as indicated best in Figs. 2 and 3.

The wings 61 of the key will act as cams against the extensions 19 of the latch legs K to withdraw the teeth 13 from the opening 12 in the prongs 10 and permit withdrawal of the plug A. Upon insertion of the plug A, the prongs 10 will be guided into the channels 35 and will slide over the camming faces 14, pressing them inwardly against the spring legs 44 until the teeth 13 snap back into the opening 12. Then the plug A will be locked in position.

The arrangement shown in Figs. 1 to 5 may be readily utilized for any number of or shape of prongs. If desired, one channel may be provided for locking a single-prong connection and only one prong may be locked in a two, three, four or other multi-prong construction.

The structure of the locking device C may also be readily changed to accommodate various shapes and forms of blades 10, whether they be parallel or in the same plane or at angles to one another. The blades 10 may also be of differential cross-sectional construction.

In Fig. 7, by way of illustration, is shown a receptacle M for a three-prong plug, having receptacles or channels 75, 76 and 77. The channels 76 and 77 are at angles to each other instead of being parallel, like the channels 35 of Figs. 1 to 6. However, the teeth 78 are of the same form as the teeth 13 of Fig. 2 and the interior construction may be the same as that indicated in Figs. 1 to 6, except that the cage F will be arranged so as to hold the latching legs K at a slight angle to one another, as indicated at 79 in Fig. 7.

In the alternative construction of Fig. 8, one of the pair of transversely reciprocating latching members 85 is shown. Member 85 has an outstanding end lug 86. The face or edge 87 is acted upon by a key of the construction as shown at G in Fig. 3 to move the member 85 to the left to unlatch the electrical plug A as shown by arrow 95.



The coil spring 88 acting on shoulder or offset 89 presses the element 85 in direction 96 to latch the electric plug A. This will press the latching tooth 90 with the locking edge 91 and cam edge 92 into opening 93 into prong 94 of the plug A.

When inserted, the round end 97 of prong 94 will press cam 92 of element 85 to the left in direction 95 until the spring 88 snaps the nose 90 into opening 93. The plug A will then be locked in the casing C by spring 88 pressing nose 90 into opening 93. When the key G is inserted into opening 62 of casing C and turned to press its camming face 61 against edge 87 of angle extension 86, the nose 90 will be withdrawn from opening 93 and the prong 94 and plug A may be withdrawn.

While there has been herein described a preferred form of the invention, it should be understood that the same may be altered in details and in relative arrangement of parts within the scope of the appended claims.

Having now particularly described and ascertained the nature of the invention, and in what manner the same is to be performed, what is claimed is:

1. An electric prong plug lock, said plug having parallel flat prongs projecting from the end thereof, comprising an elongated flat chambered body of rectangular cross section having widely spaced opposite narrow edge walls and parallel relatively wide more closely spaced side walls, elongated tubular structures of rectangular cross section within the chambered body adjacent the edge walls to receive the prongs of an electric prong plug, pivotally mounted locking levers between said tubular structures and having pivot mounts at the adjacent inside edges of said tubular structures and a V-shaped leaf spring between said locking levers to bias said locking levers toward said tubular structures, said chambered body having one opening at the end of each tubular structure to receive said prongs and said levers engaging said prongs when inserted into said tubular structures.

2. In an electric plug connection of the type having a plurality of outwardly parallel projecting blades having recesses therein; the combination therewith of a locking receptacle having an elongated casing, a pair of pivotally mounted levers therein with projections at the ends thereof to engage said prongs by said recesses, said casing having slots at one end to receive said blades and said casing having an opening at the other end thereof to enable access to said levers and enable disengagement, said casing having transverse pivot mounts for said levers, said levers extending beyond said pivot mounts away from the ends with the projections thereon, and said extensions of said levers serving to enable disengagement.

3. A locking device for a double parallel blade electric plug, said blades being recessed, comprising a body having a longitudinal chamber extending therethrough, a casing fitting within said chamber, said casing having two opposite contacting receivers with side channels and spacers extending out of the middle section thereof and

pivot mounts extending from said middle sections, two parallel levers having eyes mounted on said pivot mounts and having end projections to engage said recesses of said blades, the ends of said levers away from said projections extending beyond said pivot mounts and adapted to be separated by a camming device to disengage said projections from said recesses.

4. The device of claim 3, a U-shaped spring positioned in said casing to press said parallel levers apart into engaging position and said casing having stop members to limit the movement of said levers under the action of said spring.

5. A tubular lock for the parallel prongs of an electric plug having recesses therein, comprising an outer molded tubular body, a key-receiving casing in the rear end of said body and a prong-receiving casing in the front end thereof, said prong-receiving casing having parallel slideways to receive the prongs and parallel levers between said slideways said levers being pivoted intermediate their ends and having outwardly projecting teeth at the forward ends



thereof, said teeth projecting into said slideways to engage said recesses in said prongs, the other ends of the levers having extensions toward said key-receiving casing between which the key is received.

HUGH G. McENEANEY.


**References Cited** in the file of this patent

UNITED STATES PATENTS

| Number | Name | Date |
|---|---|---|
| 877,676 | Snook | Jan. 28, 1908 |
| 957,033 | De Bruycker | May 3, 1910 |
| 1,090,736 | Martin | Mar. 17, 1914 |
| 1,601,359 | Harrington | Sept. 28, 1926 |
| 1,659,664 | Page | Feb. 21, 1928 |
| 1,935,154 | Klump | Nov. 14, 1933 |

FOREIGN PATENTS

| Number | Country | Date |
|---|---|---|
| 509,276 | Germany | Oct. 10, 1930 |
| 571,528 | Germany | Mar. 2, 1933 |
| 780,162 | France | Apr. 19, 1935 |