(12) INTERNATIONAL APPLICATION PUBLISHED UNDER THE PATENT COOPERATION TREATY (PCT)

(19) World Intellectual Property Organization
International Bureau

(43) International Publication Date
9 February 2006 (09.02.2006)

PCT

(10) International Publication Number
WO 2006/013526 A3

(51) International Patent Classification:
G11B 7/00 (2006.01) *G11B 7/125* (2006.01)

(21) International Application Number:
PCT/IB2005/052460

(22) International Filing Date: 21 July 2005 (21.07.2005)

(25) Filing Language: English

(26) Publication Language: English

(30) Priority Data:
04300480.3 27 July 2004 (27.07.2004) EP

(71) Applicant *(for all designated States except US)*: **KONINKLIJKE PHILIPS ELECTRONICS N.V.** [NL/NL]; Groenewoudseweg 1, NL-5621 BA Eindhoven (NL).

(72) Inventors; and

(75) Inventors/Applicants *(for US only)*: **HENDRIKS, Bernardus** [NL/FR]; Société Civile SPID, 156, boulevard Haussmann, F-75008 Paris (FR). **TUKKER, Teunis, Willem** [NL/FR]; Société Civile SPID, 156, boulevard Haussmann, F-75008 PARIS (FR).

(74) Agent: **CHAFFRAIX, Jean**; Société Civile SPID, 156, boulevard Haussmann, F-75008 Paris (FR).

(81) Designated States *(unless otherwise indicated, for every kind of national protection available)*: AE, AG, AL, AM, AT, AU, AZ, BA, BB, BG, BR, BW, BY, BZ, CA, CH, CN, CO, CR, CU, CZ, DE, DK, DM, DZ, EC, EE, EG, ES, FI, GB, GD, GE, GH, GM, HR, HU, ID, IL, IN, IS, JP, KE, KG, KM, KP, KR, KZ, LC, LK, LR, LS, LT, LU, LV, MA, MD, MG, MK, MN, MW, MX, MZ, NA, NG, NI, NO, NZ, OM, PG, PH, PL, PT, RO, RU, SC, SD, SE, SG, SK, SL, SM, SY, TJ, TM, TN, TR, TT, TZ, UA, UG, US, UZ, VC, VN, YU, ZA, ZM, ZW.

(84) Designated States *(unless otherwise indicated, for every kind of regional protection available)*: ARIPO (BW, GH, GM, KE, LS, MW, MZ, NA, SD, SL, SZ, TZ, UG, ZM, ZW), Eurasian (AM, AZ, BY, KG, KZ, MD, RU, TJ, TM), European (AT, BE, BG, CH, CY, CZ, DE, DK, EE, ES, FI, FR, GB, GR, HU, IE, IS, IT, LT, LU, LV, MC, NL, PL, PT, RO, SE, SI, SK, TR), OAPI (BF, BJ, CF, CG, CI, CM, GA, GN, GQ, GW, ML, MR, NE, SN, TD, TG).

Declaration under Rule 4.17:

— *as to applicant's entitlement to apply for and be granted a patent (Rule 4.17(ii))*

Published:

— *with international search report*

— *before the expiration of the time limit for amending the claims and to be republished in the event of receipt of amendments*

(88) Date of publication of the international search report:
22 June 2006

[Continued on next page]

(54) Title: DIFFRACTIVE PART

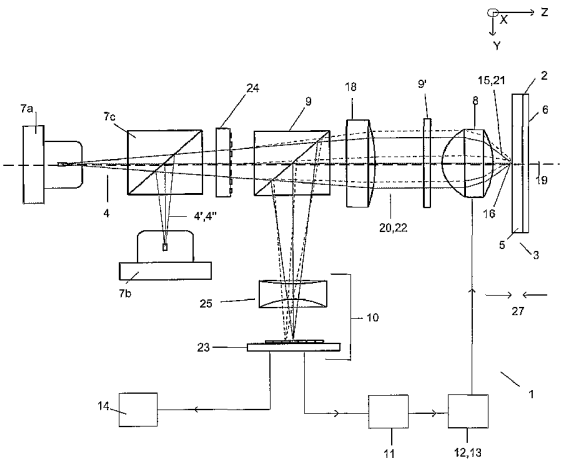

(57) Abstract: A diffractive part for an optical scanning device is described. The device is for scanning a first information layer by means of a first radiation beam having a first wavelength and a first polarisation, a second information layer by means of a second radiation beam having a second wavelength and a second polarisation, and a third information layer by means of a third radiation beam having a third wavelength and a third polarisation. The first, second and third wavelengths differ from each other. The device includes a radiation source for supplying the first, second and third radiation beams, an objective lens system for converging the radiation beams on the respective information layer, and a diffractive part arranged in the optical path of the radiation beams. The diffractive part includes a first diffractive grating structure having a series of steps of predetermined height to introduce a phase change that is an integral multiple of 27E for both the second and third wavelengths but not the first wavelength, and a second diffractive grating structure having a series of steps of predetermined height to introduce a phase change that is an integral multiple of 2π for the first and third wavelengths but not the second wavelength.

WO 2006/013526 A3

For two-letter codes and other abbreviations, refer to the "Guidance Notes on Codes and Abbreviations" appearing at the beginning of each regular issue of the PCT Gazette.

INTERNATIONAL SEARCH REPORT

International application No
/IB2005/052460

A. CLASSIFICATION OF SUBJECT MATTER
INV. G11B7/00 G11B7/125

According to International Patent Classification (IPC) or to both national classification and IPC

B. FIELDS SEARCHED

Minimum documentation searched (classification system followed by classification symbols)
G11B H04N G03F

Documentation searched other than minimum documentation to the extent that such documents are included in the fields searched

Electronic data base consulted during the international search (name of data base and, where practical, search terms used)

EPO-Internal, PAJ

C. DOCUMENTS CONSIDERED TO BE RELEVANT

Category*	Citation of document, with indication, where appropriate, of the relevant passages	Relevant to claim No.
P,X	US 2005/083562 A1 (HENDRIKS BERNARDUS HENDRIKUS W) 21 April 2005 (2005-04-21) the whole document	1,5-8, 10,12,13
A	PATENT ABSTRACTS OF JAPAN vol. 2000, no. 25, 12 April 2001 (2001-04-12) & JP 2001 209966 A (PIONEER ELECTRONIC CORP), 3 August 2001 (2001-08-03) the whole document & EP 0 789 355 A (PIONEER ELECTRONIC CORPORATION) 13 August 1997 (1997-08-13)	1-13
A	US 5 966 364 A (KAMATANI ET AL) 12 October 1999 (1999-10-12) the whole document	1-13

-/--

[X] Further documents are listed in the continuation of Box C.

[X] See patent family annex.

* Special categories of cited documents :

"A" document defining the general state of the art which is not considered to be of particular relevance

"E" earlier document but published on or after the international filing date

"L" document which may throw doubts on priority claim(s) or which is cited to establish the publication date of another citation or other special reason (as specified)

"O" document referring to an oral disclosure, use, exhibition or other means

"P" document published prior to the international filing date but later than the priority date claimed

"T" later document published after the international filing date or priority date and not in conflict with the application but cited to understand the principle or theory underlying the invention

"X" document of particular relevance; the claimed invention cannot be considered novel or cannot be considered to involve an inventive step when the document is taken alone

"Y" document of particular relevance; the claimed invention cannot be considered to involve an inventive step when the document is combined with one or more other such documents, such combination being obvious to a person skilled in the art.

"&" document member of the same patent family

Date of the actual completion of the international search	Date of mailing of the international search report
8 May 2006	15/05/2006

Name and mailing address of the ISA/	Authorized officer
European Patent Office, P.B. 5818 Patentlaan 2 NL - 2280 HV Rijswijk Tel. (+31-70) 340-2040, Tx. 31 651 epo nl, Fax: (+31-70) 340-3016	Kyranos, E

Form PCT/ISA/210 (second sheet) (April 2005)

C(Continuation). DOCUMENTS CONSIDERED TO BE RELEVANT

Category*	Citation of document, with indication, where appropriate, of the relevant passages	Relevant to claim No.
A	US 2002/051247 A1 (JUTTE PETRUS THEODORUS ET AL) 2 May 2002 (2002-05-02) the whole document	1-13
A	US 2003/064295 A1 (YASUYUKI UNNO ET AL) 3 April 2003 (2003-04-03) the whole document	1-13
A	US 2003/039033 A1 (TAKEUCHI SHUICHI ET AL) 27 February 2003 (2003-02-27) the whole document	1-13

INTERNATIONAL SEARCH REPORT

Information on patent family members

International application No
.../IB2005/052460

Patent document cited in search report	Publication date	Patent family member(s)	Publication date
US 2005083562 A1	21-04-2005	AT 322071 T	15-04-2006
		AU 2002351152 A1	30-07-2003
		CN 1623195 A	01-06-2005
		WO 03060891 A2	24-07-2003
		JP 2005515579 T	26-05-2005
JP 2001209966 A	03-08-2001	NONE	
EP 0789355 A	13-08-1997	DE 69728313 D1	06-05-2004
		DE 69728313 T2	03-03-2005
		JP 3474346 B2	08-12-2003
		JP 9212894 A	15-08-1997
		US 5886970 A	23-03-1999
US 5966364 A	12-10-1999	NONE	
US 2002051247 A1	02-05-2002	AT 289444 T	15-03-2005
		CN 1397068 A	12-02-2003
		DE 60108938 D1	24-03-2005
		DE 60108938 T2	29-12-2005
		WO 0225646 A1	28-03-2002
		JP 2004510281 T	02-04-2004
		TW 591642 B	11-06-2004
US 2003064295 A1	03-04-2003	JP 3359309 B2	24-12-2002
		JP 2000199813 A	18-07-2000
US 2003039033 A1	27-02-2003	CN 1391120 A	15-01-2003
		DE 10226375 A1	19-12-2002
		TW 535009 B	01-06-2003