April 14, 1970 A. M. JOHNSON 3,505,926

LINE THROWING DEVICE

Filed July 9, 1968 4 Sheets-Sheet 1

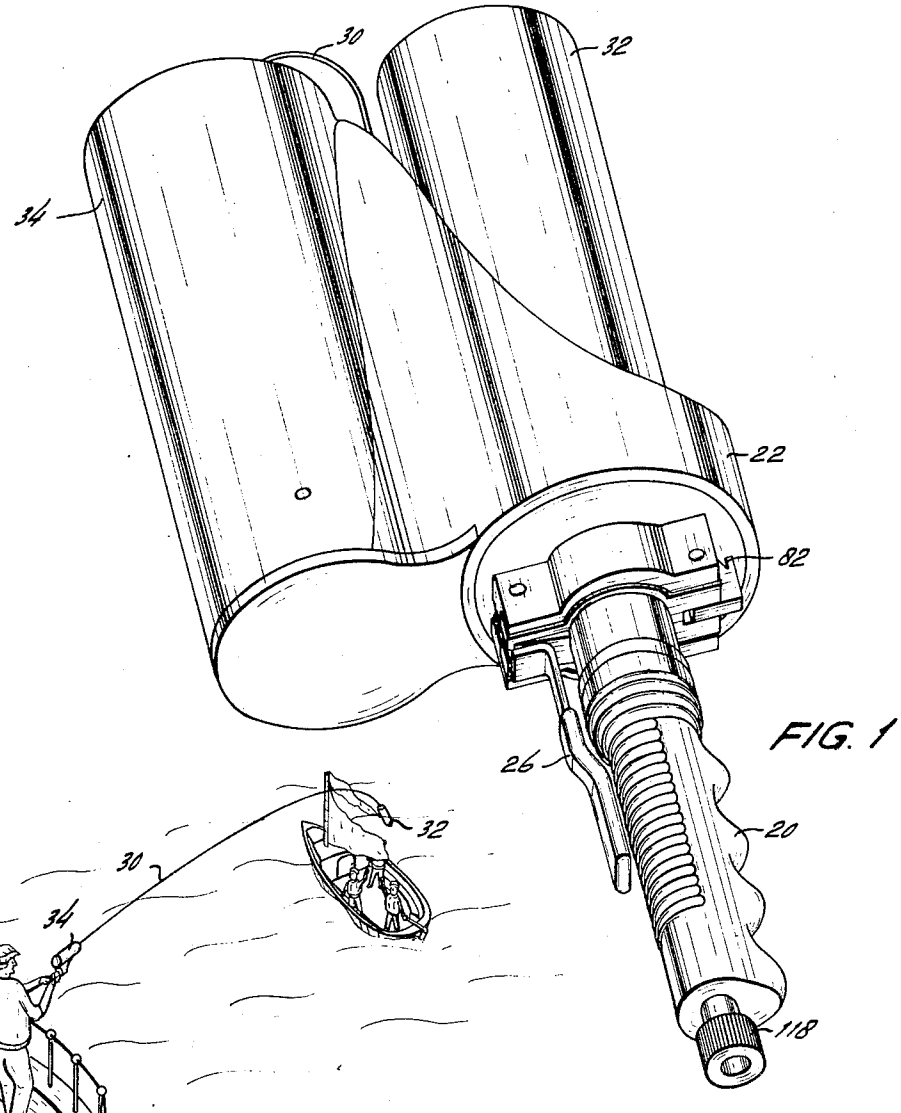

FIG. 1

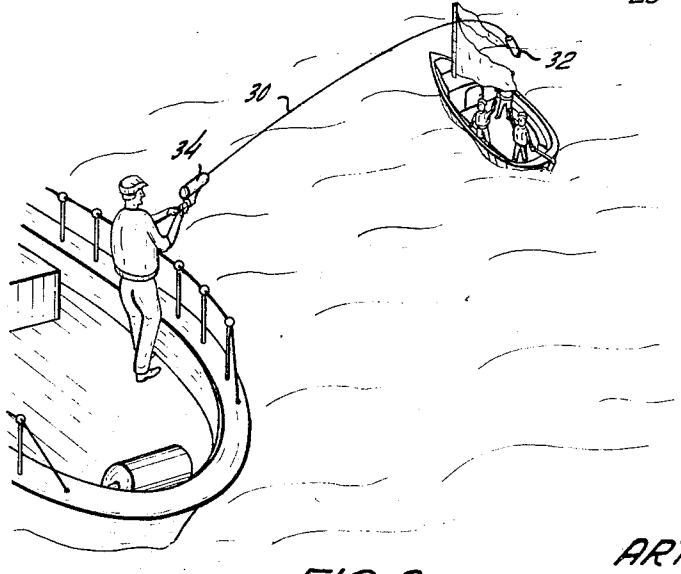

FIG. 2

INVENTOR

ARTHUR M. JOHNSON

BY Semmes and Semmes

ATTORNEYS

April 14, 1970 A. M. JOHNSON 3,505,926

LINE THROWING DEVICE

Filed July 9, 1968 4 Sheets-Sheet 2

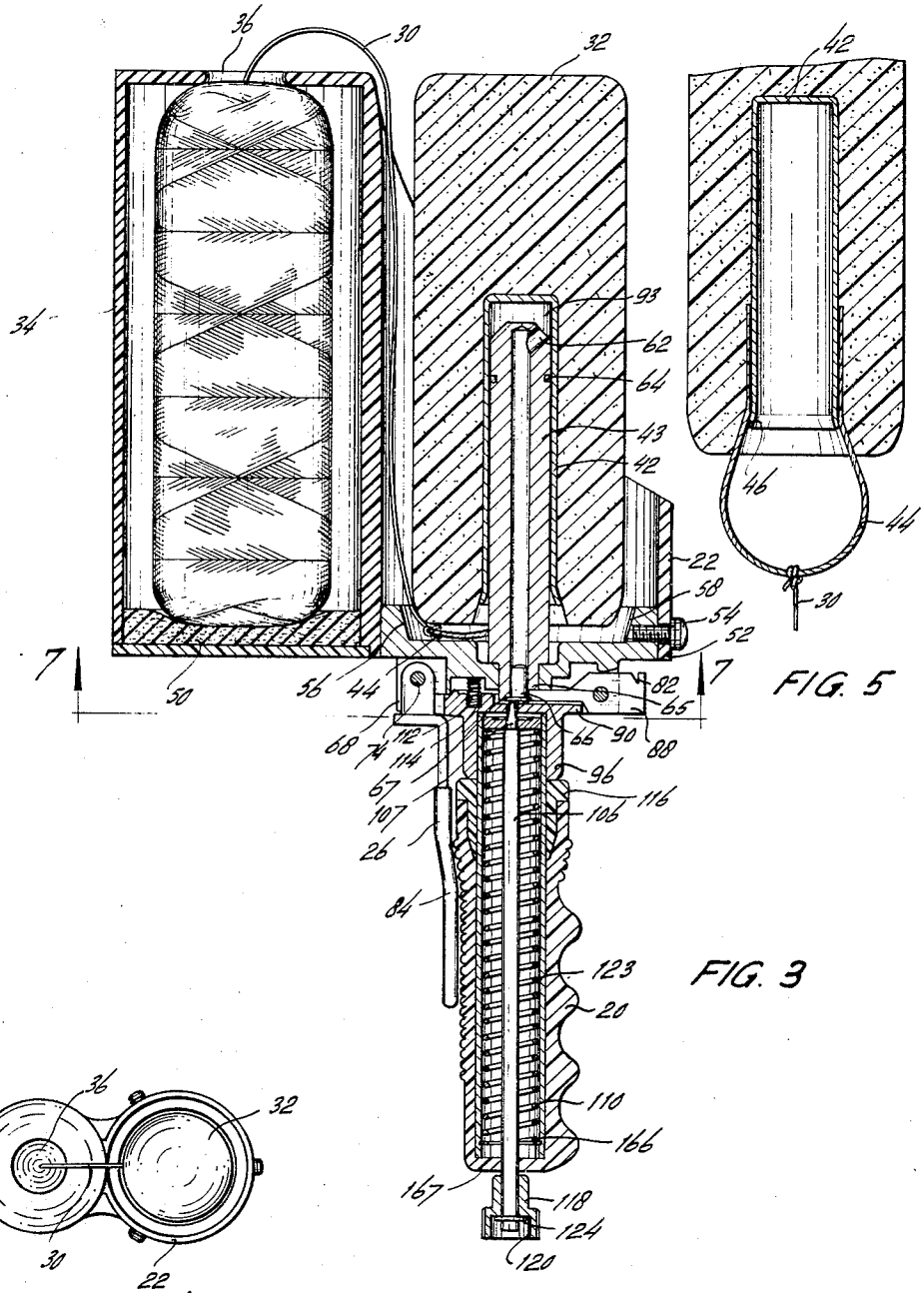

FIG. 5

FIG. 3

FIG. 4

INVENTOR

ARTHUR M. JOHNSON

BY Semmes and Semmes

ATTORNEYS

April 14, 1970 A. M. JOHNSON 3,505,926

LINE THROWING DEVICE

Filed July 9, 1968 4 Sheets-Sheet 3

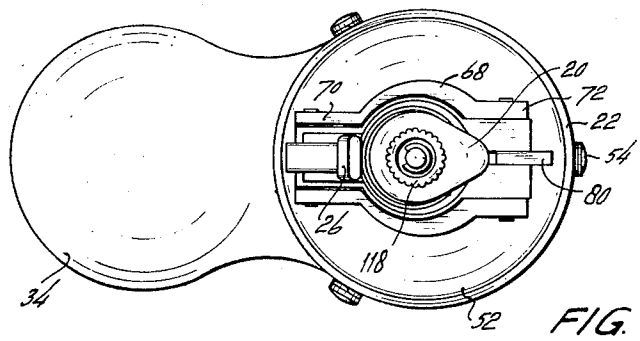

FIG. 6

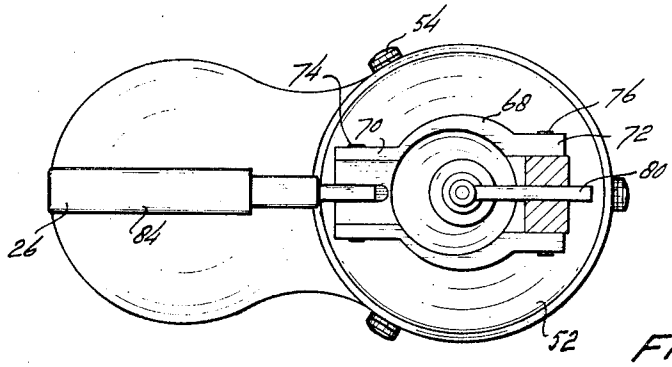

FIG. 7

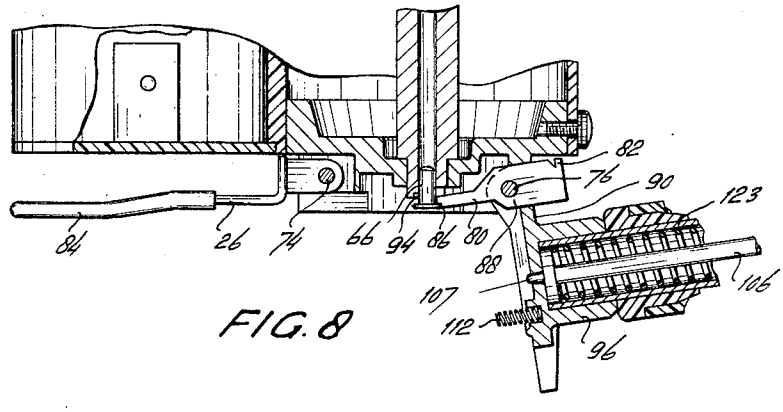

FIG. 8

INVENTOR

ARTHUR M. JOHNSON

BY Semmes and Semmes

ATTORNEYS

April 14, 1970 A. M. JOHNSON 3,505,926

LINE THROWING DEVICE

Filed July 9, 1968 4 Sheets-Sheet 4

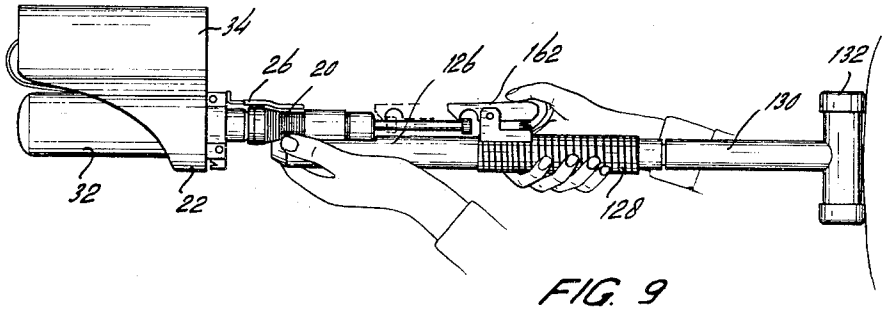

FIG. 9

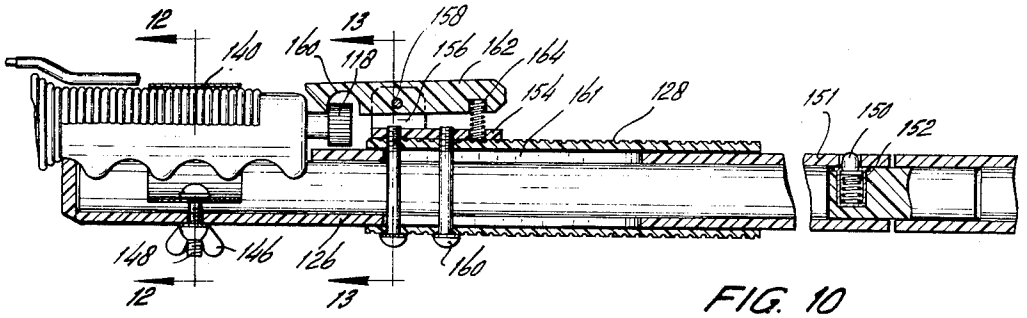

FIG. 10

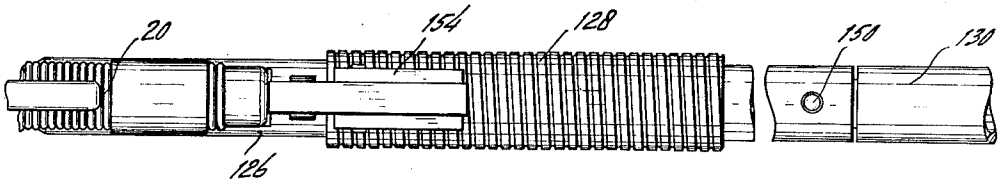

FIG. 11

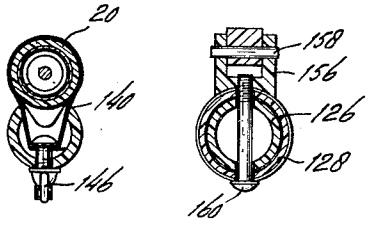

FIG. 12 FIG. 13

INVENTOR

ARTHUR M. JOHNSON

BY Semmes and Semmes

ATTORNEYS

United States Patent Office 3,505,926
Patented Apr. 14, 1970

3,505,926

LINE THROWING DEVICE

Arthur M. Johnson, Silver Spring, Md., assignor to Scientific Products Corp., Alexandria, Va., a corporation of Virginia

Filed July 9, 1968, Ser. No. 743,446
Int. Cl. F41b 3/00; F41f 1/00
U.S. Cl. 89—1 5 Claims

ABSTRACT OF THE DISCLOSURE

Projectile throwing devices, particularly a blank cartridge fired device for throwing a projectile and attached line to a distant point.

CROSS-REFERENCE TO RELATED APPLICATION

An improvement and modification of the inventor's earlier obtained Patent No. 3,004,360, entitled Target Projecting Device Utilizing A Can and a Blank Cartridge.

BACKGROUND OF THE INVENTION

Field of the invention

A blank cartridge-fired device for throwing a line and buoyant projectile in water, mountain, apartment house fire and like rescue situations, as well as in non-rescue situations such as throwing lines over streams, trees, gorges, rivers, roofs, from ship-to-ship, up chimneys and the like. The device may also be used to cast fish lines and lures and bait from a standard spinning reel and fishing rod.

Description of the prior art

Prior art projectile and line throwing devices of the mechanical type have included cumbersome compression spring assemblies and have been incapable of firing the projectile with attached line more than several hundred feet. The cartridge actuated type have involved a firing chamber, supporting a shot gun shell and have been dangerous to use, even though their range has been severely limited to hundreds of feet.

SUMMARY OF THE INVENTION

According to the present invention, the line throwing device consists of a housing having a seat for supporting a buoyant, cored projectile and a seat for supporting a wound line. A gas dispersing duct is supported in the seat so that the muzzle end is open to the interior of the projectile and a breech end is supported adjacent a firing pin assembly which is pivoted beneath the breech. A blank cartridge such as .22 calibre is positioned in the breech, the firing pin assembly is pivoted shut and the firing pin is actuated by axial pulling against a compression spring, then releasing. As the pin is released, the cartridge is fired and the compressed gas is dispersed through duct muzzle and interiorly of the projectile. As a result, the projectile is thrown up to 100 yards or more, carrying the line with it. A critical feature of the invention is sealing exteriorly of the muzzle within the projectile core, so as to gain maximum thrust of the blank cartridge dispersed gas. Modifications of invention include the provision of an arm extension for firing of the device from the shoulder.

BRIEF DESCRIPTION OF THE DRAWINGS

FIG. 1 is a perspective view of the device, supporting both projectile **32** and line **30** with pivoted handle **20** having firing pin knob **118** extending axially;

FIG. 2 is a fragmentary perspective showing use of the device in throwing a line from a rescuing vessel to a distressed vessel;

FIG. 3 is a vertical section of the device;

FIG. 4 is a top plan;

FIG. 5 is a fragmentary section of the projectile, showin a wire clasp **44** for connection to the line;

FIG. 6 is a bottom plan;

FIG. 7 is a horizontal section taken along section line **7—7** of FIG. 3;

FIG. 8 is an enlarged vertical section on the order of FIG. 3, showing the handle and firing pin pivoted away from the breech, loaded with .22 calibre blank cartridge **66**;

FIG. 9 is a side elevation of the modified rifle arm assembly showing shoulder firing extension piece **126** and **130**;

FIG. 10 is a fragmentary and enlarged vertical section of the fore end of the device illustrated in FIG. 9;

FIG. 11 is a fragmentary top plan;

FIG. 12 is a vertical section taken along section line **12—12** of FIG. 11 and showing securement of the extension to pivoted handle **26**; and

FIG. 13 is a vertical section taken along section line **13—13** of FIG. 10 and showing the trigger mounting.

DESCRIPTION OF THE PREFERRED EMBODIMENTS

In FIG. 1 the line throwing device is illustrated as comprising power handle **20** pivoted to housing **22** which supports line stowage bin **34** and resilient projectile **32**. An end cap **28** with foam cushion **50** may be provided for access to stowage bin **34**. Firing pin **106** is supported axially of handle **20** and extends out the handle butt **167** by means of knob **118**.

In FIG. 3 housing **22** is shown as secured to circular base **52** by means of machine screws **54**. Nylon or like interiorly wound line **30** resting upon resilient or foam-like base **50** extends through hole **36** and is tied to wire clasp **44**.

The projectile or missile **32** includes an interior core o- female element **33** defined by inner sleeve **42** which is outwardly flanged as at **46** to enhance positioning of the missile on barrel **43**. Missile **32** may be manufactured from Koroseal (trademark B. F. Goodrich) plastic with a luminescent exterior to enhance nightime use of the device.

Base **52** includes inwardly inclined shoulders **56** defining an annular projectile receiving recess **58**. Barrel **43** includes gas dispersing duct **60** having a radially extending muzzle **62** at one end and a breech **65** at its other end, including a recess **67** for supporting the cartridge **66** rim in firing position opposite firing pin tip **106**. O-ring **64** is mounted exteriorly of barrel **43** intermediate muzzle **62** and breech **65**, so as to seal gas dispersed from the cartridge **66** within expansion chamber **93** interiorly of projectile **32**.

As illustrated in FIGS. 6 and 7 base **52** may be cast so as to provide a downwardly extending flange **68**, defining opposed pairs of mounting ears **70** and **72**, having pivoting pins **74** and **76** set therein. Locking lever **26**, which may be provided with vinyl or like covering **84**, is pivoted about pin **74** mounted in ears **70** and permits opening of the breech and pivoting of handle **20** to the position shown in FIG. 8. Ears **72** pivotably support cartridge ejection assembly **80** and handle collar **96** by means of pin **76**. As handle **20** is pivoted to the position shown at FIG. 8 collar limit edge **90** engages cam assembly portion **88** pivoting ejection assembly **80**. Consequently, cartridge ejection seat **86** engages the cartridge **66** rim, removing the cartridge rim axially away from the breech seat annulus **94** so that the cartridge falls from the duct.

This enables reloading. The device cannot be fired in the position shown in FIG. 8 and can only be fired when the firing pin assembly **106** is positioned in axial alignment with cartridge **66** in the locked position shown in FIG. 3. Then both hands are required to fire the device. A compression spring **110** may be positioned in seat **114** within collar **96** so as to enhance the safety factor, pushing the firing pin tip **107** away from the breech, except as the device is deliberately locked by handle **26**.

Handle **20** including hand grips or like serrations may be mounted about sleeve **123** which is secured inwardly of collar **96** by means of bushing **116**. A compression spring **110** may be supported around firing pin **106** within sleeve **123** and by means of bearing washer **166**. The firing pin assembly includes a handle butt end triggering knob **118** having axial recess **120** for supporting lock washer **124**.

As illustrate in FIGS. 1, 3 and 8 the cartridge ejector assembly **80** may include at its exterior end a notch **82** for cutting line **30** upon completion of the shot.

The device cannot accidentally fire the loaded blank cartridge. The use of two hands are required to hold the device and simultaneously pull triggering knob **118**. The device will not fire from dropping. Also, an additional safety feature inheres in protected dispensing of the cartridge wad into projectile chamber **93**.

In the modification illustrated in FIGS. 9–13 the arm extension **126** includes a reciprocable hand piece **128** which supports trigger mount **154**, having upstanding ears **156** pivotably mounting trigger **162** by means of pin **158**. Trigger **162** has at its forward end aperture **160** enabling grasping of knob **118**, as illustrated in the cocking position shown in FIG. 13.

As illustrated in FIG. 9, the hand piece **128** is then pulled toward the shoulder extension **130** piece and T-bar **132**, which abuts the shoulder. This action cocks firing pin **106**. Then upon depression of the trigger **162** against compression spring **164**, knob **118** is released, thus firing the device. In this modified arrangement handle **20** is supported in arm extension **126** by means of resilient clamp **140**, stove bolt **148** and wing nut **146**. The trigger assembly **154** is secured to the hand piece by means of stove bolts **160** extending through aperture **161** in the rifle arm extension **126**. Detent **150** actuated by compression spring **152** may be provided in that portion of shoulder piece **130** which is coaxially supported inwardly of rifle arm extension **126**, locking in aperture **151** thereof.

The basic device illustrated in FIGS. 1–8 may be operated as follows:

INSTRUCTIONS FOR LOADING AND FIRING

(1) Place spool of line in the line housing. Thread the line through the opening in the front of the cannister.

(2) Tie a cinch knot, as illustrated, leaving a loop of approximately 4 inches diameter. Put the loop through the wire clasp on the rear of the missile, then over the tip, and draw the loop up tight on the wire clasp.

(3) Place missile over the barrel, making sure it is firmly seated and the line is free.

(4) Open the breech. Insert the proper load. Close the breech making certain the latch is firmly locked in place.

(5) Hold the handle and latch firmly in one hand. Point at or over the target area. With other hand, pull back and release the spring loaded firing pin.

(6) After each shot, cut the line on the built-in line cutter, and reload for the next shot.

Manifestly, the housing, handle, missile, and firing devices may be altered without departing from the spirit and scope of invention, as defined in the claims.

What is claimed is:

1. A line throwing device comprising:

(A) a base including a missile seat and a line stowage chamber;

(B) a handle with firing pin assembly pivoted against said base and including:

(i) a spring-urged axial firing pin extensible through said handle so as to fire said cartridge, and

(ii) a manually clasped firing pin knob secured to said firing pin and supported outwardly of the butt of said handle;

(C) a gas dispersing duct extending through said missile seat, so as to engage the interior of a missile mounted upon said seat at its outer end and to support a gas generating cartridge adjacent said firing pin at its inner end, including:

(i) a breech encompassing said duct at its inner firing end, and

(ii) a shell ejector pivoted in said breech, so as to engage the rim of a shell supported for firing in said duct and to eject said shell axially outwardly of said duct upon pivoting of said handle with respect to said housing;

(D) a projectile having a female element supported upon said duct and within said projectile seat; and

(E) a recovery line supported in said line stowage chamber and attached to said projectile.

2. A line throwing device as in claim **1**, including a line cutter element mounted in said housing.

3. A line throwing device as in claim **1**, said gas dispersing duct including:

(i) a cartridge rim annulus for seating a cartridge in axial alignment with said firing pin at the breech end, and

(ii) an exteriorly mounted O-ring positioned intermediate the duct nozzle and said breech so as to define a sealed gas expansion chamber within said projectile female element.

4. A line throwing device as in claim **1**, including:

(F) an arm extension piece attachable at one end to said handle and firing pin assembly and having a reciprocable hand piece with a trigger pivoted, so as to engage said firing pin knob.

5. A line throwing device as in claim **4**, including:

(A) a shoulder piece detachably mounted upon the butt end of said arm extension piece.

References Cited

UNITED STATES PATENTS

1,307,594	6/1919	Newman	42—72
2,952,209	9/1960	Blanchard	102—89 X
3,004,360	10/1961	Johnson	42—1.2
3,326,082	6/1967	Johnson et al.	89—1

FOREIGN PATENTS

11,201	1903	Great Britain.

OTHER REFERENCES

Remington Blank Cartridge Powered Line Thrower, pp. 1 and 2, NRA Convention, Mar. 30, 1965.

SAMUEL W. ENGLE, Primary Examiner

U.S. Cl. X.R.

42—1; 102—89