Aug. 20, 1940. R. M. RIDLEY 2,212,045

GUN PERFORATOR

Filed July 24, 1939

Fig. 1.

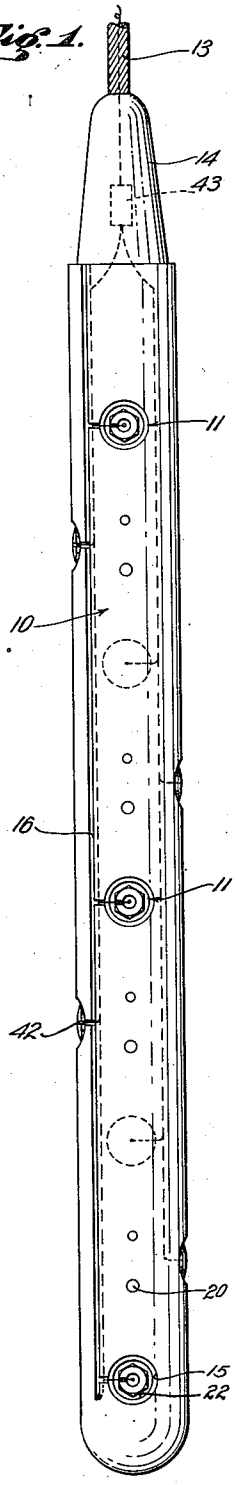

Fig. 2.

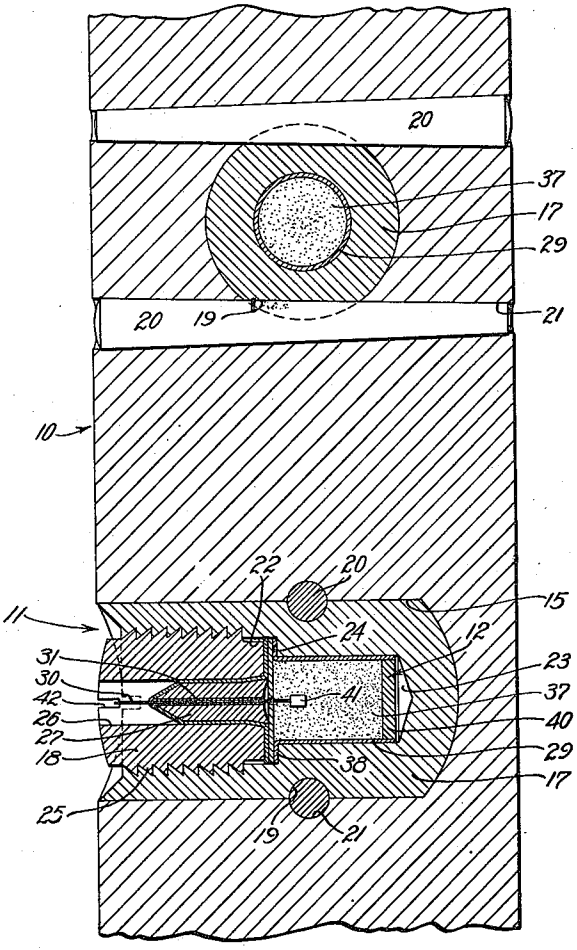

Fig. 3.

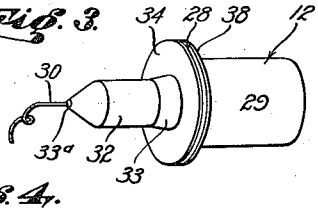

Fig. 4.

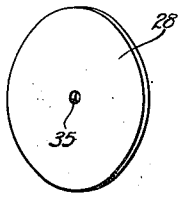

Inventor
RALPH M. RIDLEY
By
His Attorney

Patented Aug. 20, 1940 2,212,045

UNITED STATES PATENT OFFICE

2,212,045

GUN PERFORATOR

Ralph M. Ridley, Whittier, Calif., assignor of one-third to Howard W. Stepp and one-third to Tillman Jines, both of Whittier, Calif.

Application July 24, 1939, Serial No. 286,195

12 Claims. (Cl. 164—0.5)

This invention relates to a well tool and relates more particularly to a perforator for perforating well casing and other tubular objects in wells. A general object of this invention is to provide a dependable, simplified and improved casing perforator of the gun type.

In the drilling and production of deep wells such as oil wells, it is often necessary to perforate the well casing at the productive or oil bearing zones. Mechanical perforators are employed for this purpose where the casing portion to be perforated is in open hole. However, where the portion of the casing to be perforated is embedded in cement a mechanical perforator is not successful as it is incapable of cutting through the surrounding body of cement. Perforators have been developed that discharge projectiles through the casing to perforate the same and these so-called gun perforators are successful in perforating both the casing and the surrounding shell of cement, where the latter is present.

It is the general practice to provide a charge of powder behind each projectile of a gun perforator with a squib at each charge to be electrically ignited. A wiring system is provided to successively ignite the squibs to fire the projectiles in succession. The powder charges are set in openings or sockets in the perforator body or in muzzle blocks or gun units and it has been the general practice to train the ignition wires through body openings which join the inner ends of the powder containing sockets. Deep wells usually contain a column of liquid and the perforator must operate under very high hydrostatic pressure. Leakage often occurs at the gun units resulting in wetting of the powder. The wire-passing openings at the rear of the gun units are common points of leakage. Attempts have been made to overcome this difficulty by running the ignition wires through central openings in the perforator body, but this greatly complicates the construction and makes the tool very expensive. Following each operation of a gun perforator it is necessary to reload the gun units and to thread the ignition wires through the openings and then connect them with the squibs. These operations are time consuming, particularly where the powder, projectiles and squibs are individually handled.

Another object of this invention is to provide a casing perforator of the gun type embodying simple, inexpensive and improved gun units that are easy to load and that are fluid tight and pressure tight.

Another object of this invention is to provide a perforator of the gun type in which it is unnecessary to train the ignition wires through body openings leading to the inner ends of the charge containing chambers, thus eliminating possible points of fluid leakage at the gun units.

Another object of this invention is to provide a perforator of the character mentioned employing cartridges that are readily loaded in the gun units and that each comprise the powder charge, the squib, the projectile and the electrical ignition lead for the squib.

Another object of this invention is to provide a casing perforator of the character mentioned in which novel, effective means are embodied in the gun units to resist or hold the explosive pressure until a very high pressure has been built up, whereupon the pressure is released to fire the projectiles at a high velocity and with great force.

Another object of this invention is to provide an improved cartridge for a gun perforator that is a complete, self-contained unit and embodies a projectile, a powder charge, a squib and a wire lead to the squib, all fully and effectively sealed against fluid pressure leakage.

Another object of this invention is to provide a cartridge of the character just referred to in which the ignition lead or wire extends through the projectile to extend from the outer end of the cartridge for easy, convenient arrangement along the perforator body.

A further object of this invention is to provide cartridges of the character mentioned that may be delivered to the field for installation, and that may be easily and quickly loaded in the gun units of the perforator.

The various objects and features of my invention will be fully understood from the following detailed description of a typical preferred form and application of my invention, throughout which description reference is made to the accompanying drawing, in which:

Fig. 1 is a side elevation of a casing perforator embodying the present invention. Fig. 2 is an enlarged fragmentary longitudinal detailed sectional view of the perforator showing one gun unit in transverse cross section and one gun unit in longitudinal cross section. Fig. 3 is a perspective view of one of the cartridges before installation and Fig. 4 is an enlarged perspective view of the carrier plate of a cartridge.

The improved casing perforator of the present invention may be said to comprise, generally, a

body 10, a plurality of gun units 11 set in the body 10, and cartridges 12 for the units 11.

The perforator body 10 is provided to carry the gun units 11 and is adapted to be run into the well to the portion of the well casing that is to be perforated. In practice the perforator body 10 may be an elongate, generally cylindrical member proportioned for ready passage through the well casing. A cable or line 13 may be employed to run the body 10 into and out of the well. A rope socket 14 at the upper end of the body 10 may receive the line 13 and may secure the body to the line. The lower end of the perforator body 10 is preferably rounded to readily pass through the casing. In accordance with the invention one or more openings or sockets 15 are provided in the body 10 to receive the gun units 11. Where the body 10 is provided with a plurality of sockets 15 it is preferred to space the sockets both longitudinally and circumferentially. For example, in the case illustrated the body 10 is provided with longitudinal rows of spaced sockets 15 with the sockets in adjacent rows vertically offset. The sockets 15 may be simple, cylindrical bores and, in accordance with the invention the inner ends of the sockets are fully closed. Longitudinal grooves 16 are provided in the exterior of the body 10 and there is a groove 16 arranged to be in adjacent relation to the mouths of the sockets 15 of each row of sockets. The grooves 16 preferably extend to the upper end of the body 10 or to the rope socket 14, as illustrated. It is to be observed that the body 10 just described may be very simple and inexpensive in construction and does not have complicated systems of openings, chambers, etc.

The gun units 11 are removably secured in the body sockets 15 and are provided to receive the cartridges 12. The several gun units 11 may be alike or identical. Each unit 11 includes a block 17 and a gun barrel 18. The blocks 17 are cylindrical elements proportioned to fit the sockets 15. The blocks 17 may be held in the sockets 15 in any selected manner. In the preferred construction illustrated each block 17 has two diametrically opposite notches 19 receiving pins or wedges 20 arranged through transverse openings 21 in the body 10. The openings 21 are tapered to receive the wedges 20 and the openings are related so that the wedges 20 are driven in from opposite sides of the body 10 at each gun unit 11. This relationship of the openings 21 and the wedges 20 is best illustrated in the upper portion of Fig. 2. If desired, a single wedge 20 may be employed to retain each block 17 in place. The wedges 20 are readily driven in the openings 21 and may be easily driven out when it is desired to remove the gun units 11 from the body 10.

The blocks 17 are socketed or chambered to receive the cartridges 12 and the barrels 18. A central longitudinal opening 22 enters each block 17 from its forward end. The inner portions of the openings 22 are reduced in diameter to form chambers 23. Forwardly facing annular shoulders 24 occur on the walls of the openings 22 at the forward ends of the chambers 23. The shoulders 24 are preferably flat and normal to the longitudinal axes of the openings 22.

The barrels 18 of the gun units 11 are threaded in the openings 22 at the forward ends of the blocks 17. The threads 25 on the walls of the openings 22 and the blocks 18 are coarse or heavy, as illustrated. The portions of the block openings 22 immediately in front of the shoulders 24 are plain or unthreaded and the inner end portions of the barrels 18 are plain and unthreaded. The forward ends of the barrels 18 are polygonal to be engaged by wrenches, or the like, so that the barrels may be readily threaded in and out of the openings 22. The forward ends of the blocks 17 are preferably recessed to better receive the wrenches for turning the barrels 18. The barrels 18 have central longitudinal bores 26 for the projectiles of the cartridges 12. The bores 26 are cylindrical and of uniform diameter except at their inner end portions. The inner end portions of the bores 26 are tapered or flared rearwardly for the purpose to be subsequently described. It is to be observed that the gun units 11 are simple, inexpensive structures secured in the body sockets 17 by simple, dependable wedge means. The blocks 17 are solid one-piece elements fully closed at their inner ends so that fluid cannot enter their openings 22.

The projectile and powder units or cartridges 12 are important features of the invention. In accordance with the invention each cartridge 12 is a complete self-contained unit readily inserted in a gun unit 11. Each cartridge 12 comprises a projectile 27, a carrier washer or carrier element 28, and a charge container 29. The projectiles 27 are, of course, designed to pierce the well casing and shell of cement around the casing. The forward ends of the projectiles 27 may be pointed or conical to better pierce the casing and cement. The major portions of the projectiles 27 are preferably cylindrical and are somewhat smaller in diameter than the barrel bores 26. The inner end parts of the projectiles 27 are flared to have surfaces at substantially the same angle as the walls of the tapered parts of the bores 26 but are smaller in diameter than the tapered parts of the bores. The maximum diameter of the flared inner ends of the projectiles 27 is substantially equal to the diameter of the bores 26. The projectiles 27 may be formed of any suitable material. In practice the projectiles 27 may be constructed of hardened steel. It is a feature of the invention that the projectiles 27 are tubular to receive or pass ignition wires 30. Longitudinal openings 31 extend through the projectiles 27 from their points to their inner ends. The openings 31 may be quite small in diameter being just sufficiently large to receive the wires 30 which may be insulated in the usual manner.

Jackets 32 of copper or other relatively soft material are provided for the projectiles 27. The jackets 32 encase all but the inner ends of the projectiles 27 and are provided to carry seals 32A for the wires 30 and to aid in preventing pressure from blowing past the projectiles when the charges are fired. The jackets 32 conform to the projectiles 27 and fit the bores 26. The inner portions 33 of the jackets 32 are conical or tapered. The tapered portions 33 of the jackets 32 are designed to fit the tapered inner parts of the bores 26. Radial or lateral annular flanges 34 are provided on the inner ends of the jackets 32. The flanges 34 are flat and are adapted to be engaged by the inner ends of the barrels 18 as will be later described.

The carrier washers or carrier elements 28 form common supports or carriers for the projectiles 27 and the containers 29 serving as connectors between the projectiles and the containers. The elements 28 are annular members having substantially central apertures or openings 35 which pass the wires 30. The carrier elements 28 are proportioned to be received in the block openings 22. The flanges 34 of the jackets 32 are

secured to the carrier elements 28 by sweating, welding, or the like. It is preferred to connect the flanges 34 with the elements 28 in such a manner that dependable pressure-tight and fluid-tight seals are formed. It will be observed that the carrier elements 28 cover the inner ends of the projectiles 27.

The containers 29 are provided to hold the explosive or powder charges 37. The containers 29 are designed to fit the chambers 23 of the blocks 17. As illustrated, the containers 29 are hollow, cylindrical members secured at their forward ends to the washer elements or carrier elements 28. Annular radial flanges 38 are provided on the forward ends of the containers 29 and are secured to the elements 28. The flanges 38 may be sweated or welded to the elements 28 and the connections are such that positive fluid-tight and pressure-tight seals are formed. The flanges 38 are flat and their rear surfaces are adapted to bear and seal against the shoulders 24 on the walls of the openings 22.

When the barrels 18 are threaded in and tightened down their inner ends cooperate with the flanges 34 so that the flanges 34, the peripheral parts of the elements 28 and the flanges 38 are clamped between the inner ends of the barrels and the shoulders 24. The jackets 32 are formed of copper or other relatively soft material and the containers 29 may be formed of a like material so that the flanges 34 and 38 effectively seal with the inner ends of the barrels 18 and the shoulders 24. The fluid-tight and pressure-tight seals provided at the flanges 34 and 38, as just described, positively prevent liquid from leaking around the cartridges 12 and entering the chambers 23. As illustrated the containers 29 are tubular parts provided at their forward ends with the above-described flanges 38 and closed at their inner ends by seals or discs 40. The discs 40 are, of course, packed in the containers 29 after the charges 37 have been filled in the containers. This construction assures the safe easy charging of the containers.

Ignitors or squibs 41 are provided in the charge containers 29 to ignite or fire the powder 37. The wires 30 pass inwardly through the openings 31 and the openings 35 to connect with the squibs 41. The squibs 41 may be placed at the most advantageous positions in the containers 29. The wires 30 for igniting the squibs 41 extend from the forward ends of the barrels 26 and are trained through the body grooves 16. The grooves 16 are located to be immediately adjacent the outer ends of the sockets 15 and may be connected with the sockets by short notches 42 in the body 10 and the outer ends of the blocks 18. The wires 30 are trained through the notches 42 and the grooves 16 to suitable means for controlling the ignition of the squibs 41. In the case illustrated the wires 30 extend upwardly through the grooves 16 to a distributor 43, or the like, provided in the rope socket 14. The present invention is not primarily concerned with the means for controlling the ignition of the squibs 41 and any suitable means or device may be utilized for this purpose.

In the use and operation of the perforator of the present invention the parts are assembled, as illustrated in Figs. 1 and 2 of the drawing, and the perforator is run into the well on the line 13. The cartridges 12 are complete, self-contained assemblies, easily arranged in the gun units 11. The barrels 18 may be quickly tightened down to secure the cartridges 12 in place and to provide the pressure-tight and fluid-tight seals at the flanges 34 and 38, as described above. The wires 30 leading from the forward ends of the pierced projectiles 27 are readily trained through the external notches 42 and grooves 16. The gun units 11 may be quickly loaded with the cartridges 12 and the ignition wires 30 may be easily arranged to condition the perforator for operation. It is to be noted that it is unnecessary to train the ignition wires 30 through internal passages or chambers in the body.

When the perforator has been lowered to the part of the casing to be perforated the ignition system is actuated or controlled to discharge the cartridges 12. It is usually preferred to successively discharge the cartridges. When a squib 41 is ignited the charge 37 is, of course, fired. The resultant pressure immediately builds up in the container 29 and the chamber 23. The washer element or carrier element 28 resists the immediate discharge of the pressure so that a maximum pressure is built up. The flaring inner end of the projectile 17 and the flaring portion 33 of the jacket 32 wedge in the flaring portion of the bore 26 to resist the expulsion of the projectile and to aid the element 28 in resisting the immediate discharge of the pressure. The tapered jacket portion 33 and the tapered tail of the projectile offer substantial resistance to the immediate discharge of the pressure. When a very heavy pressure has been built up it discharges through the element 28 and expels the projectile 27 from the bore 26. The soft metal jacket 32 breaks or shears off either at the pointed end of the projectile or at the tapered tail of the projectile or breaks into fragments. The ignition wires 30 are, of course, broken away and the projectile 27 discharges from the bore 26 and pierces the well casing and the surrounding body of cement where the same is present. Following the operation of the perforator it is removed from the well and its gun units 11 are reloaded and the ignition wires 30 are again connected with the leads of the squibs 41 to condition the tool for further use.

It is to be observed that the piercing of the projectiles 27 for the reception of the ignition wires 30 eliminates the necessity of providing openings at the inner ends of the gun unit blocks 17 and the inner ends of the blocks are completely closed so that fluid cannot enter them. Thus it is only necessary to seal the gun units 11 against the entrance of fluid pressure at their forward ends. This is fully accomplished by the seals 33^a around the wires 30 and the seals occurring at the flanges 34 and 38. There is little or no danger of the powder charges 37 becoming wet and ineffective.

Having described only a typical preferred form and application of my invention, I do not wish to be limited or restricted to the specific details herein set forth, but wish to reserve to myself any variations or modifications that may appear to those skilled in the art or fall within the scope of the following claims:

Having described my invention, I claim:

1. A casing perforator for perforating casing in a well comprising a body to be lowered into the well, a gun unit carried by the body, an explosive charge in the unit, a squib for igniting the charge, a projectile in the unit in front of the charge to be ejected by the charge, the projectile having an opening extending longitudinally through it, and an ignition wire passing rearwardly through the opening to the squib for igniting the same.

2. In a gun perforator for perforating well casing in a well, a barrel, a powder charge at the

inner end of the barrel, a squib for firing the charge, a projectile in the barrel to be fired by the charge, the projectile having a longitudinal opening extending completely through it, and means for igniting the squib comprising a source of electrical current external of the barrel, and an ignition wire from said source extending inwardly through the opening and leading to the squib to fire the same.

3. In a perforator for perforating well casing in a well, a gun unit having a chamber and a barrel, an explosive charge in the chamber, a source of electrical current external of the barrel, a squib for the charge having an ignition lead extending to said source of current, and a projectile in the barrel having a longitudinal opening extending completely through it for passing the ignition lead inwardly to the squib.

4. In a perforator, a gun unit having a powder chamber and a bore, a projectile in the bore, the projectile having a longitudinal opening extending through it, ignition means comprising an ignitor in the chamber and an electrical conductor extending through the opening to the ignitor, and means sealing about the wire at the opening of the projectile to prevent the leakage of fluid through the opening.

5. A projectile cartridge for a casing perforator comprising a projectile, the projectile having a longitudinal opening extending through it, a charge container at the rear of the projectile, an ignitor in the container, a carrier element at the rear of the projectile carrying the projectile and container and having an opening communicating with the opening in the projectile, and an ignition lead extending rearwardly through said openings to the ignitor.

6. A projectile cartridge for a casing perforator comprising a projectile, the projectile having a longitudinal opening, a jacket on the projectile, a charge container at the rear of the projectile, an ignitor in the container, a carrier element between the projectile and the container supporting the jacket and container and closing the forward end of the container, the carrier element having an opening, and an ignition lead extending through said openings to the ignitor.

7. In a casing perforator, a body, a gun unit carried by the body comprising a block having a socket in its forward end, a shoulder on the wall of the socket, and a barrel inserted in the socket, the inner end of the socket being closed, and a cartridge insert in the gun unit comprising, a container in the socket, an element extending across the forward end of the container and having an opening, a projectile in the barrel carried by the element and having an opening, an ignitor in the container having a conductor extending outwardly through said openings, means sealing about the conductor to prevent leakage through the openings, and a sealing flange on the insert clamped between the barrel and flange to prevent leakage to the container.

8. In a casing perforator, a body, a gun unit carried by the body comprising a block having a socket in its forward end, a shoulder on the wall of the socket, and a barrel threaded in the socket, and a cartridge in the unit comprising a charge container in the socket, a flange on the container for sealing with the shoulder, a projectile in the barrel having a longitudinal opening, a washer element sealed with and secured to the flange and carrying the projectile, the washer element and flange being clamped between the barrel and the shoulder to provide a seal, and an ignitor in the container having an electrical conductor extending outwardly through the washer element and the opening of the projectile.

9. A casing perforator comprising a body having a socket and an opening transverse of the socket, a gun unit comprising a block in the socket, and a wedge inserted in the opening and cooperating with the unit to hold the same in the socket.

10. A casing perforator comprising a body having a socket and an opening transverse of the socket, a gun unit comprising a block in the socket, the block having a notch registering with the opening, and a wedge in the opening cooperating with the notch to hold the block in the socket.

11. A casing perforator comprising a body having a socket and a groove leading to the socket, a gun unit in the socket, a cartridge in the gun unit comprising an explosive means, and a projectile having a longitudinal opening and disposed in front of the explosive means, and ignition means comprising a wire trained through the groove and passing through the opening to the said means.

12. A casing perforator comprising a body having spaced sockets and external grooves leading to the sockets, gun units in the sockets, cartridges in the gun units comprising explosive means, and projectiles in front of the explosive means having longitudinal openings, and ignition means comprising wires trained through the grooves and passing inwardly through the openings to the explosive means.

RALPH M. RIDLEY.