US 20130315099A1

(19) United States

(12) Patent Application Publication

(10) Pub. No.: US 2013/0315099 A1

(43) Pub. Date: Nov. 28, 2013

Chen et al.

(54) METHOD AND COMMUNICATION DEVICE FOR ROUTING UNICAST AND MULTICAST MESSAGES IN AN AD-HOC WIRELESS NETWORK

(71) Applicant: **Telcordia Techmologies, Inc.**, Piscataway, NJ (US)

(72) Inventors: **Wai Chen**, Basking Ridge, NJ (US); **Taek-Jin Kwon**, Morganville, NJ (US); **Toshiro Hikita**, Fort Lee, NJ (US); **Ryokichi Onishi**, Jersey City, NJ (US); **John Lee**, Howell, NJ (US)

(73) Assignee: **Telcordia Techmologies, Inc.**, Piscataway, NJ (US)

(21) Appl. No.: **13/949,146**

(22) Filed: **Jul. 23, 2013**

Related U.S. Application Data

(63) Continuation of application No. 11/585,047, filed on Oct. 23, 2006, now Pat. No. 8,520,673.

Publication Classification

(51) **Int. Cl.**
H04W 84/18 (2006.01)

(52) **U.S. Cl.**
CPC *H04W 84/18* (2013.01)
USPC **370/254**; 370/312

(57) **ABSTRACT**

A method and communication device for routing unicast and multicast messages. The method for routing a unicast message includes receiving a first control packet including routing parameters from a group header node, updating a routing table based upon the routing parameters, receiving a second control packet including additional routing parameters from a group node, updating the routing table based upon the additional routing parameters and generating a forwarding table from the routing table when both of the updated steps are completed. The unicast message is routed based upon the forwarding table. A method for routing a multicast message comprises receiving the multicast message, determining if a multicast group destination for the multicast message is in a multicast forwarding table (MFT), determining if the multicast message has been previously forwarded and forwarding the multicast message if the message was not previously forwarded and the multicast group destination is in the MFT.

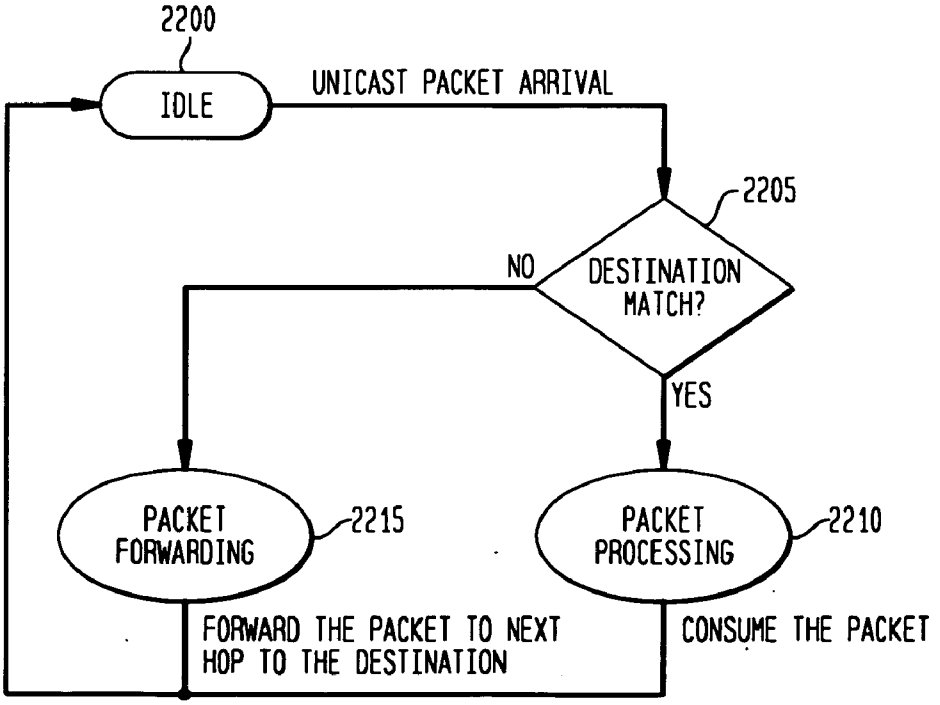

FIG. 1

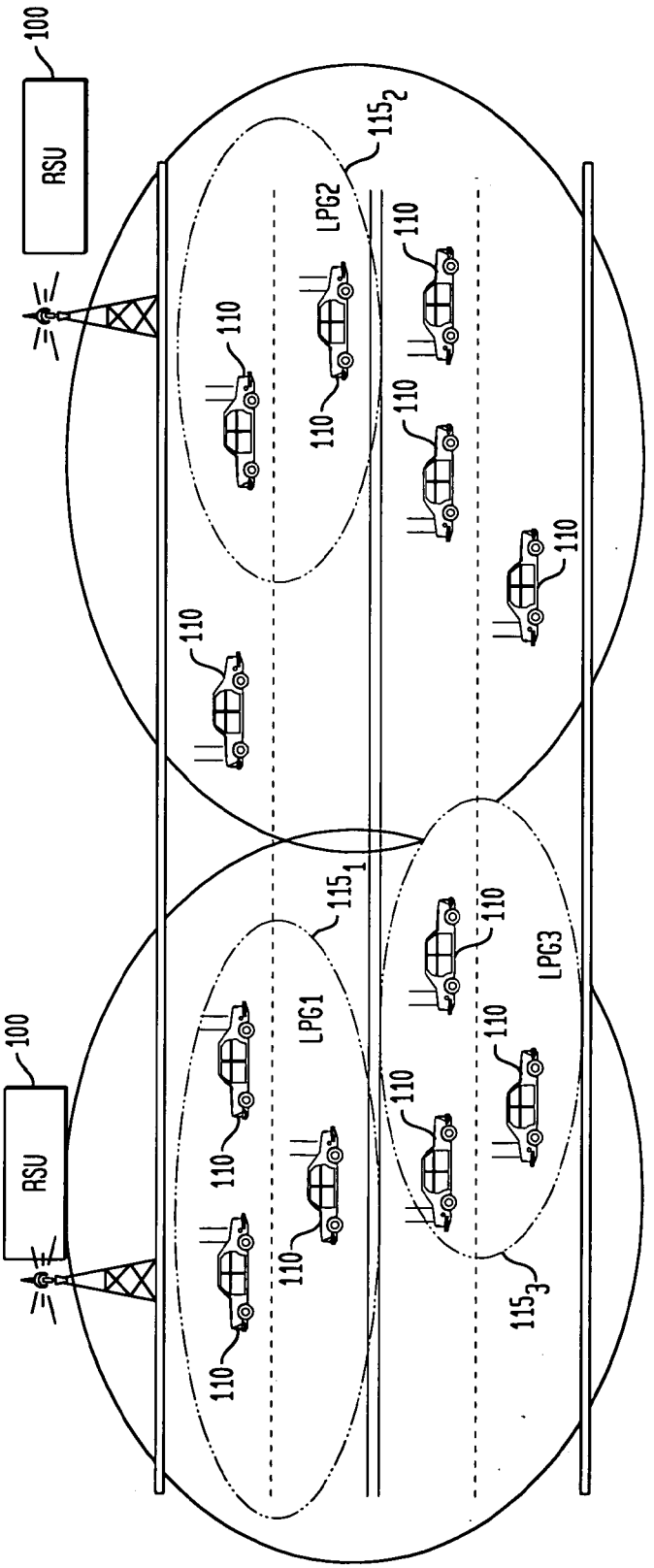

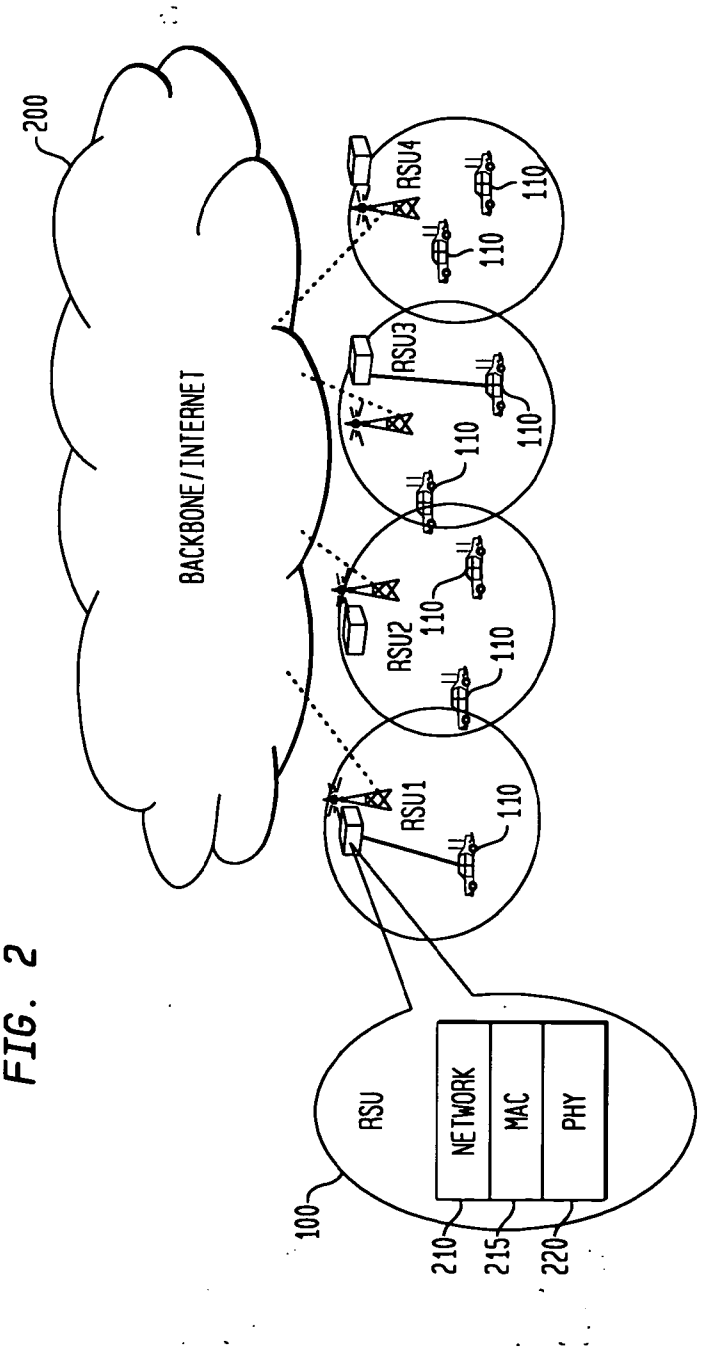
200
BACKBONE/INTERNET
RSU1
RSU2
RSU3
RSU4
110
RSU
NETWORK
MAC
PHY
100
210
215
220

FIG. 2

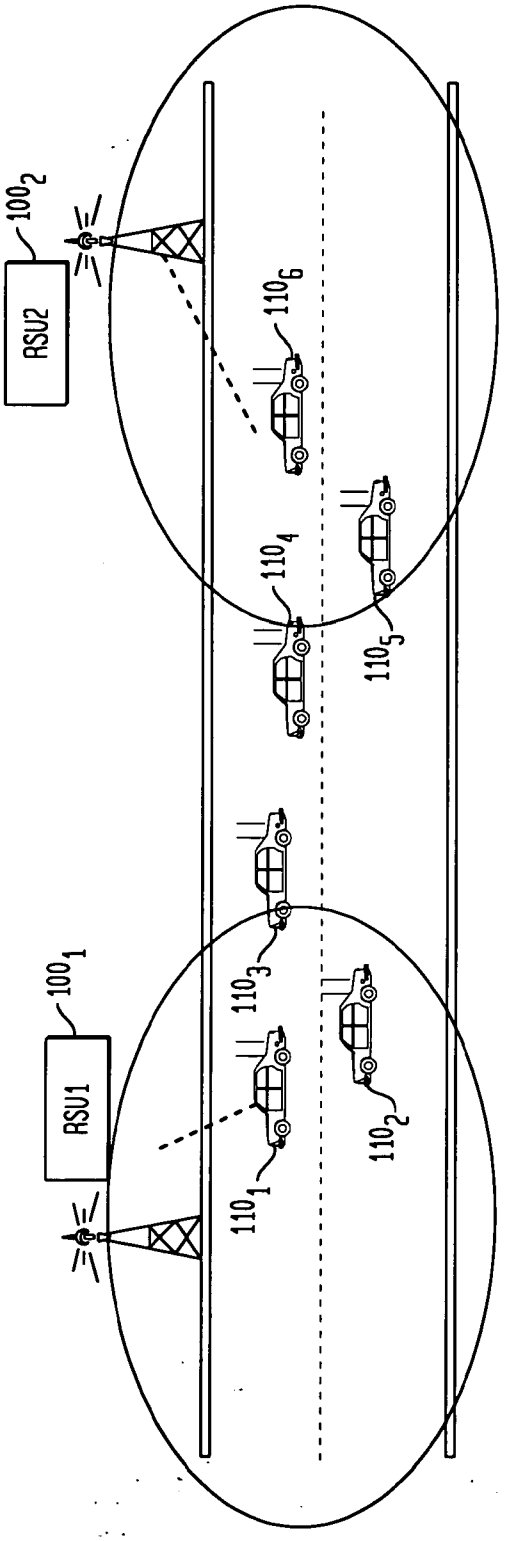

FIG. 3A

FIG. 3B

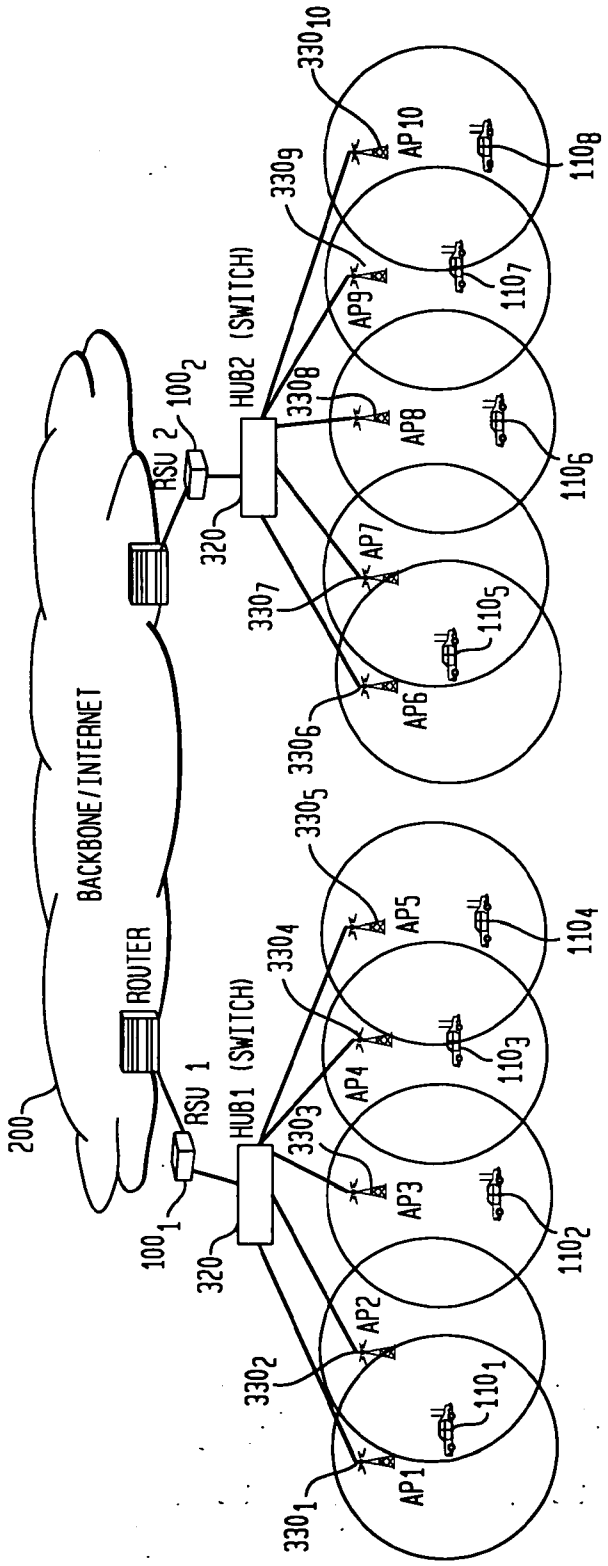
200
BACKBONE/INTERNET
ROUTER
RSU 1
RSU 2
HUB1 (SWITCH)
HUB2 (SWITCH)
100 1
100 2
320
320
330 1
330 2
330 3
330 4
330 5
330 6
330 7
330 8
330 9
330 10
AP1
AP2
AP3
AP4
AP5
AP6
AP7
AP8
AP9
AP10
110 1
110 2
110 3
110 4
110 5
110 6
110 7
110 8

FIG. 3C

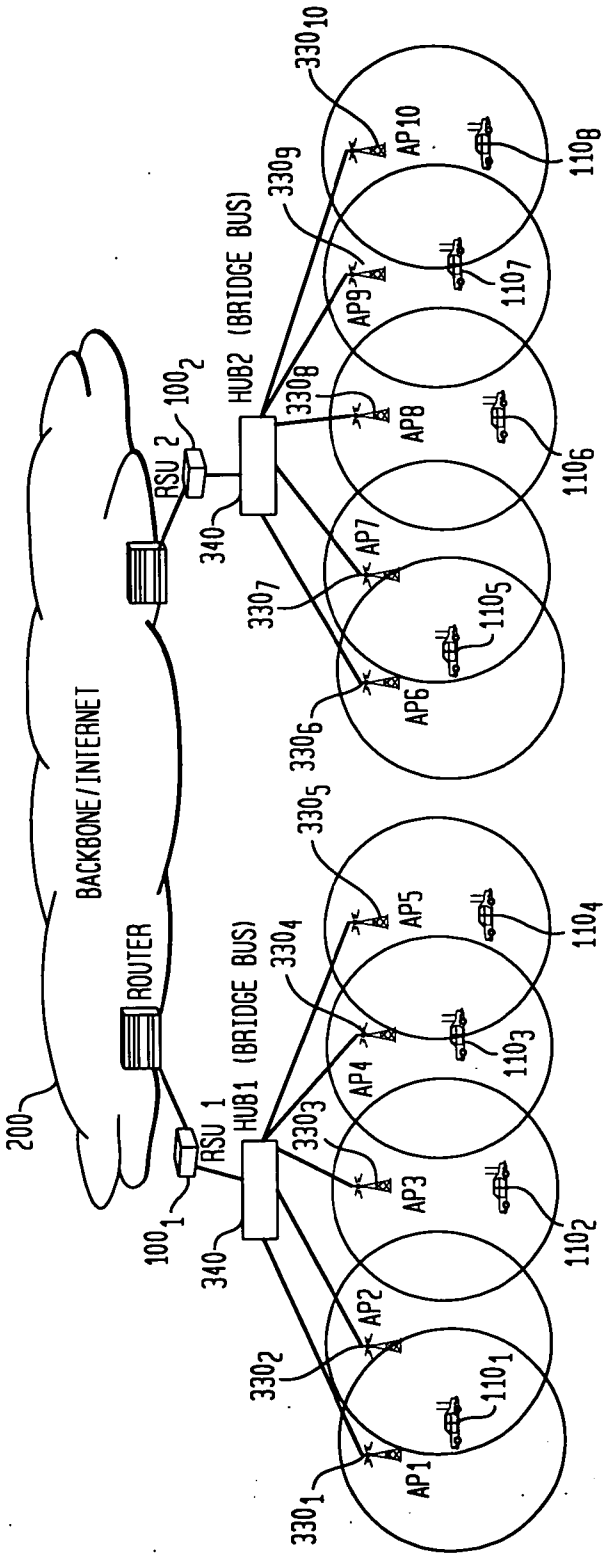
200
BACKBONE/INTERNET
ROUTER
RSU 1
RSU 2
HUB1 (BRIDGE BUS)
HUB2 (BRIDGE BUS)
100 1
100 2
340
340
AP1
AP2
AP3
AP4
AP5
AP6
AP7
AP8
AP9
AP10
330 1
330 2
330 3
330 4
330 5
330 6
330 7
330 8
330 9
330 10
110 1
110 2
110 3
110 4
110 5
110 6
110 7
110 8

FIG. 4

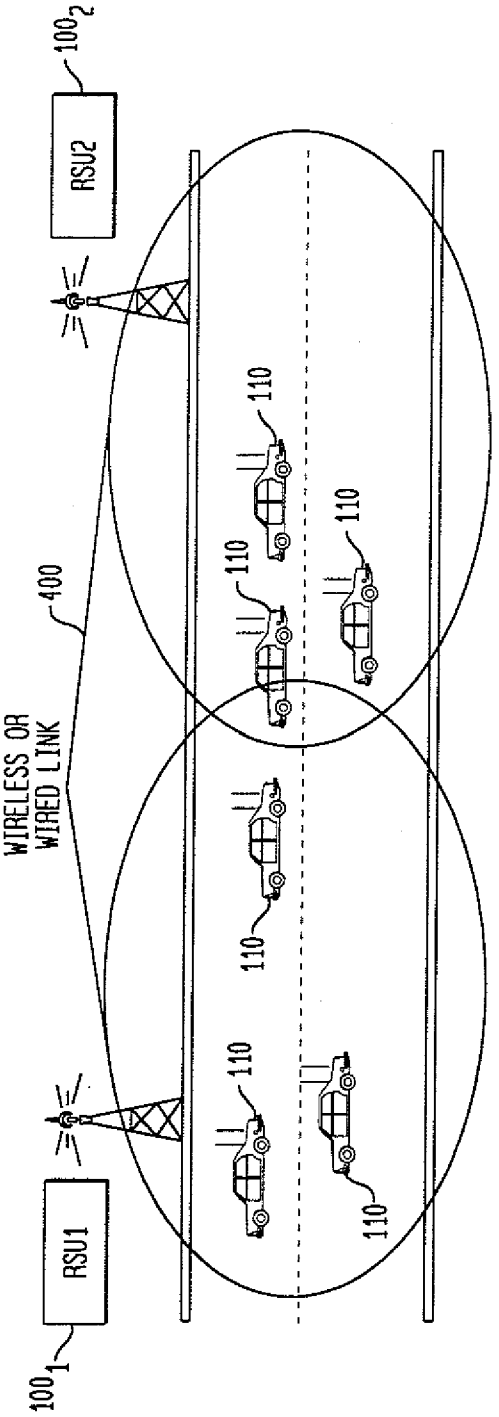
100 2
RSU2
110
110
110
400
WIRELESS OR WIRED LINK
110
110
110
RSU1
100 1

FIG. 5

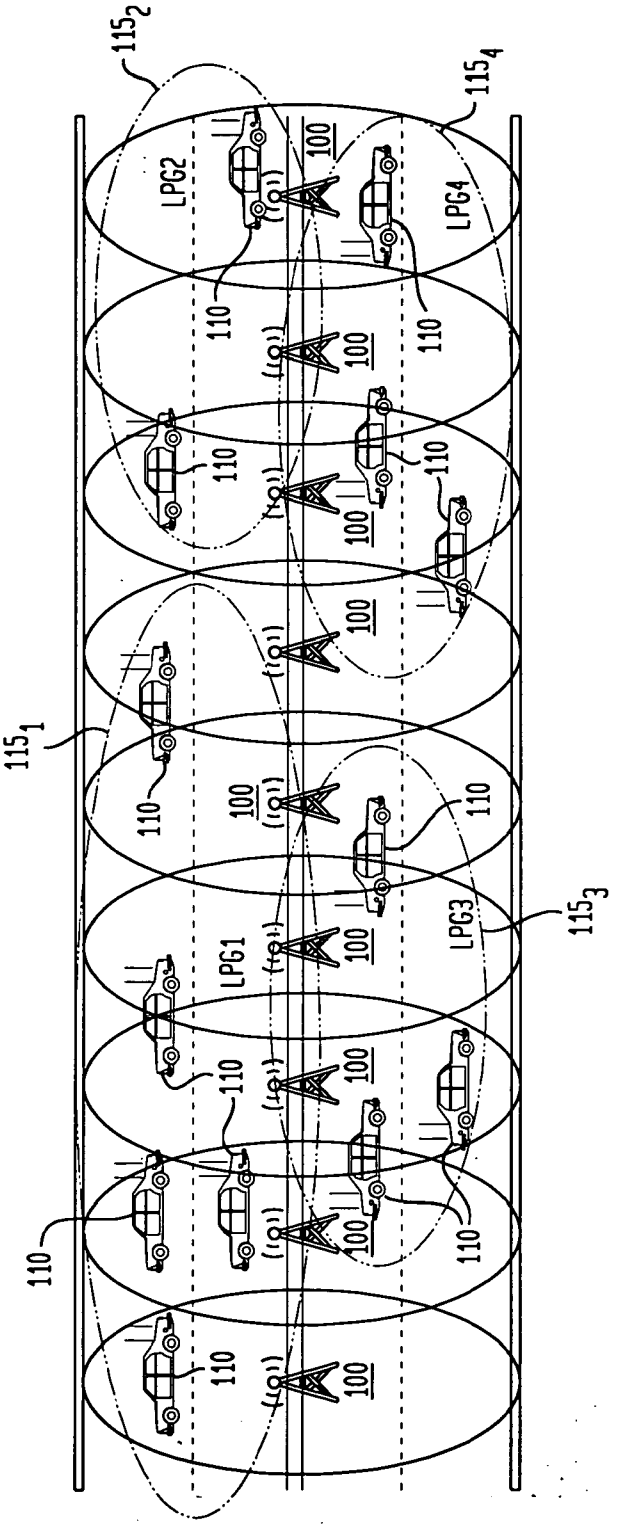

FIG. 6

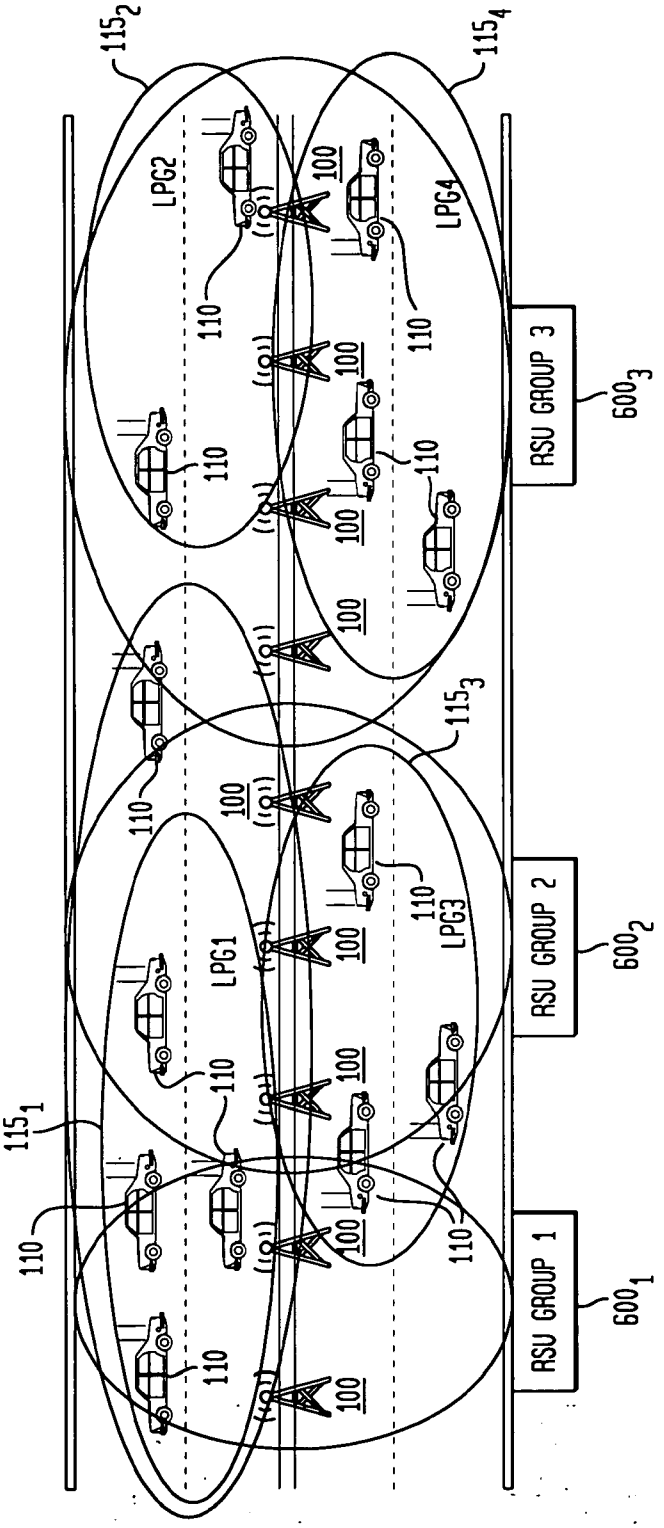
115_2
115_4
115_3
115_1
LPG2
LPG4
LPG1
LPG3
110
100
RSU GROUP 3
RSU GROUP 2
RSU GROUP 1
600_3
600_2
600_1

FIG. 7

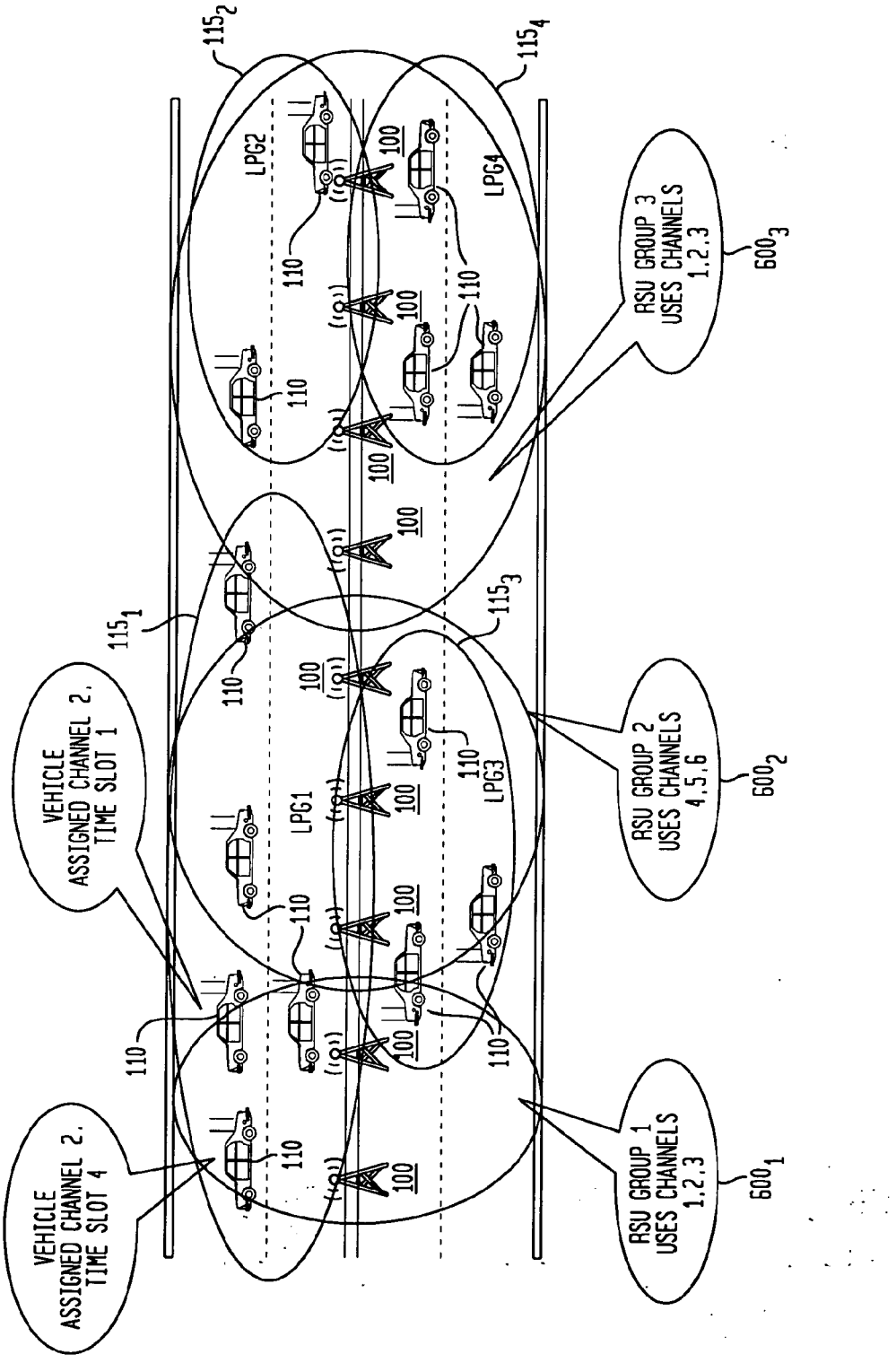
VEHICLE ASSIGNED CHANNEL 2. TIME SLOT 1
VEHICLE ASSIGNED CHANNEL 2. TIME SLOT 4
RSU GROUP 1 USES CHANNELS 1.2.3
RSU GROUP 2 USES CHANNELS 4,5,6
RSU GROUP 3 USES CHANNELS 1.2.3
LPG1
LPG2
LPG3
LPG4
600 1
600 2
600 3
100
110
115 1
115 2
115 3
115 4

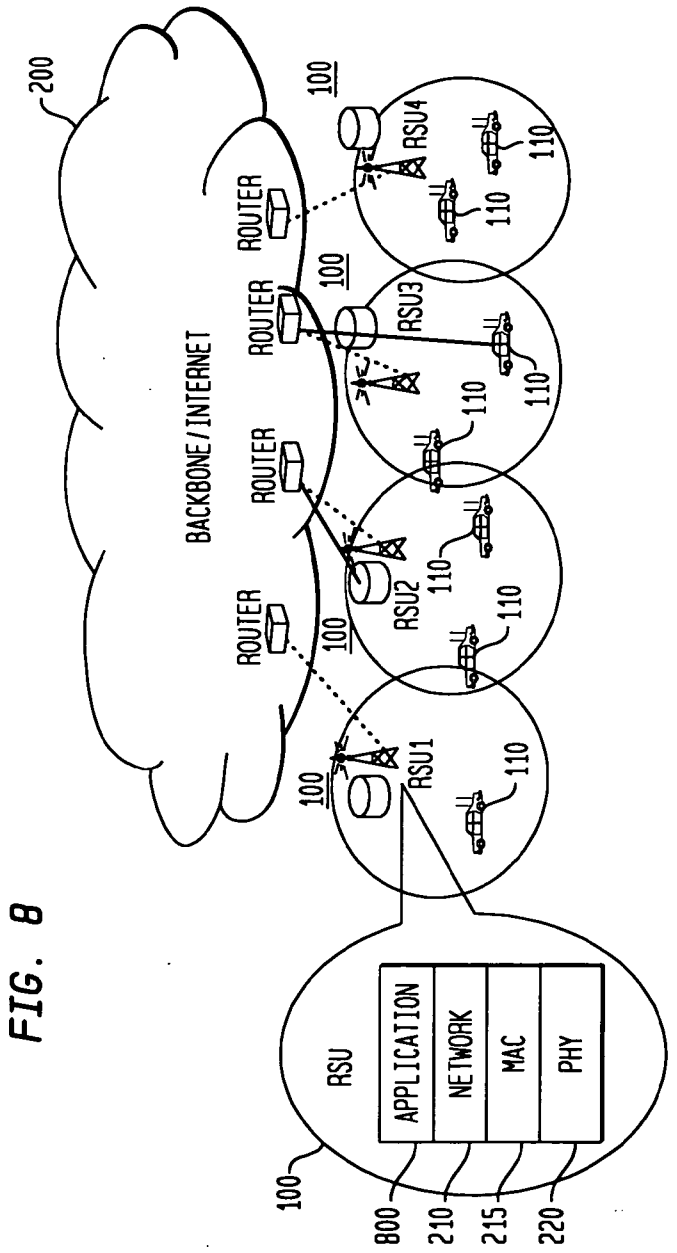
200
BACKBONE / INTERNET
ROUTER
ROUTER
ROUTER
ROUTER
100
100
100
100
RSU1
RSU2
RSU3
RSU4
110
RSU
APPLICATION
NETWORK
MAC
PHY
800
210
215
220

FIG. 8

FIG. 9

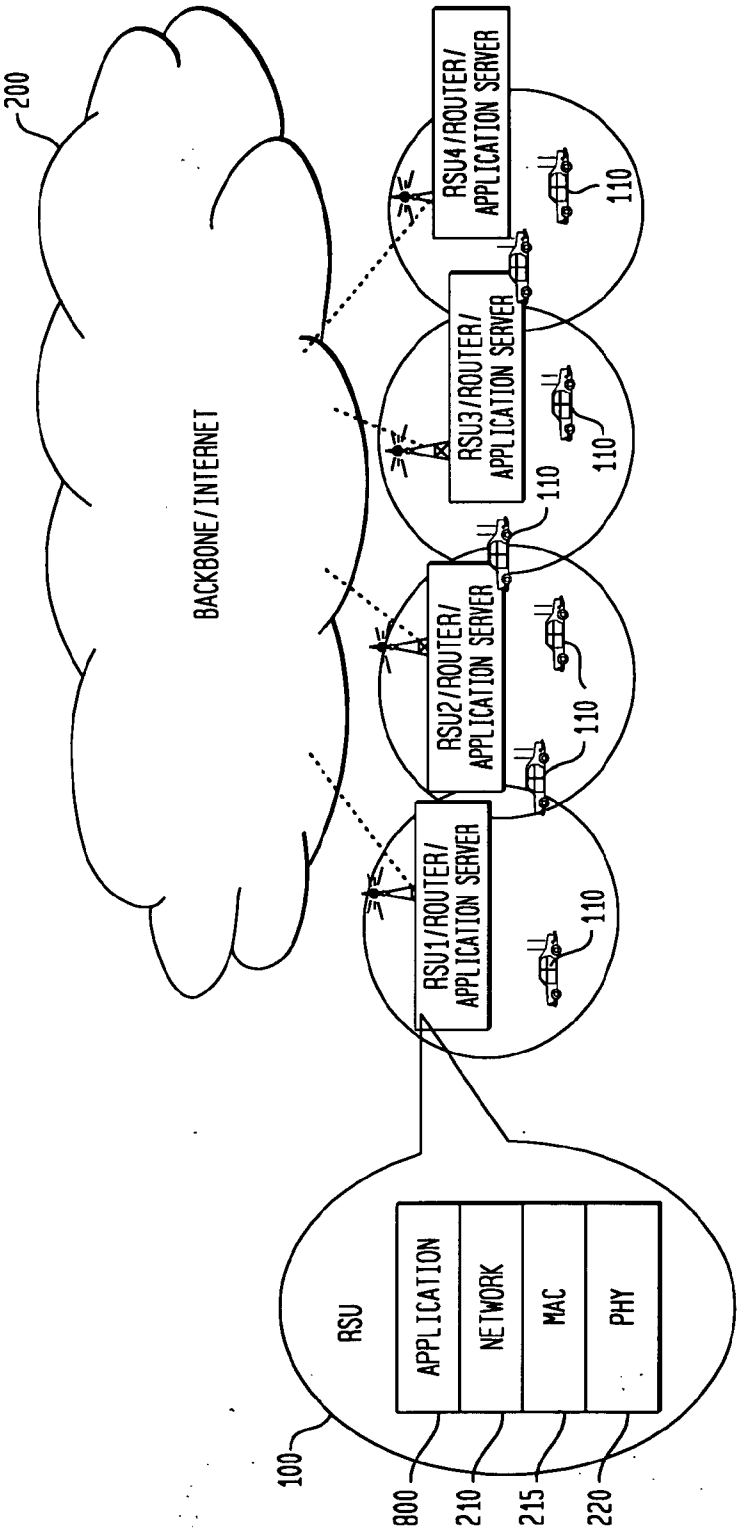
200
BACKBONE/INTERNET
RSU1/ROUTER/ APPLICATION SERVER
RSU2/ROUTER/ APPLICATION SERVER
RSU3/ROUTER/ APPLICATION SERVER
RSU4/ROUTER/ APPLICATION SERVER
110
RSU
APPLICATION
NETWORK
MAC
PHY
100
800
210
215
220

FIG. 10

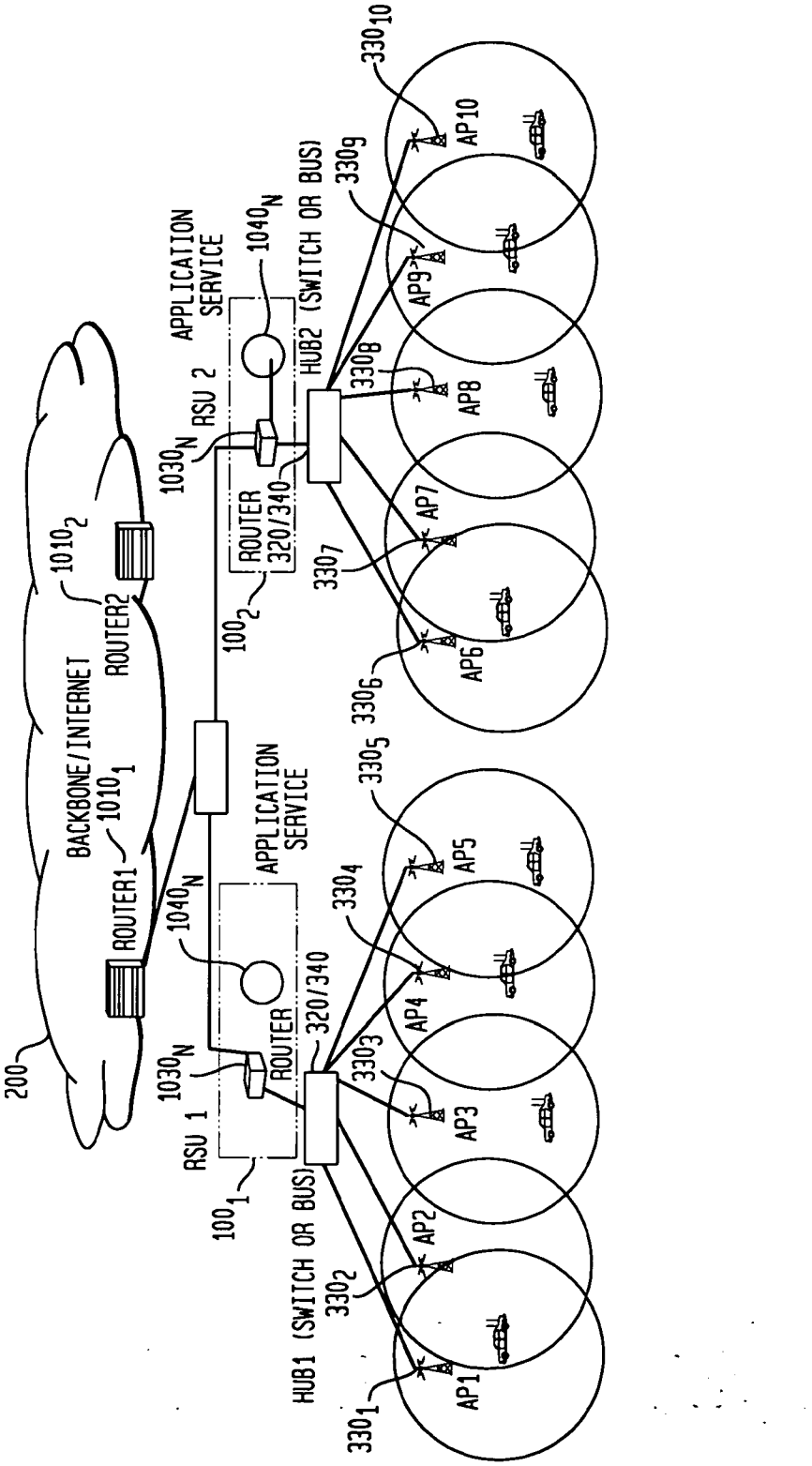
200
BACKBONE/INTERNET
ROUTER1
ROUTER2
1010 1
1010 2
1040 N
APPLICATION SERVICE
ROUTER
320/340
1030 N
RSU 1
RSU 2
100 1
100 2
HUB1 (SWITCH OR BUS)
HUB2 (SWITCH OR BUS)
330 1
330 2
330 3
330 4
330 5
330 6
330 7
330 8
330 9
330 10
AP1
AP2
AP3
AP4
AP5
AP6
AP7
AP8
AP9
AP10

FIG. 11

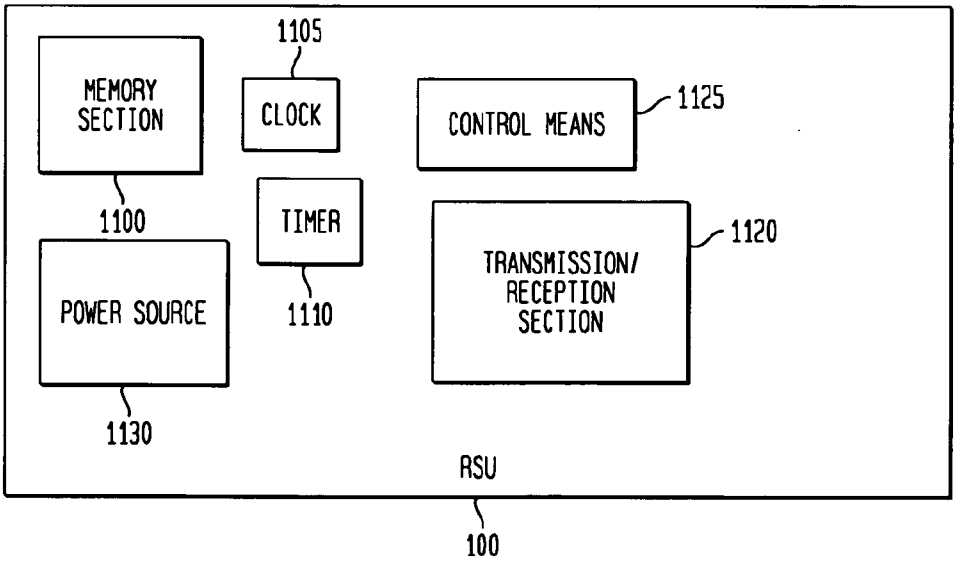
1105
MEMORY SECTION
CLOCK
CONTROL MEANS
1125
1100
TIMER
1120
TRANSMISSION/ RECEPTION SECTION
POWER SOURCE
1110
1130
RSU
100

FIG. 12

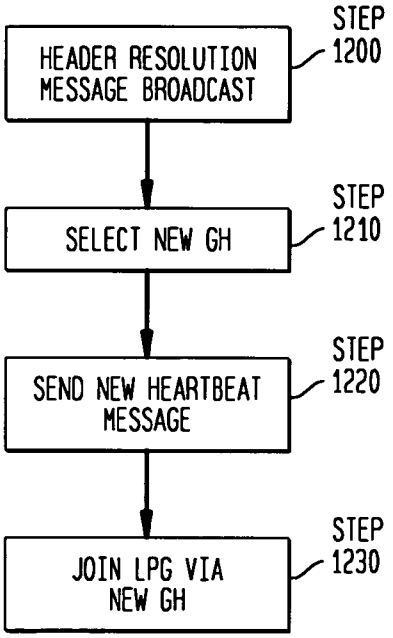
HEADER RESOLUTION MESSAGE BROADCAST
STEP 1200
SELECT NEW GH
STEP 1210
SEND NEW HEARTBEAT MESSAGE
STEP 1220
JOIN LPG VIA NEW GH
STEP 1230

FIG. 13

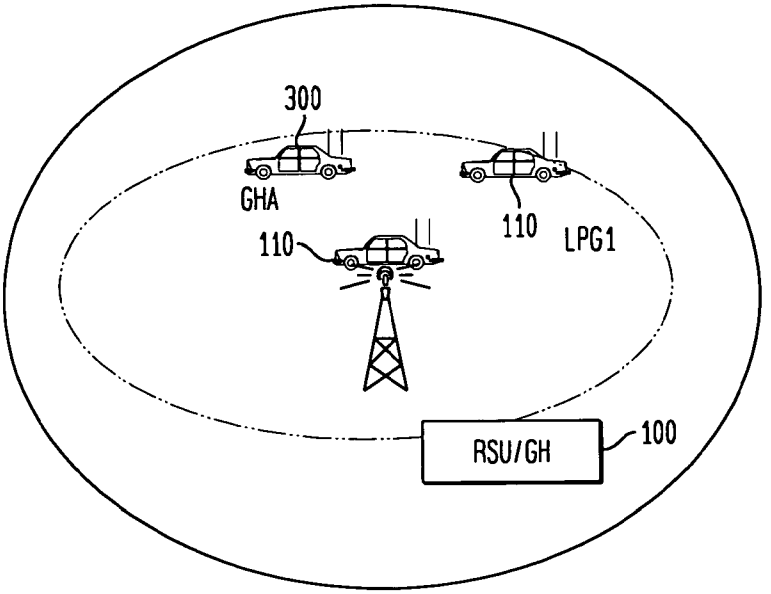

FIG. 14

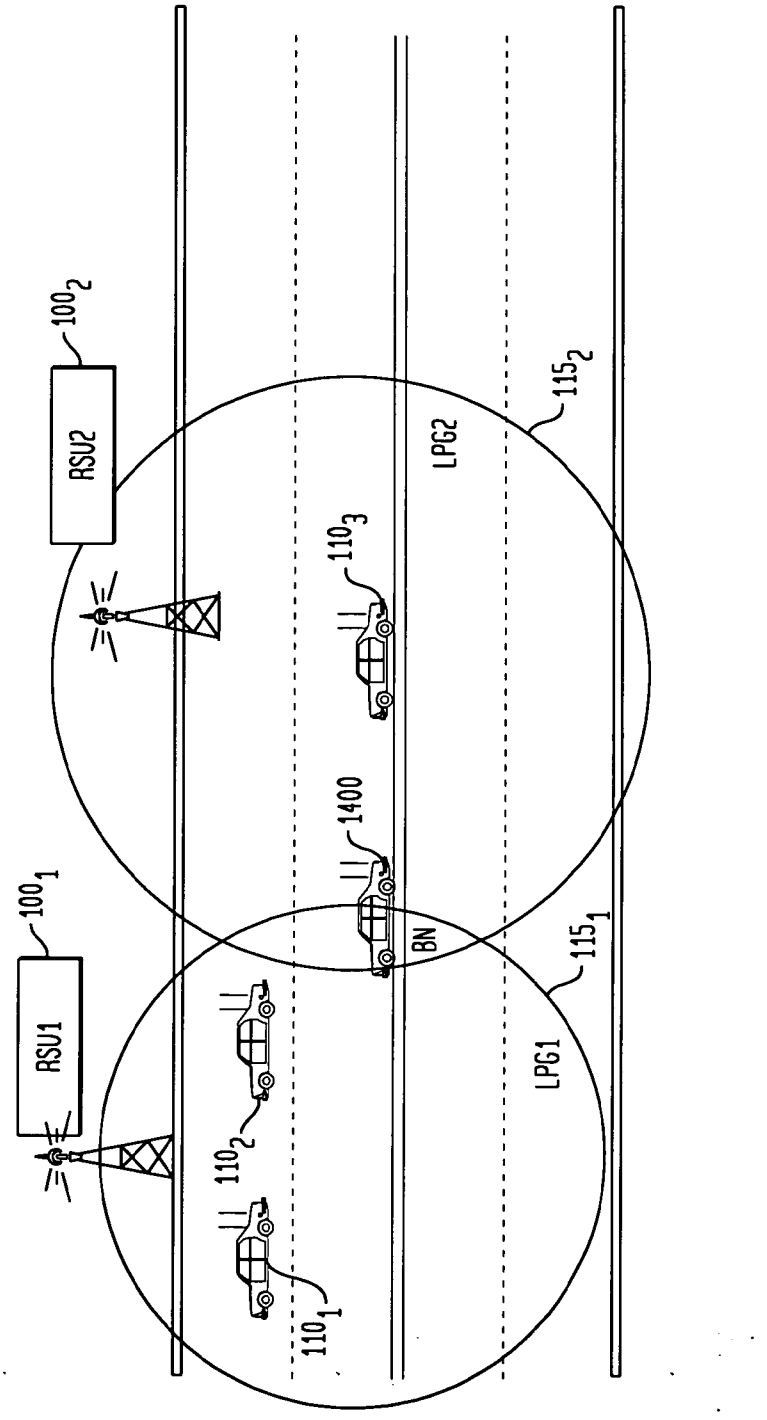
100_2
RSU2
115_2
LPG2
110_3
1400
BN
100_1
RSU1
115_1
LPG1
110_2
110_1

FIG. 15

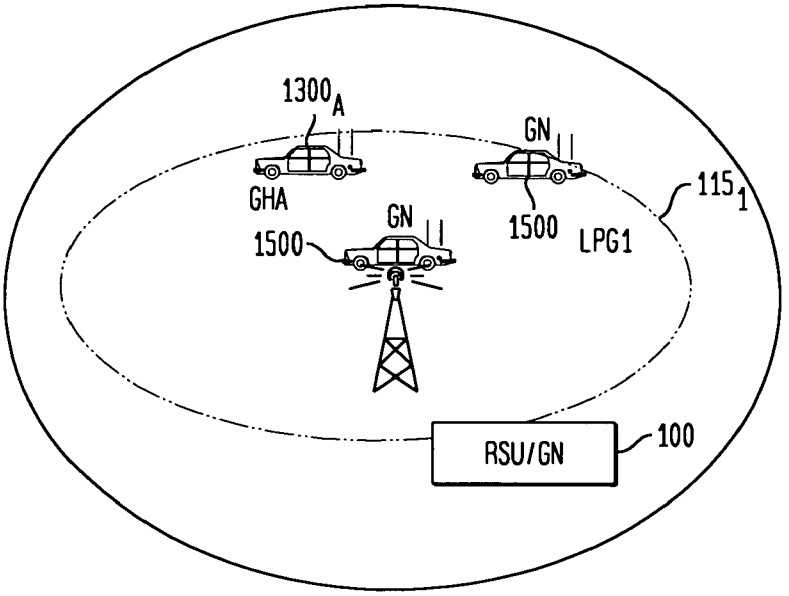

FIG. 16

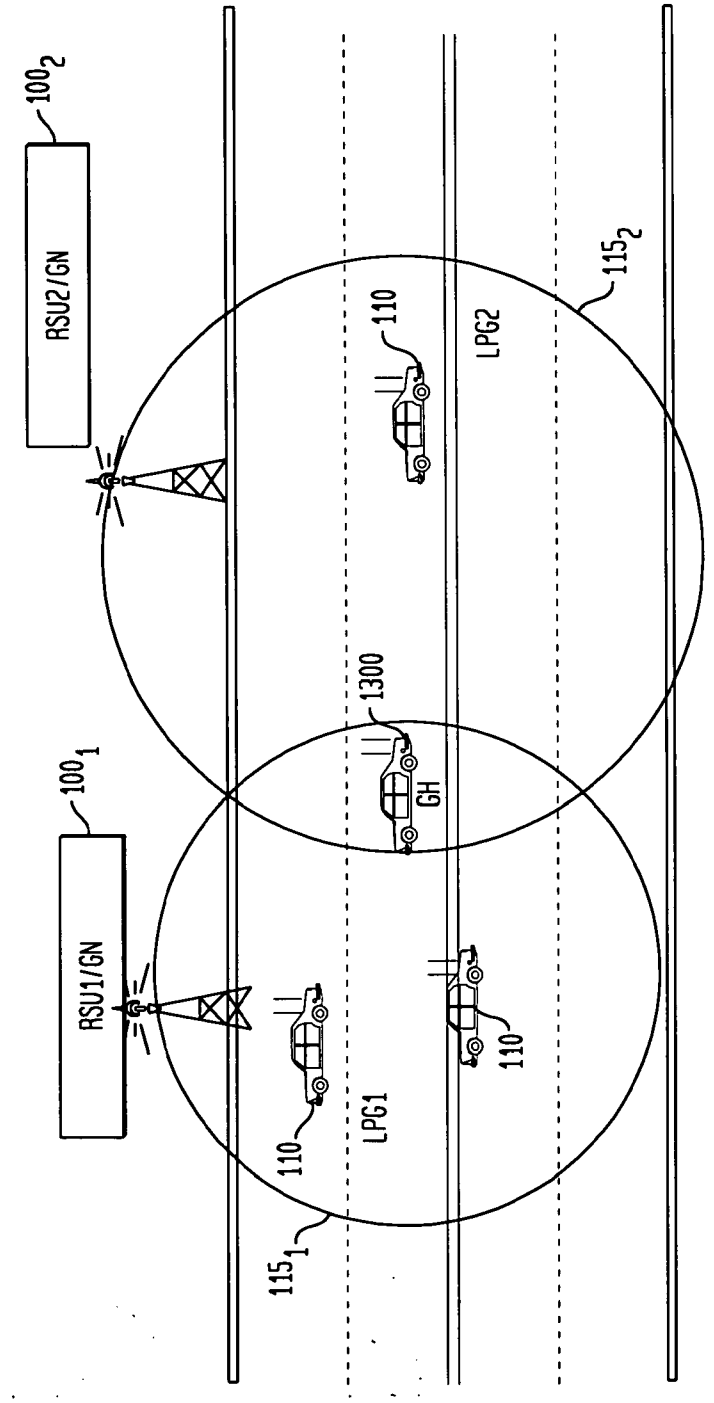
100_2
RSU2/GN
110
LPG2
115_2
1300
GH
100_1
RSU1/GN
110
LPG1
110
115_1

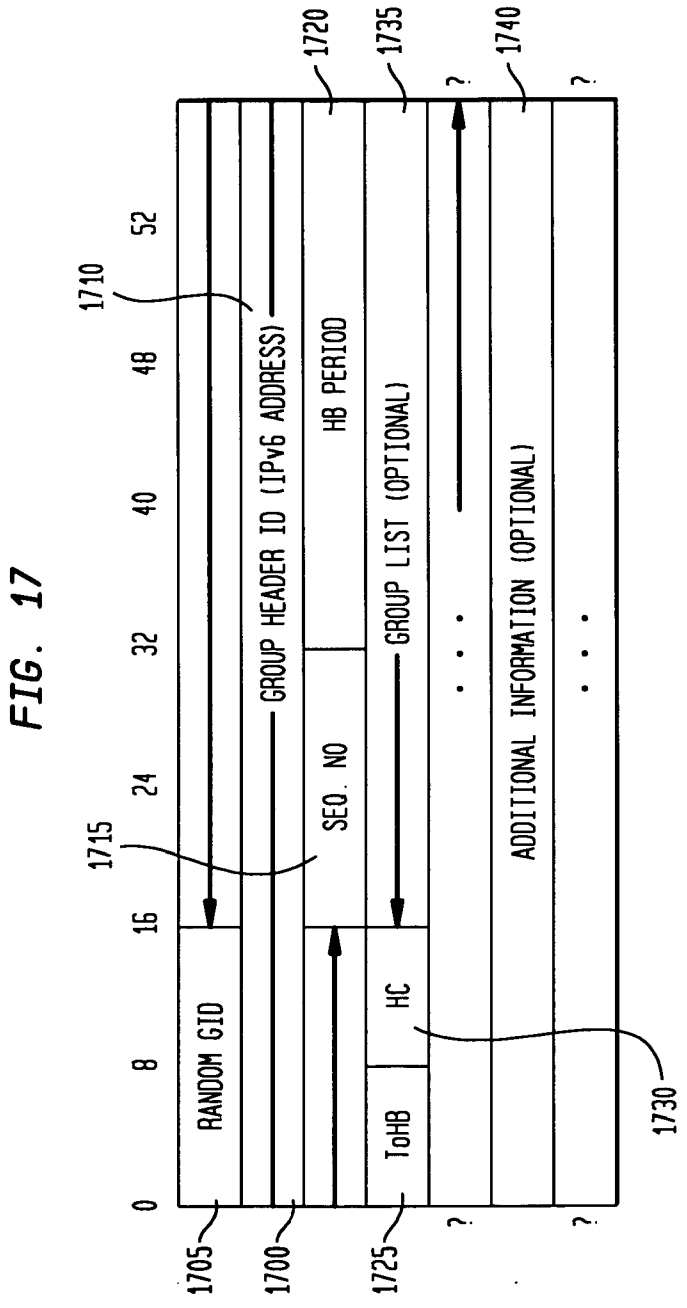
0
8
16
24
32
40
48
52
RANDOM GID
SEQ. NO
HB PERIOD
ToHB
HC
GROUP HEADER ID (IPv6 ADDRESS)
GROUP LIST (OPTIONAL)
ADDITIONAL INFORMATION (OPTIONAL)
1705
1700
1725
1715
1710
1720
1735
1740
1730

FIG. 17

FIG. 18

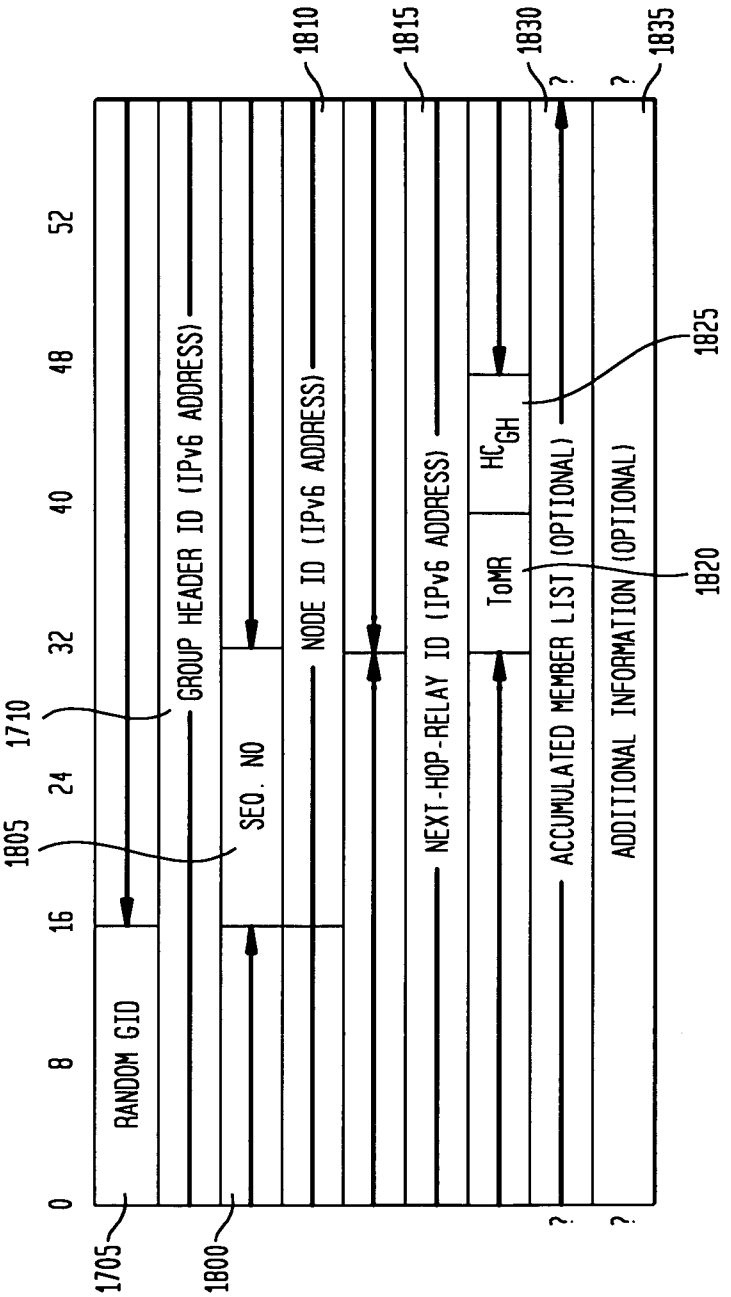
0
8
16
24
32
40
48
52
1705
1800
1805
1710
1810
1815
1830
1835
1825
1820
RANDOM GID
GROUP HEADER ID (IPv6 ADDRESS)
SEQ. NO
NODE ID (IPv6 ADDRESS)
NEXT-HOP-RELAY ID (IPv6 ADDRESS)
ToMR
HC GH
ACCUMULATED MEMBER LIST (OPTIONAL)
ADDITIONAL INFORMATION (OPTIONAL)
?
?
?
?

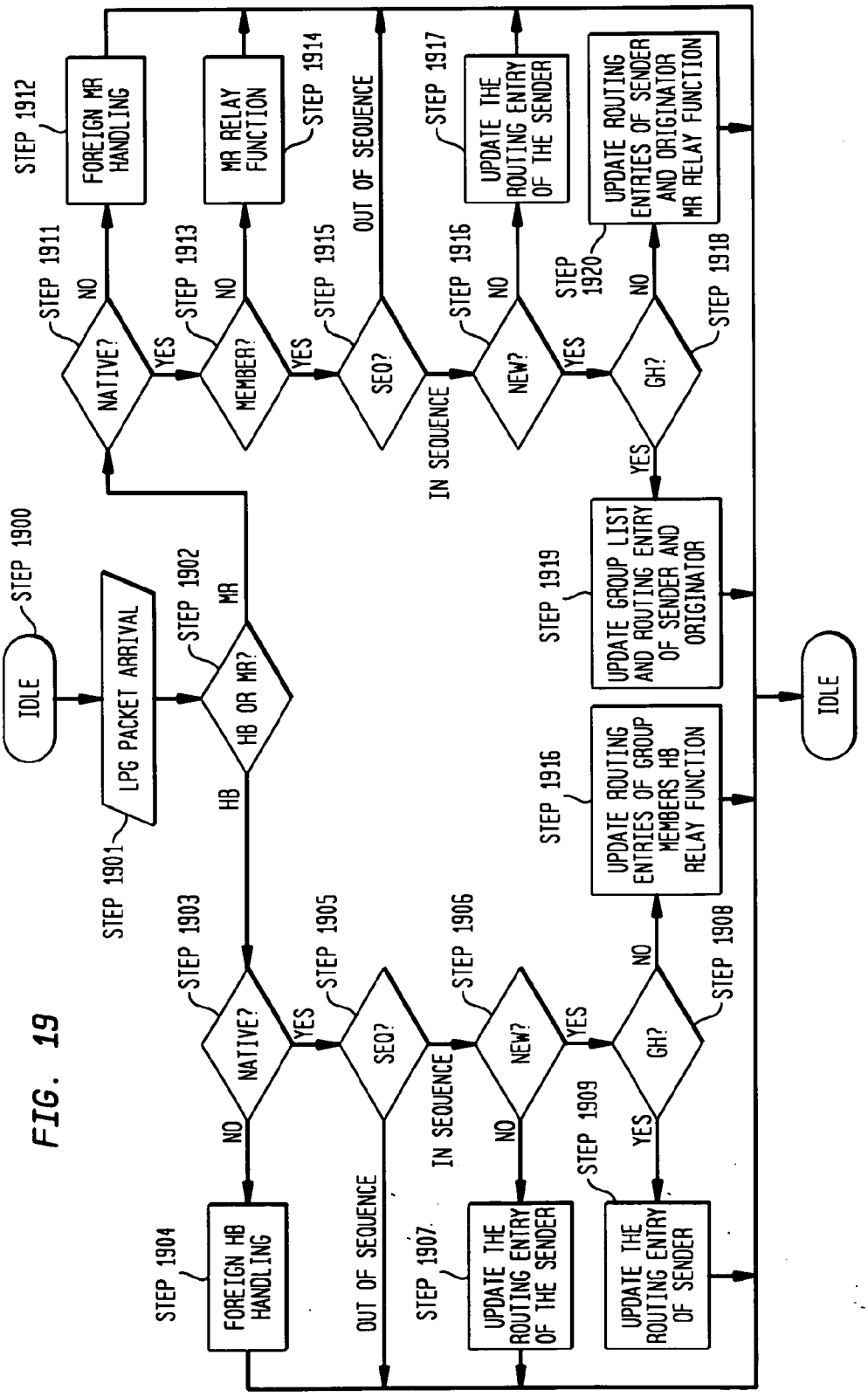
STEP 1900
IDLE
STEP 1901
LPG PACKET ARRIVAL
STEP 1902
HB OR MR?
HB
MR
STEP 1903
NATIVE?
NO
YES
STEP 1904
FOREIGN HB HANDLING
STEP 1905
SEQ?
OUT OF SEQUENCE
IN SEQUENCE
STEP 1906
NEW?
NO
YES
STEP 1907
UPDATE THE ROUTING ENTRY OF THE SENDER
STEP 1908
GH?
NO
YES
STEP 1909
UPDATE THE ROUTING ENTRY OF SENDER
STEP 1911
NATIVE?
NO
YES
STEP 1912
FOREIGN MR HANDLING
STEP 1913
MEMBER?
NO
YES
STEP 1914
MR RELAY FUNCTION
STEP 1915
SEQ?
OUT OF SEQUENCE
IN SEQUENCE
STEP 1916
NEW?
NO
YES
STEP 1917
UPDATE THE ROUTING ENTRY OF THE SENDER
STEP 1918
GH?
NO
YES
STEP 1919
UPDATE GROUP LIST AND ROUTING ENTRY OF SENDER AND ORIGINATOR
STEP 1920
UPDATE ROUTING ENTRIES OF SENDER AND ORIGINATOR MR RELAY FUNCTION
STEP 1916
UPDATE ROUTING ENTRIES OF GROUP MEMBERS HB RELAY FUNCTION
IDLE

FIG. 19

FIG. 20

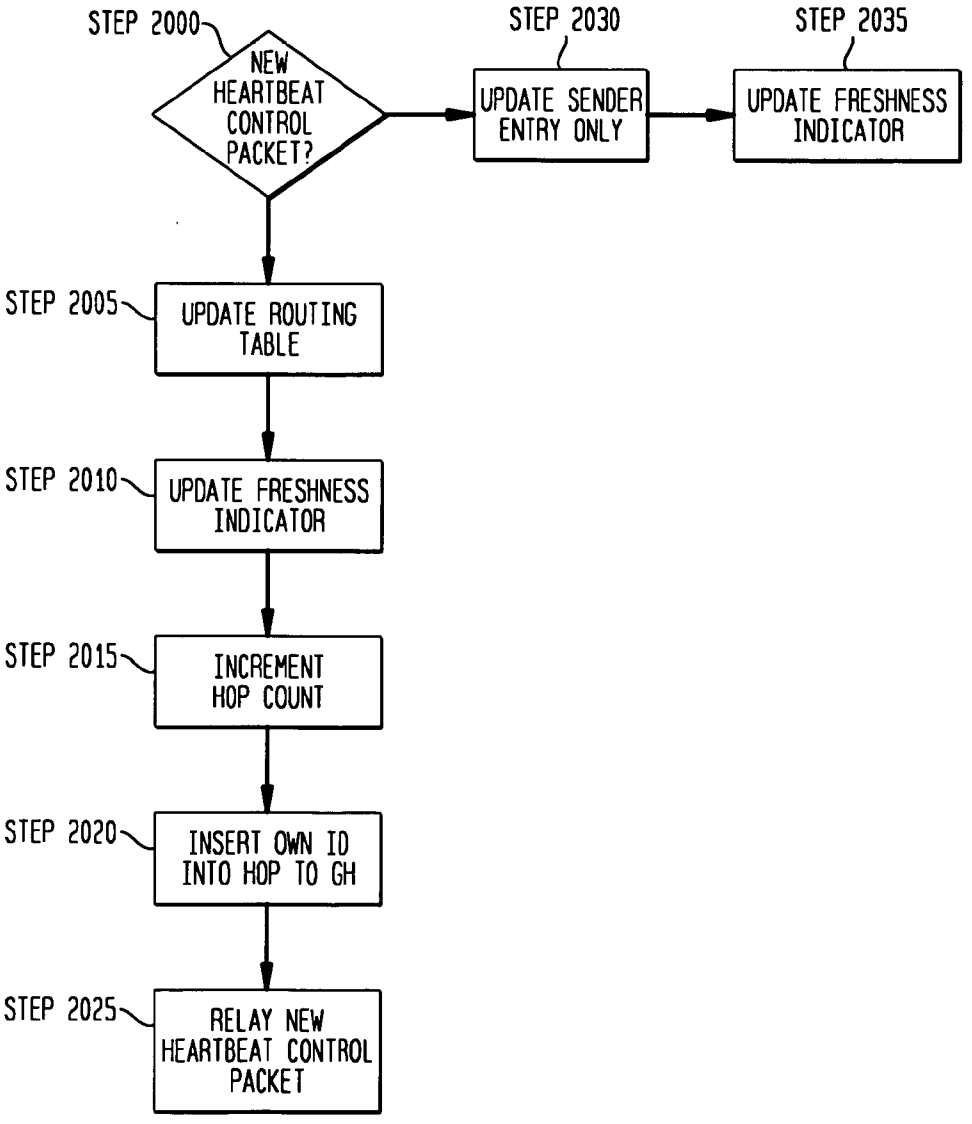
STEP 2000
NEW HEARTBEAT CONTROL PACKET?
STEP 2030
UPDATE SENDER ENTRY ONLY
STEP 2035
UPDATE FRESHNESS INDICATOR
STEP 2005
UPDATE ROUTING TABLE
STEP 2010
UPDATE FRESHNESS INDICATOR
STEP 2015
INCREMENT HOP COUNT
STEP 2020
INSERT OWN ID INTO HOP TO GH
STEP 2025
RELAY NEW HEARTBEAT CONTROL PACKET

FIG. 21

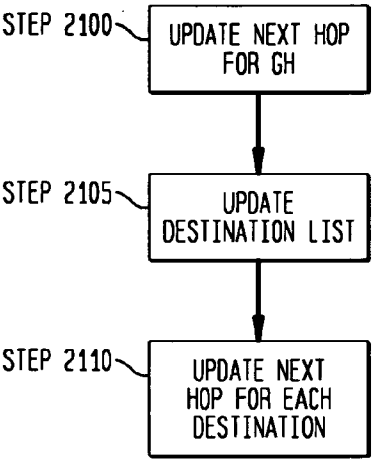
STEP 2100
UPDATE NEXT HOP FOR GH
STEP 2105
UPDATE DESTINATION LIST
STEP 2110
UPDATE NEXT HOP FOR EACH DESTINATION

FIG. 22

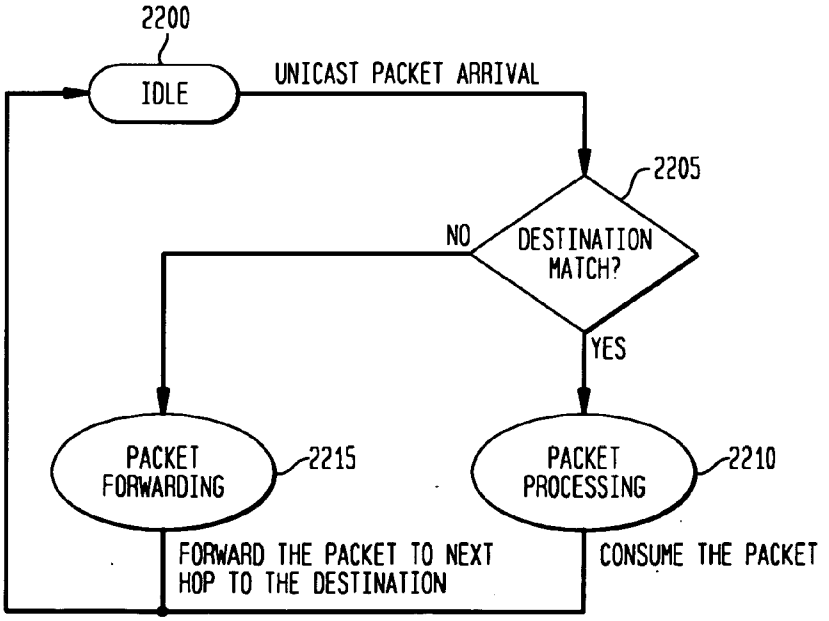
2200
IDLE
UNICAST PACKET ARRIVAL
2205
DESTINATION MATCH?
NO
YES
PACKET FORWARDING
2215
PACKET PROCESSING
2210
FORWARD THE PACKET TO NEXT HOP TO THE DESTINATION
CONSUME THE PACKET

2300

DESTINATION	NEXT HOP

FIG. 23

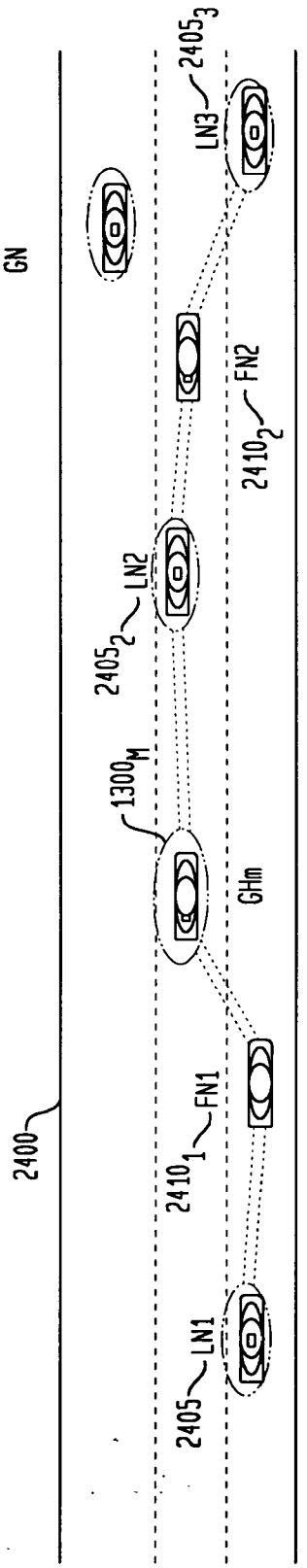

FIG. 24

FIG. 25

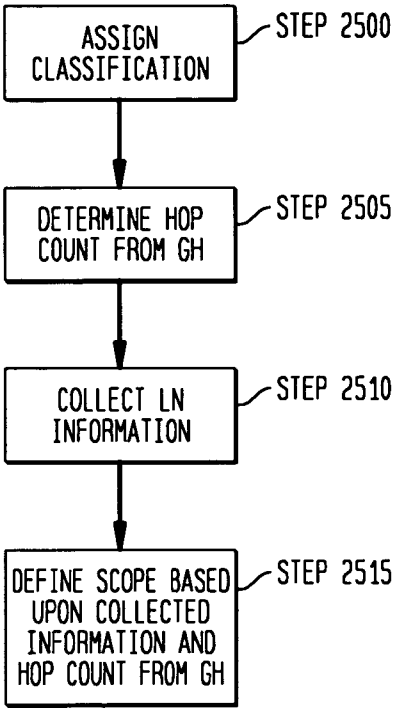
ASSIGN CLASSIFICATION
STEP 2500
DETERMINE HOP COUNT FROM GH
STEP 2505
COLLECT LN INFORMATION
STEP 2510
DEFINE SCOPE BASED UPON COLLECTED INFORMATION AND HOP COUNT FROM GH
STEP 2515

FIG. 26

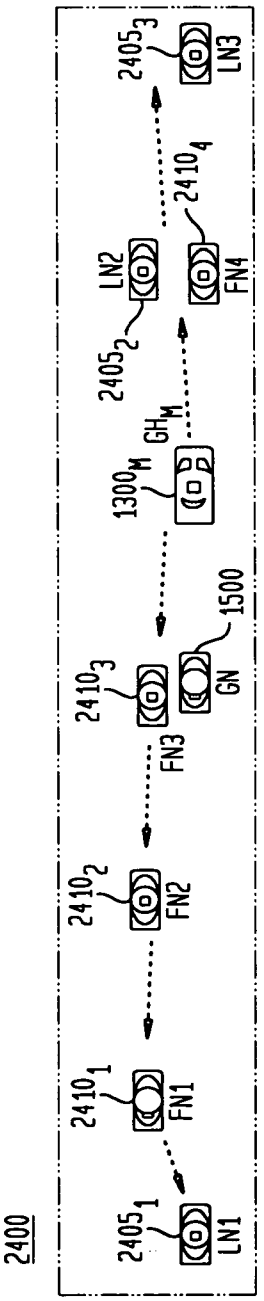
2400
2405 1
LN1
2410 1
FN1
2410 2
FN2
2410 3
FN3
1500
GN
1300 M
GH M
2405 2
LN2
2410 4
FN4
2405 3
LN3

FIG. 27

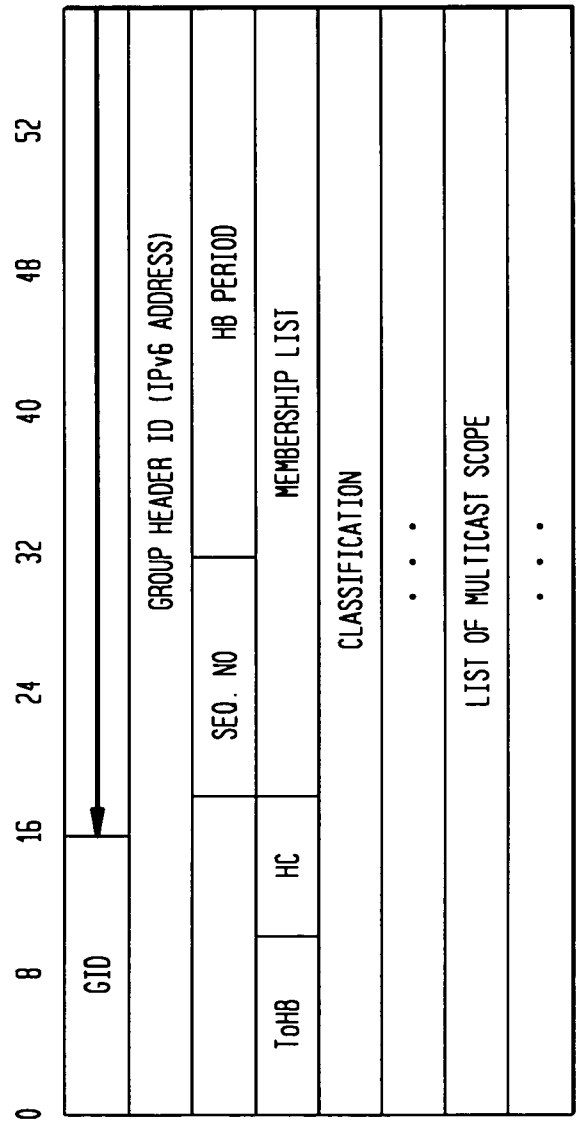
0
8
16
24
32
40
48
52
GID
GROUP HEADER ID (IPv6 ADDRESS)
ToHB
HC
SEQ. NO
HB PERIOD
MEMBERSHIP LIST
CLASSIFICATION
. . .
LIST OF MULTICAST SCOPE
. . .

FIG. 28

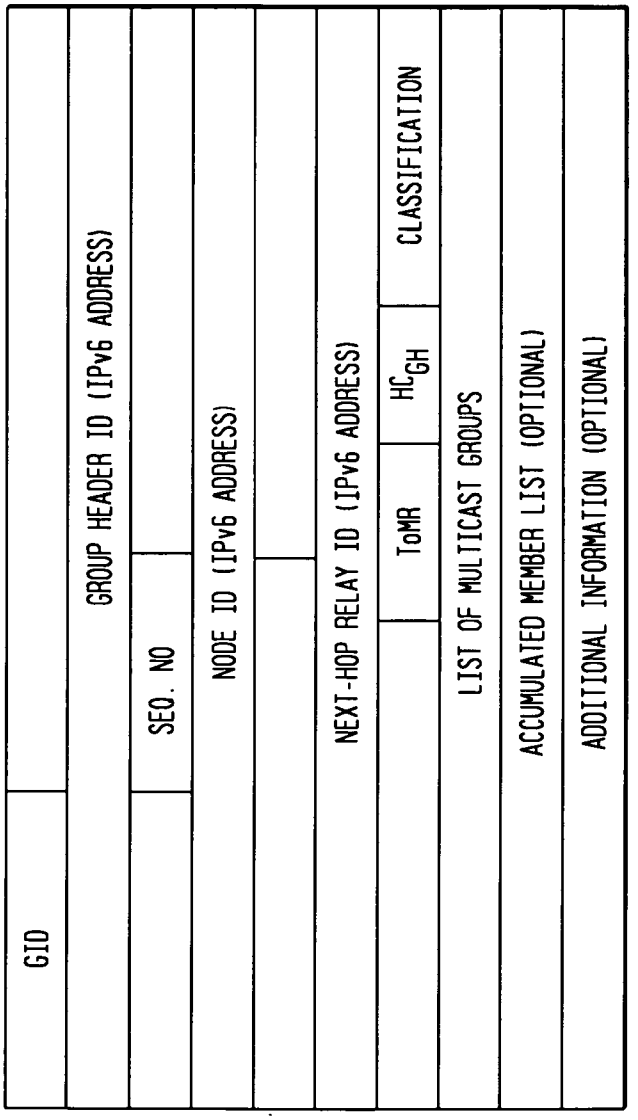
GID
GROUP HEADER ID (IPv6 ADDRESS)
SEQ. NO
NODE ID (IPv6 ADDRESS)
NEXT-HOP RELAY ID (IPv6 ADDRESS)
ToMR
HC_{GH}
CLASSIFICATION
LIST OF MULTICAST GROUPS
ACCUMULATED MEMBER LIST (OPTIONAL)
ADDITIONAL INFORMATION (OPTIONAL)

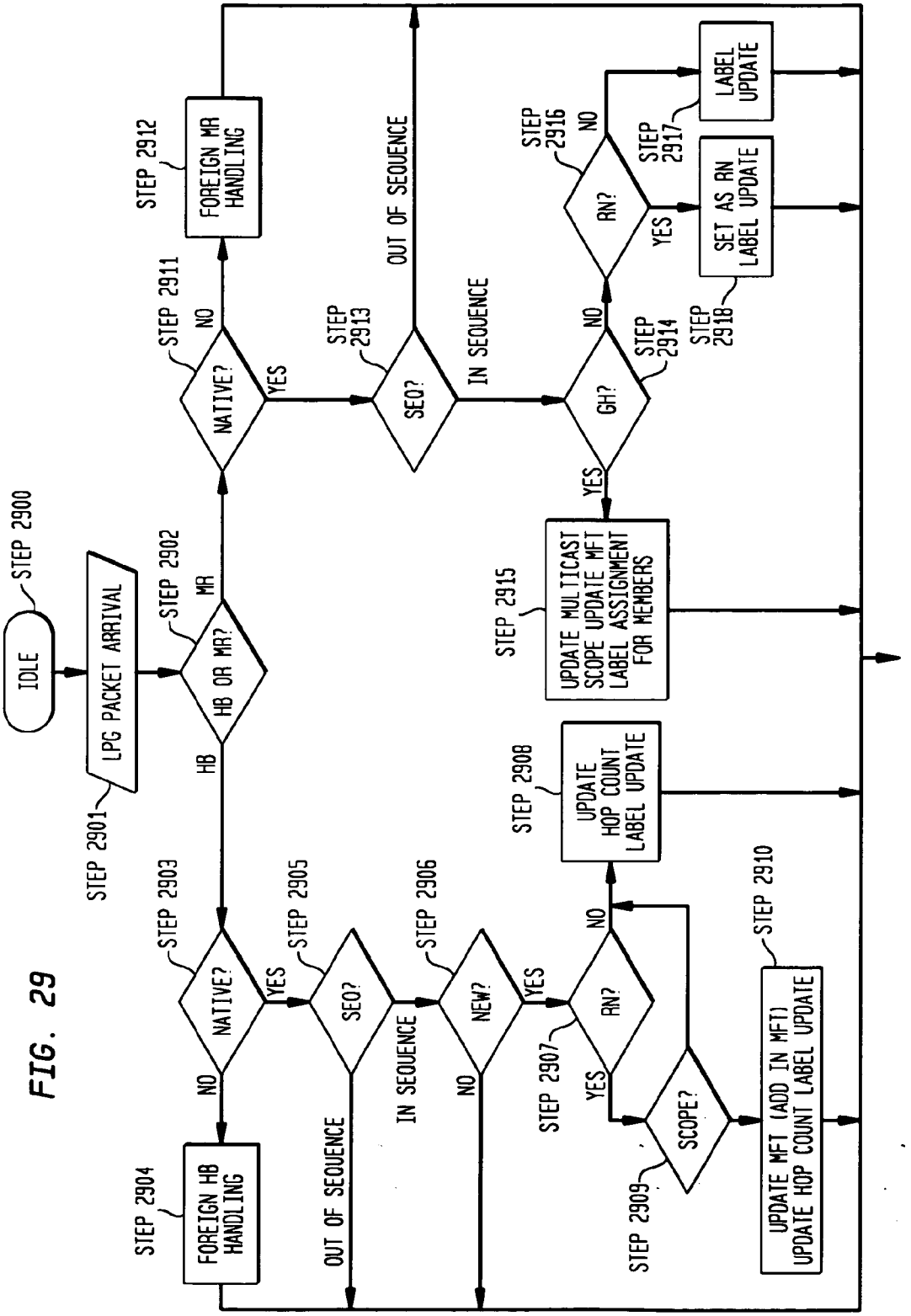
IDLE
STEP 2900
LPG PACKET ARRIVAL
STEP 2901
HB OR MR?
STEP 2902
HB
MR
NATIVE?
STEP 2903
NO
YES
FOREIGN HB HANDLING
STEP 2904
SEQ?
STEP 2905
OUT OF SEQUENCE
IN SEQUENCE
NEW?
STEP 2906
NO
YES
RN?
STEP 2907
NO
YES
UPDATE HOP COUNT LABEL UPDATE
STEP 2908
SCOPE?
STEP 2909
UPDATE MFT (ADD IN MFT)
UPDATE HOP COUNT LABEL UPDATE
STEP 2910
NATIVE?
STEP 2911
NO
YES
FOREIGN MR HANDLING
STEP 2912
SEQ?
STEP 2913
OUT OF SEQUENCE
IN SEQUENCE
GH?
STEP 2914
NO
YES
UPDATE MULTICAST SCOPE UPDATE MFT LABEL ASSIGNMENT FOR MEMBERS
STEP 2915
RN?
STEP 2916
NO
YES
LABEL UPDATE
STEP 2917
SET AS RN LABEL UPDATE
STEP 2918

FIG. 29

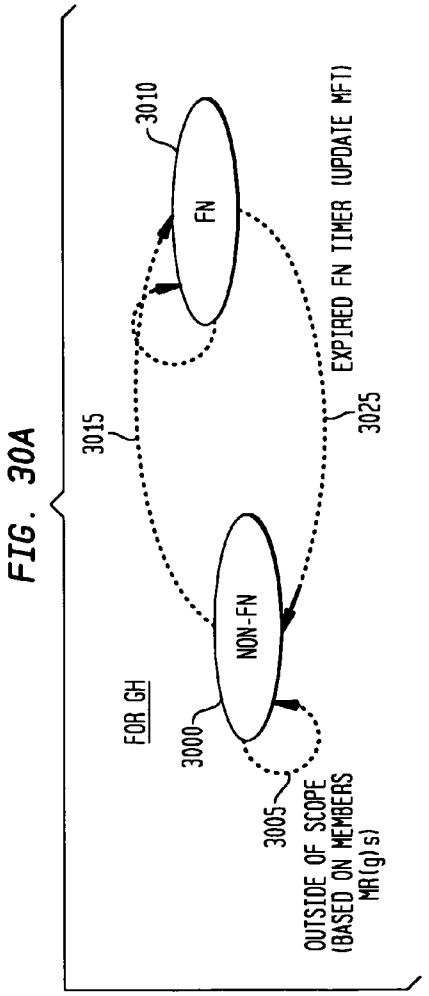
FIG. 30A
FOR GH
NON-FN
3000
FN
3010
3015
EXPIRED FN TIMER (UPDATE MFT)
3025
OUTSIDE OF SCOPE
(BASED ON MEMBERS
MR(g)s)
3005

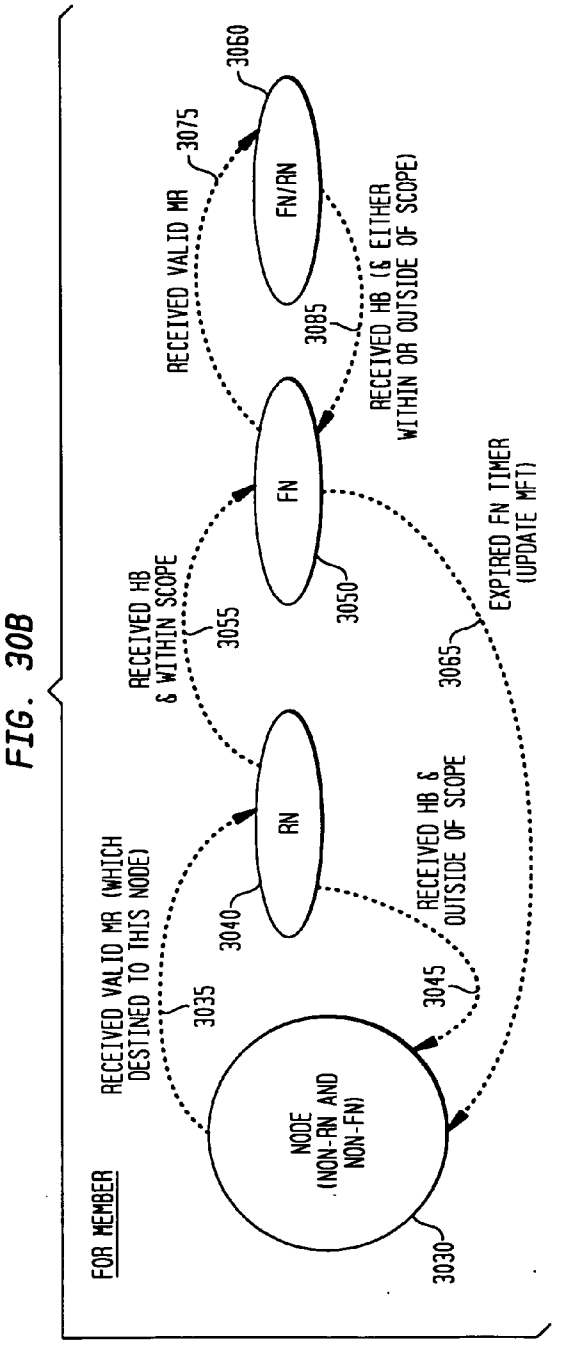
FIG. 30B
FOR MEMBER
NODE
(NON-RN AND
NON-FN)
3030
RECEIVED VALID MR (WHICH
DESTINED TO THIS NODE)
3035
RN
3040
RECEIVED HB &
OUTSIDE OF SCOPE
3045
RECEIVED HB
& WITHIN SCOPE
3055
FN
3050
EXPIRED FN TIMER
(UPDATE MFT)
3065
RECEIVED VALID MR
3075
FN/RN
3060
RECEIVED HB (& EITHER
WITHIN OR OUTSIDE OF SCOPE)
3085

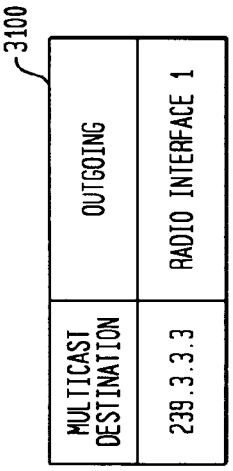
3100
MULTICAST DESTINATION
OUTGOING
239.3.3.3
RADIO INTERFACE 1

FIG. 31

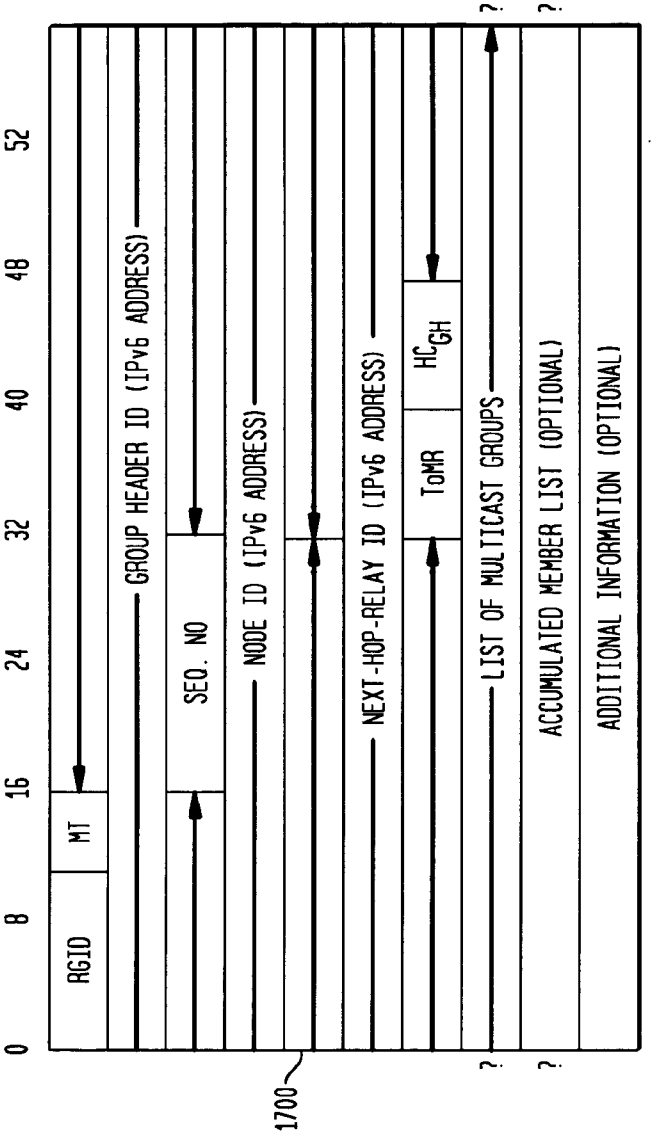
0
8
16
24
32
40
48
52
RGID
MT
GROUP HEADER ID (IPv6 ADDRESS)
SEQ. NO
NODE ID (IPv6 ADDRESS)
NEXT-HOP-RELAY ID (IPv6 ADDRESS)
ToMR
HC GH
LIST OF MULTICAST GROUPS
ACCUMULATED MEMBER LIST (OPTIONAL)
ADDITIONAL INFORMATION (OPTIONAL)
1700

FIG. 32

FIG. 33

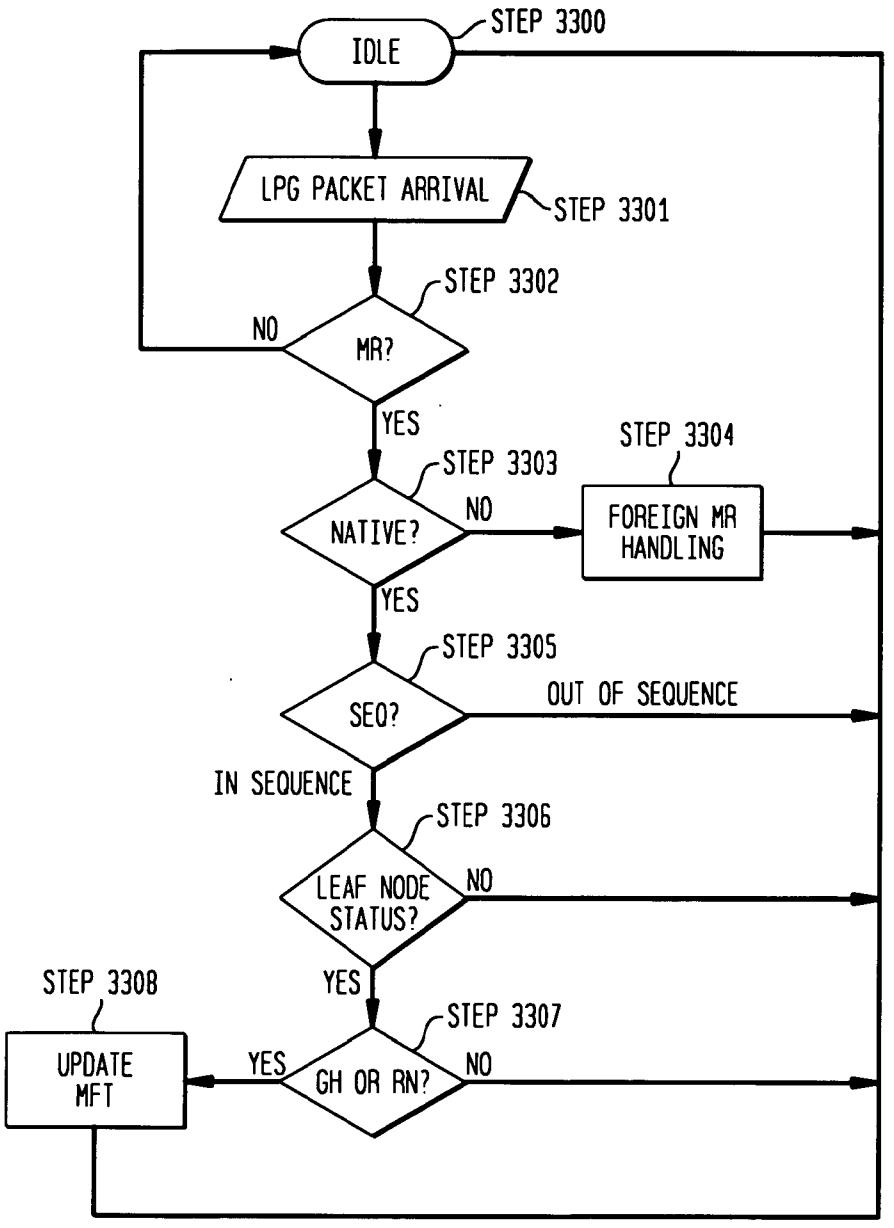
STEP 3300
IDLE
LPG PACKET ARRIVAL
STEP 3301
STEP 3302
NO
MR?
YES
STEP 3304
STEP 3303
NATIVE?
NO
FOREIGN MR HANDLING
YES
STEP 3305
SEQ?
OUT OF SEQUENCE
IN SEQUENCE
STEP 3306
LEAF NODE STATUS?
NO
YES
STEP 3308
STEP 3307
UPDATE MFT
YES
GH OR RN?
NO

FIG. 34

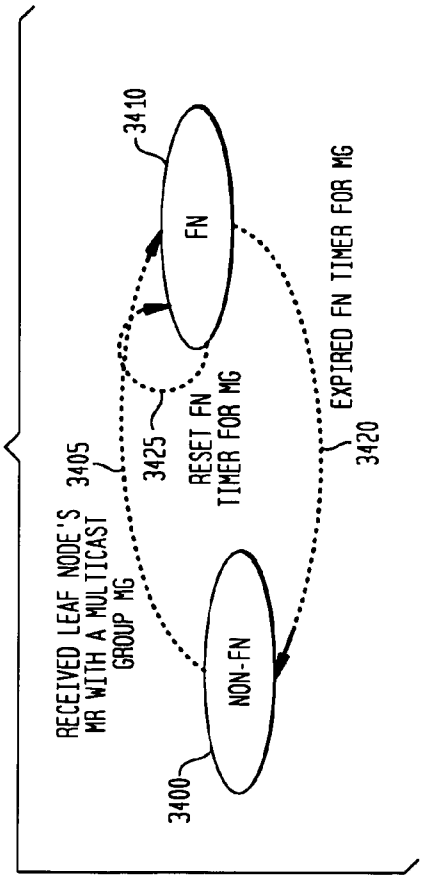
RECEIVED LEAF NODE'S MR WITH A MULTICAST GROUP MG
3405
3425
RESET FN TIMER FOR MG
EXPIRED FN TIMER FOR MG
3420
3410
FN
NON-FN
3400

FIG. 35

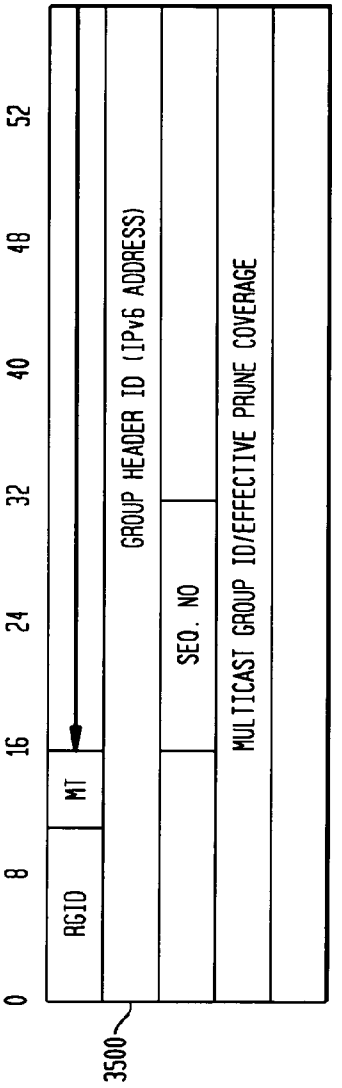
0
8
16
24
32
40
48
52
RGID
MT
GROUP HEADER ID (IPv6 ADDRESS)
SEQ. NO
MULTICAST GROUP ID/EFFECTIVE PRUNE COVERAGE
3500

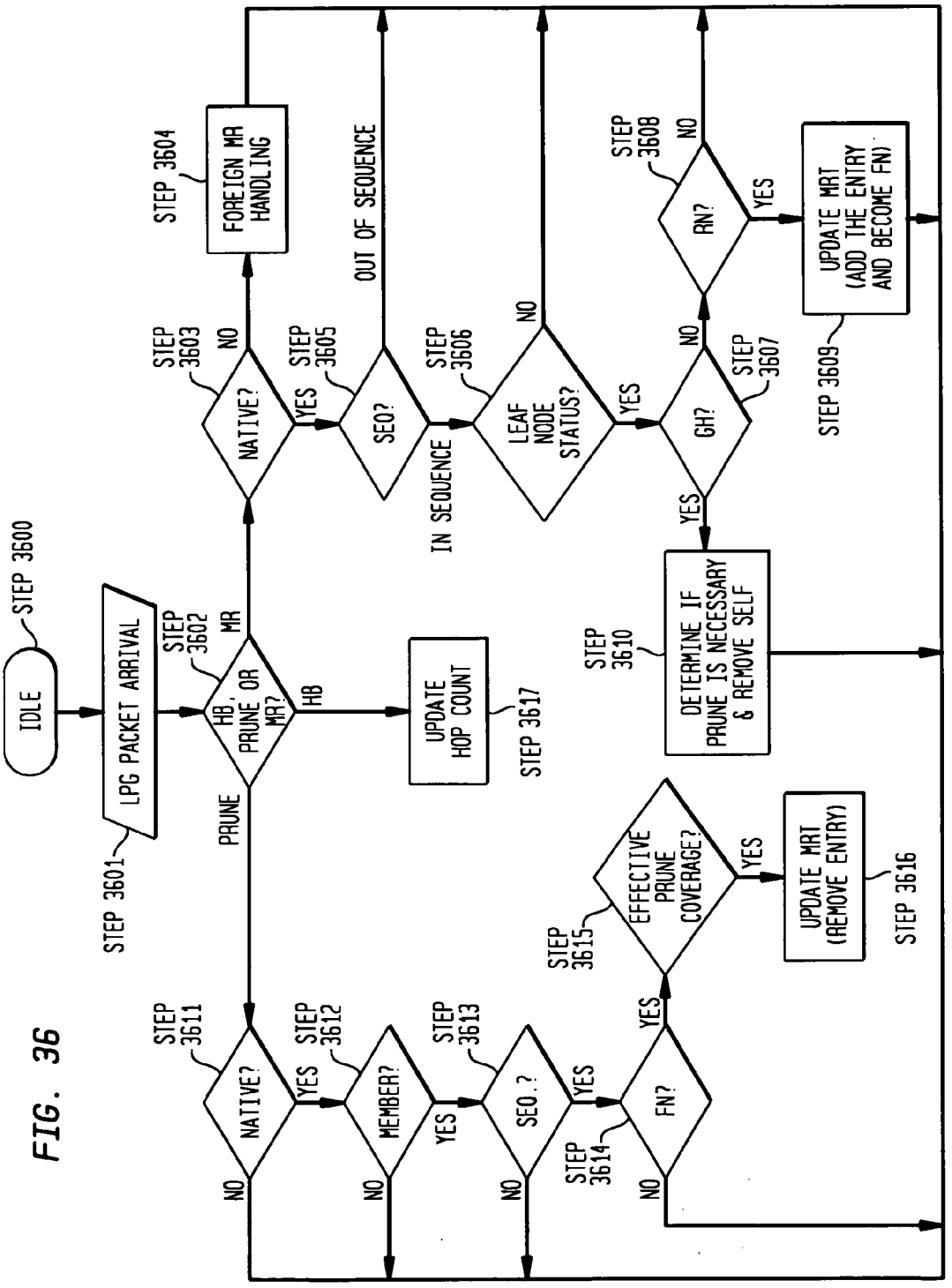
IDLE
STEP 3600
LPG PACKET ARRIVAL
STEP 3601
STEP 3602
HB, PRUNE OR MR?
HB
PRUNE
MR
UPDATE HOP COUNT
STEP 3617
STEP 3603
NATIVE?
NO
YES
STEP 3604
FOREIGN MR HANDLING
STEP 3605
SEQ?
OUT OF SEQUENCE
IN SEQUENCE
STEP 3606
LEAF NODE STATUS?
NO
YES
STEP 3607
GH?
NO
YES
STEP 3608
RN?
NO
YES
STEP 3609
UPDATE MRT (ADD THE ENTRY AND BECOME FN)
STEP 3610
DETERMINE IF PRUNE IS NECESSARY & REMOVE SELF
STEP 3611
NATIVE?
NO
YES
STEP 3612
MEMBER?
NO
YES
STEP 3613
SEQ.?
NO
YES
STEP 3614
FN?
NO
YES
STEP 3615
EFFECTIVE PRUNE COVERAGE?
YES
UPDATE MRT (REMOVE ENTRY)
STEP 3616

FIG. 36

FIG. 37A

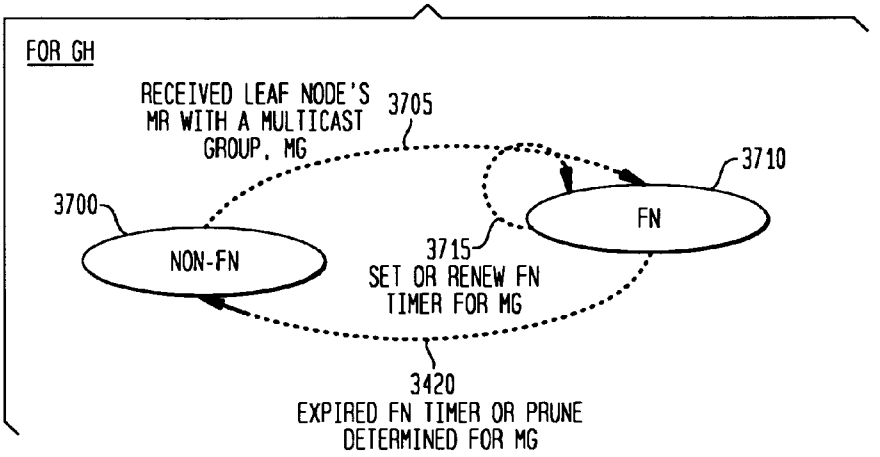

FIG. 37B

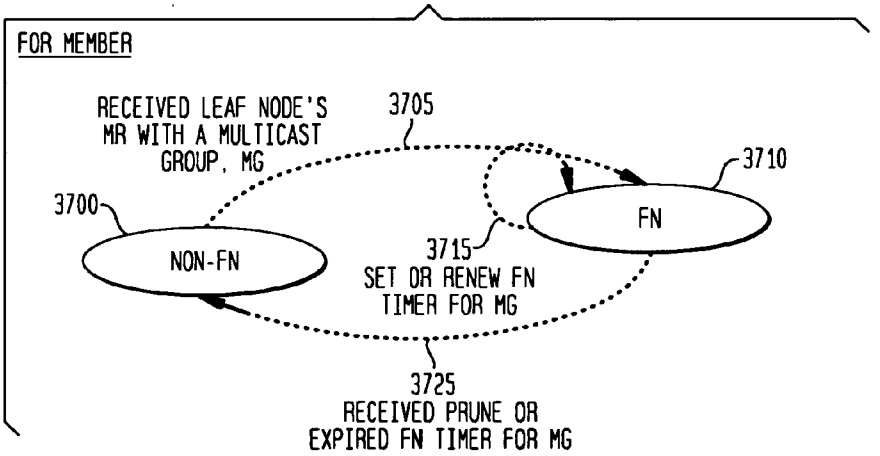

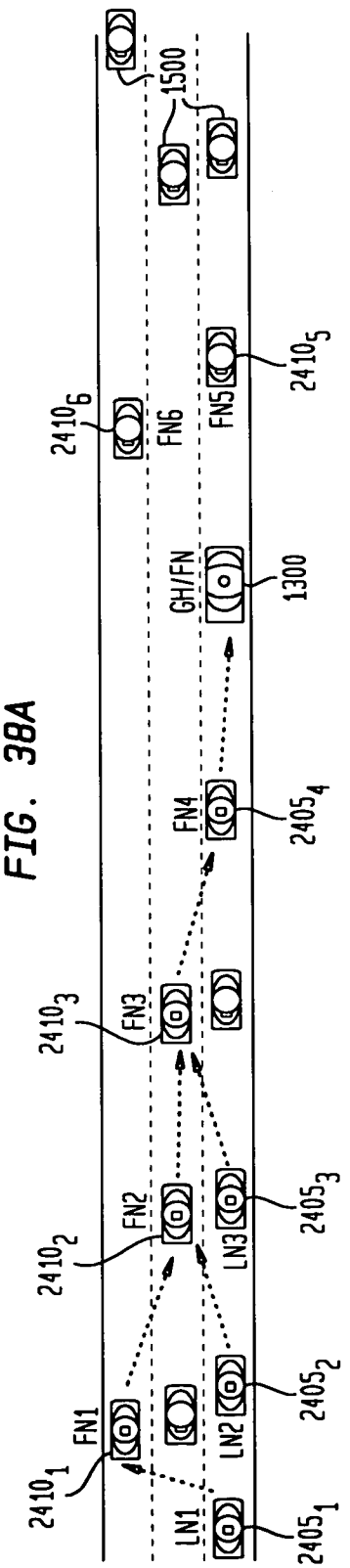

FIG. 38A

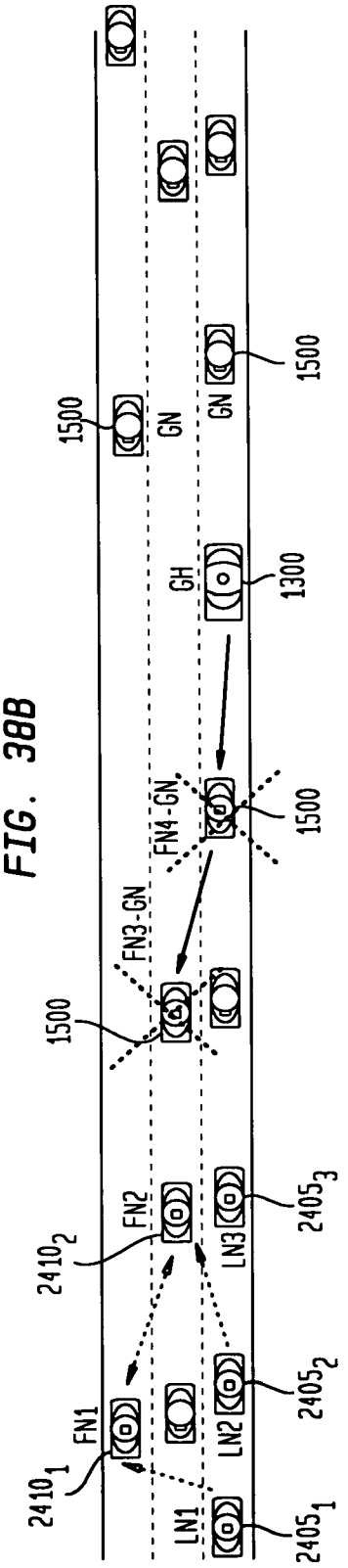

FIG. 38B

FIG. 39

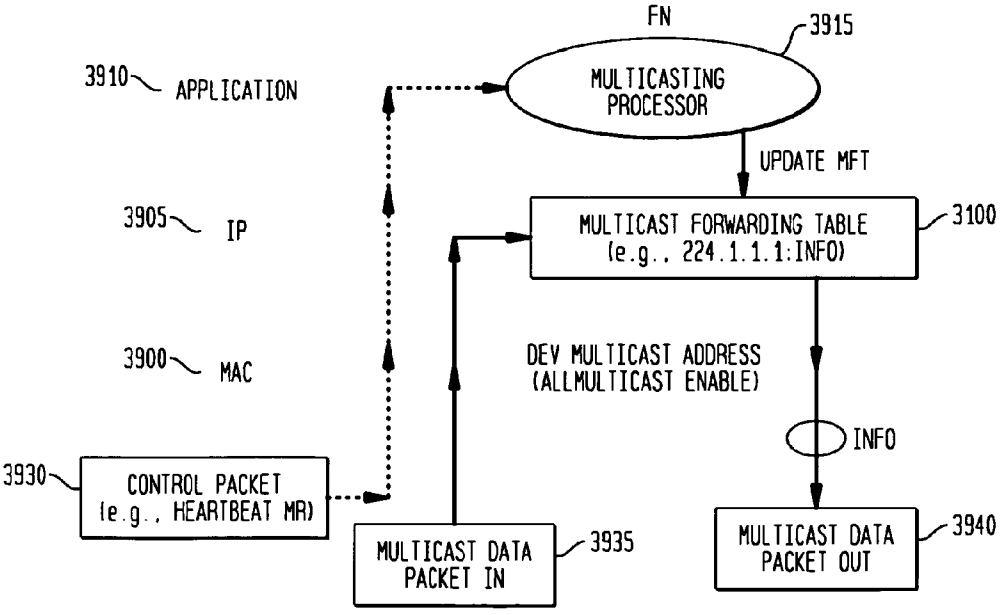
FN
3915
MULTICASTING PROCESSOR
3910
APPLICATION
UPDATE MFT
3905
IP
MULTICAST FORWARDING TABLE (e.g., 224.1.1.1:INFO)
3100
3900
MAC
DEV MULTICAST ADDRESS (ALLMULTICAST ENABLE)
INFO
3930
CONTROL PACKET (e.g., HEARTBEAT MR)
MULTICAST DATA PACKET IN
3935
MULTICAST DATA PACKET OUT
3940

FIG. 40

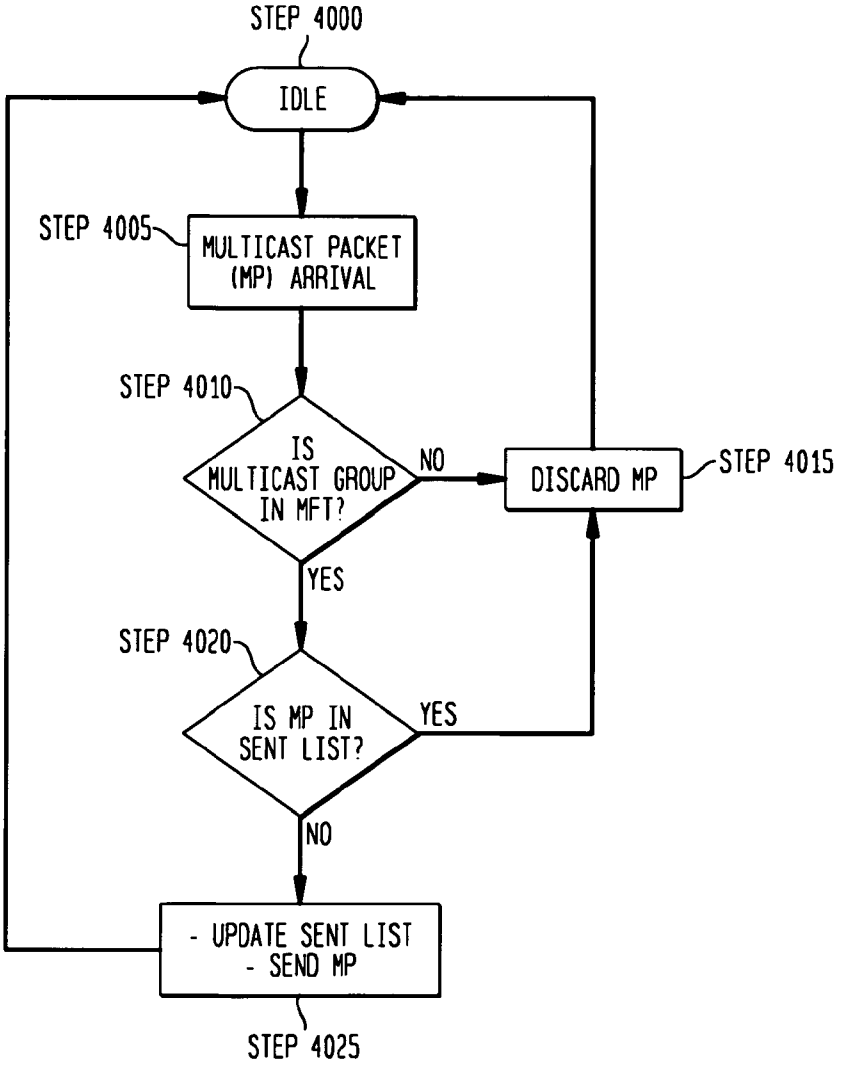
STEP 4000
IDLE
STEP 4005
MULTICAST PACKET (MP) ARRIVAL
STEP 4010
IS MULTICAST GROUP IN MFT?
NO
DISCARD MP
STEP 4015
YES
STEP 4020
IS MP IN SENT LIST?
YES
NO
- UPDATE SENT LIST
- SEND MP
STEP 4025

FIG. 41

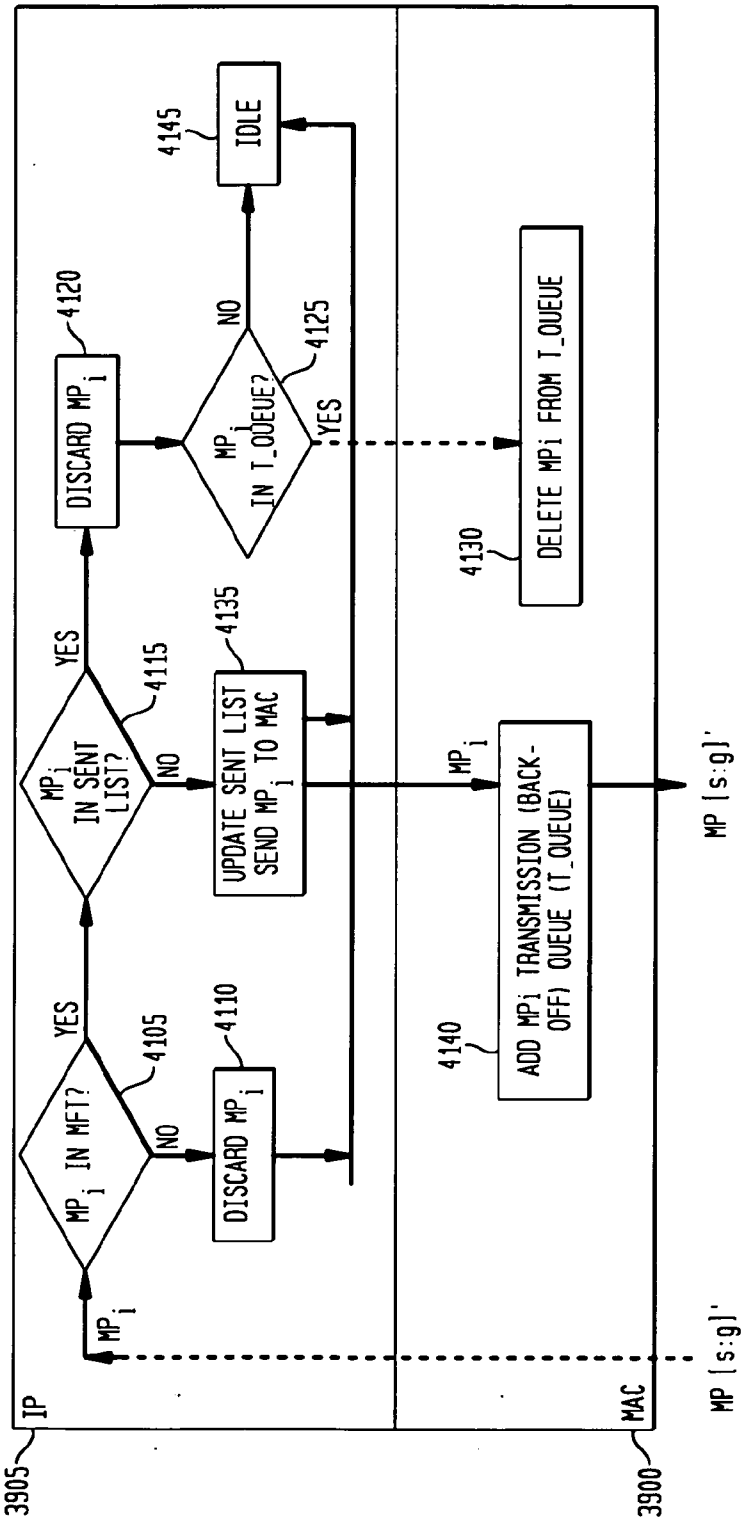
IP
MAC
3905
3900
MP_i
MP [s:g]'
MP [s:g]'
4105
MP_i IN MFT?
YES
NO
4110
DISCARD MP_i
4115
MP_i IN SENT LIST?
YES
NO
4120
DISCARD MP_i
4125
MP_i IN T_QUEUE?
YES
NO
4130
DELETE MPi FROM T_QUEUE
4135
UPDATE SENT LIST SEND MP_i TO MAC
4140
ADD MPi TRANSMISSION (BACK-OFF) QUEUE (T_QUEUE)
MP_i
4145
IDLE

FIG. 42

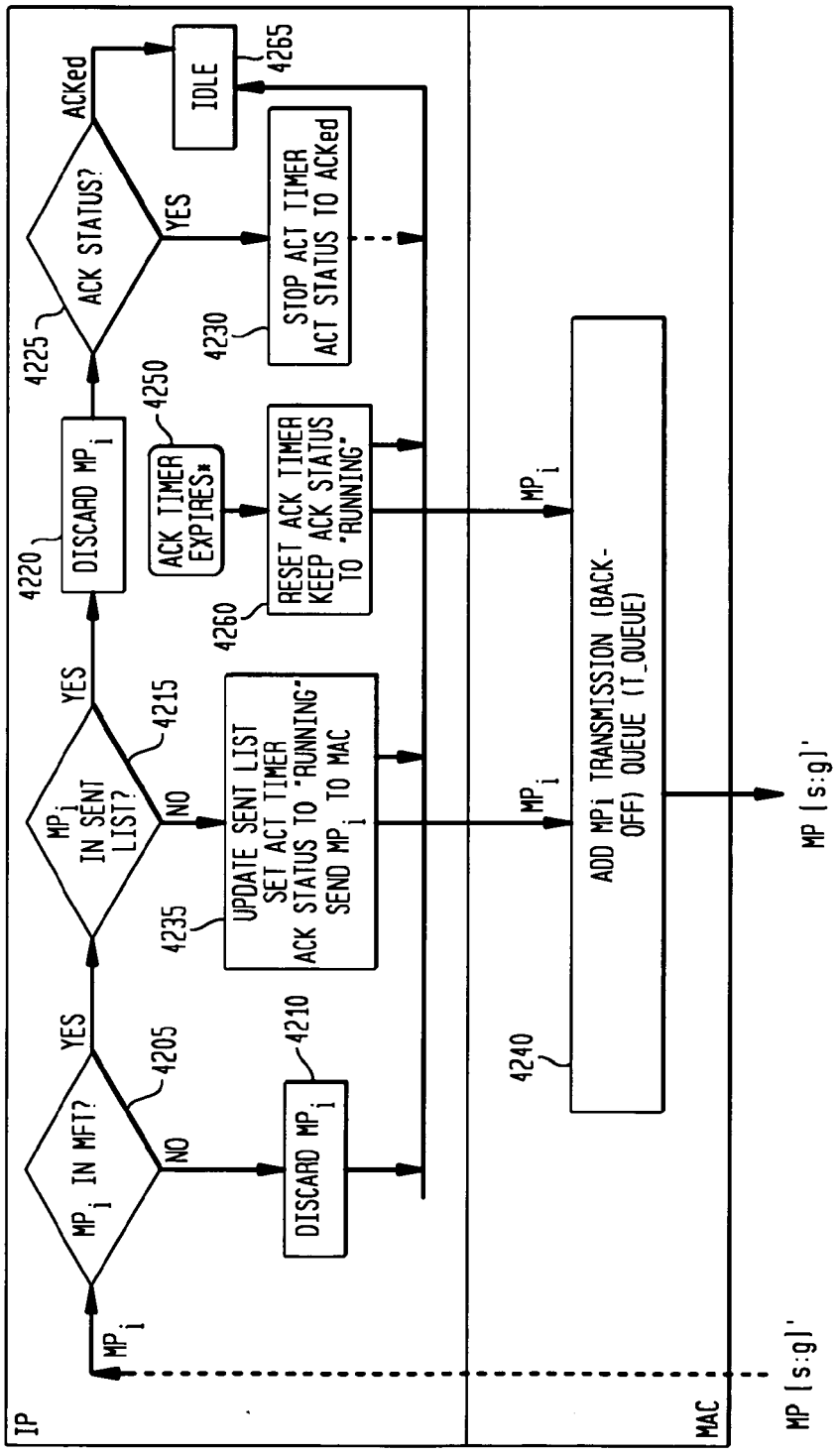
IP
MAC
MP_i
MP_i IN MFT?
YES
NO
4205
DISCARD MP_i
4210
MP_i IN SENT LIST?
YES
NO
4215
UPDATE SENT LIST
SET ACT TIMER
ACK STATUS TO "RUNNING"
SEND MP_i TO MAC
4235
DISCARD MP_i
4220
ACK STATUS?
ACKed
YES
4225
IDLE
4265
ACK TIMER EXPIRES*
4250
RESET ACK TIMER
KEEP ACK STATUS
TO "RUNNING"
4260
STOP ACT TIMER
ACT STATUS TO ACKed
4230
MP_i
ADD MPi TRANSMISSION (BACK-OFF) QUEUE (T_QUEUE)
4240
MP_i
MP [s:g]'
MP [s:g]'

FIG. 43

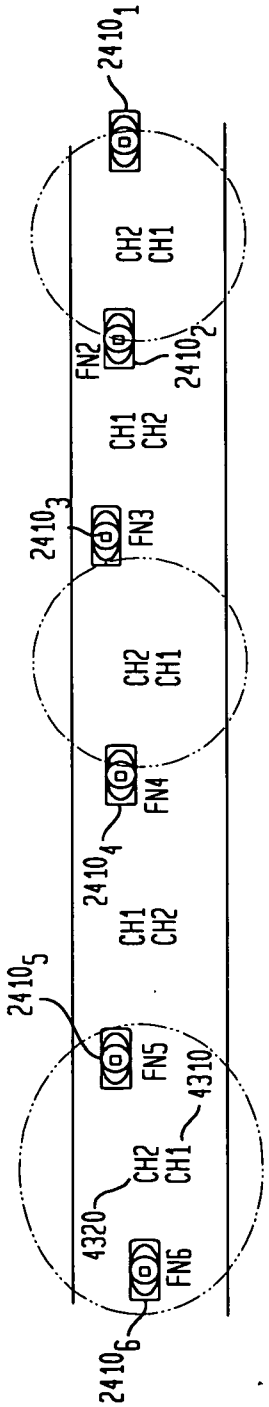
2410 1
CH2
CH1
FN2
2410 2
CH1
CH2
2410 3
FN3
CH2
CH1
FN4
2410 4
CH1
CH2
2410 5
FN5
4310
CH2
CH1
4320
FN6
2410 6

FIG. 44

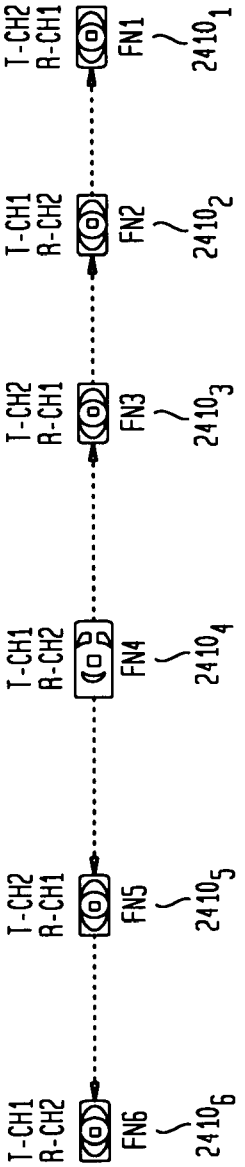
T-CH2
R-CH1
FN1
2410 1
T-CH1
R-CH2
FN2
2410 2
T-CH2
R-CH1
FN3
2410 3
T-CH1
R-CH2
FN4
2410 4
T-CH2
R-CH1
FN5
2410 5
T-CH1
R-CH2
FN6
2410 6

FIG. 45

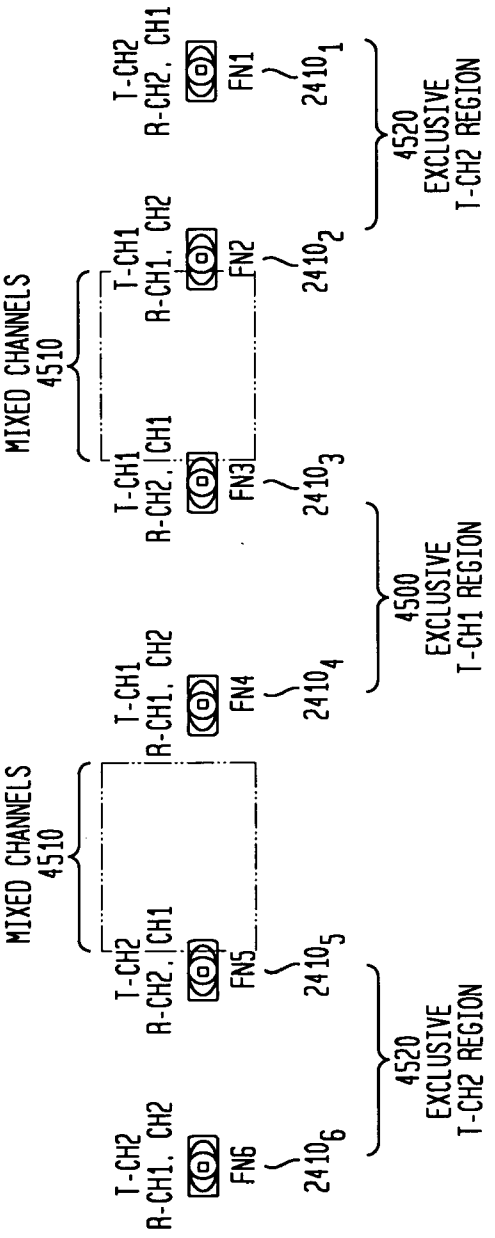
MIXED CHANNELS
4510
T-CH2
R-CH1, CH2
FN6
2410 6
T-CH2
R-CH2, CH1
FN5
2410 5
4520
EXCLUSIVE
T-CH2 REGION
T-CH1
R-CH1, CH2
FN4
2410 4
T-CH1
R-CH2, CH1
FN3
2410 3
4500
EXCLUSIVE
T-CH1 REGION
MIXED CHANNELS
4510
T-CH1
R-CH1, CH2
FN2
2410 2
T-CH2
R-CH2, CH1
FN1
2410 1
4520
EXCLUSIVE
T-CH2 REGION

FIG. 46

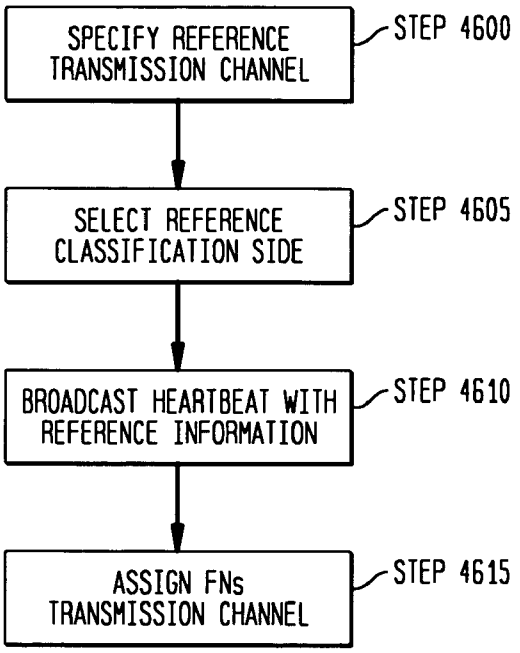
SPECIFY REFERENCE TRANSMISSION CHANNEL
STEP 4600
SELECT REFERENCE CLASSIFICATION SIDE
STEP 4605
BROADCAST HEARTBEAT WITH REFERENCE INFORMATION
STEP 4610
ASSIGN FNs TRANSMISSION CHANNEL
STEP 4615

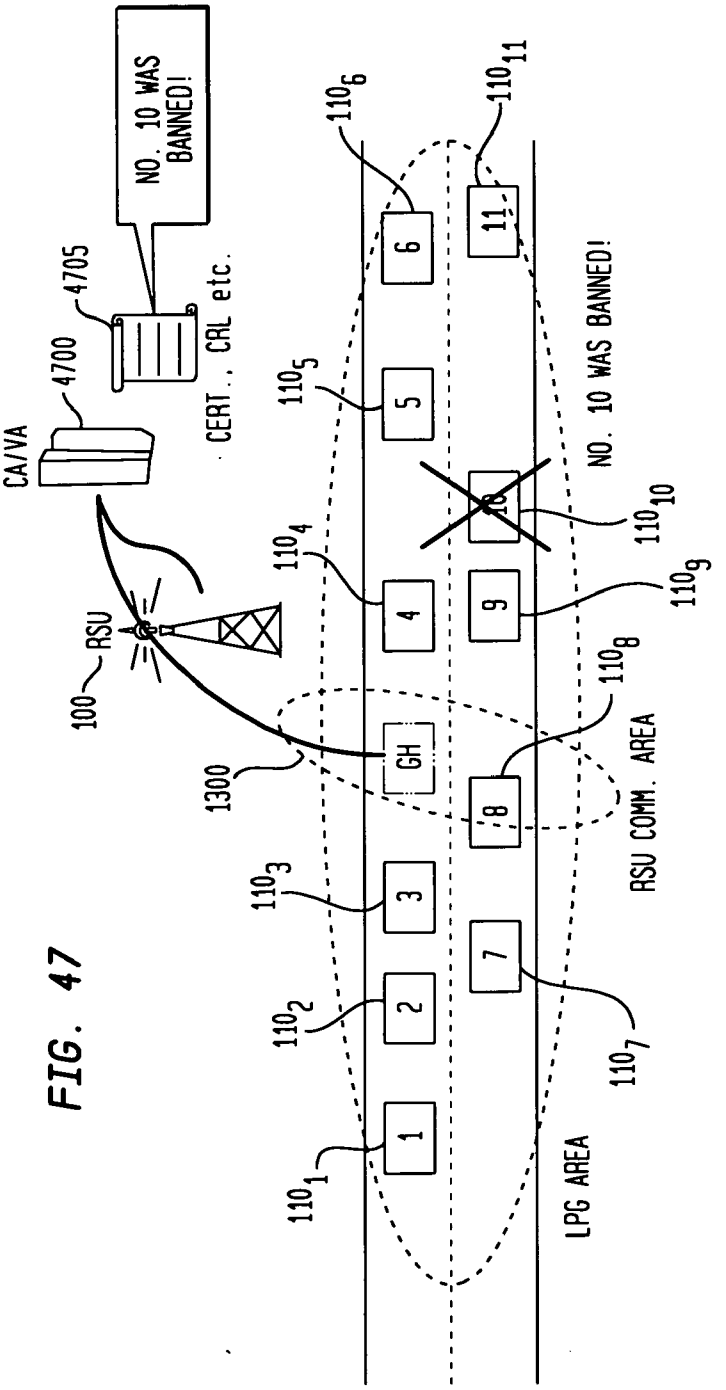
NO. 10 WAS BANNED!
4705
4700
CA/VA
CERT., CRL etc.
RSU
100
1300
GH
1
2
3
4
5
6
7
8
9
10
11
110_1
110_2
110_3
110_4
110_5
110_6
110_7
110_8
110_9
110_{10}
110_{11}
NO. 10 WAS BANNED!
RSU COMM. AREA
LPG AREA

FIG. 47

FIG. 48

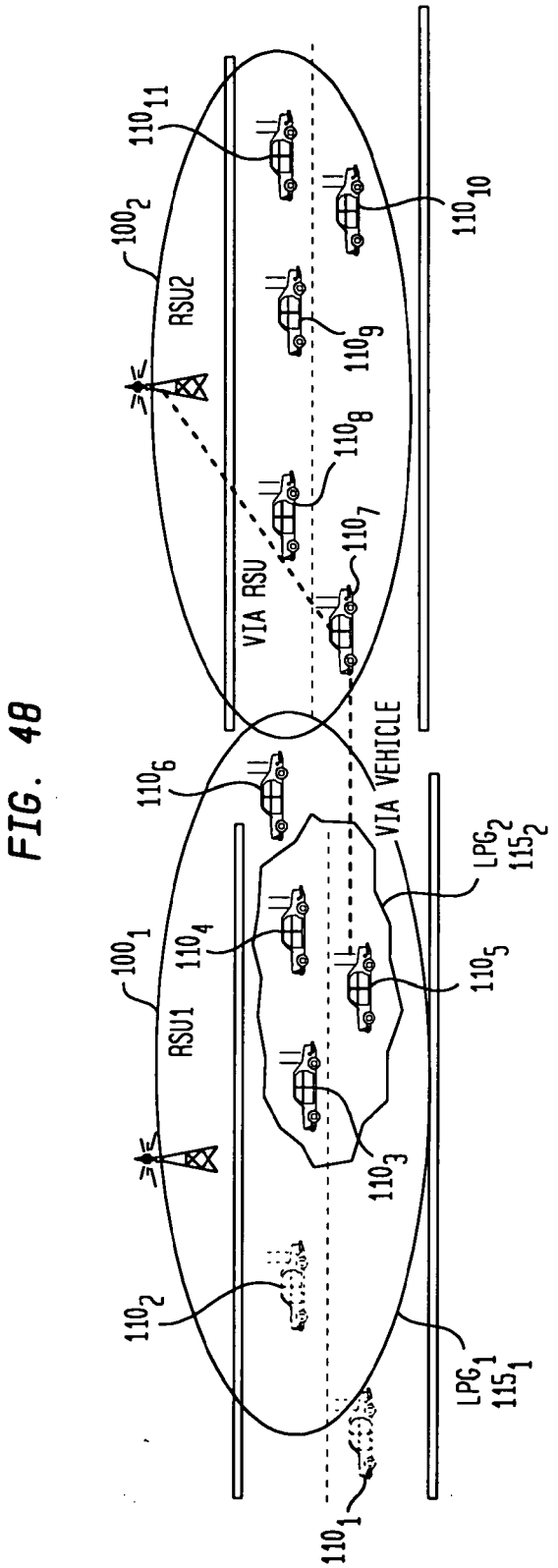
100_2
RSU2
110_{11}
110_{10}
110_9
110_8
110_7
VIA RSU
VIA VEHICLE
110_6
LPG_2 115_2
100_1
RSU1
110_4
110_5
110_3
110_2
LPG_1 115_1
110_1

FIG. 49

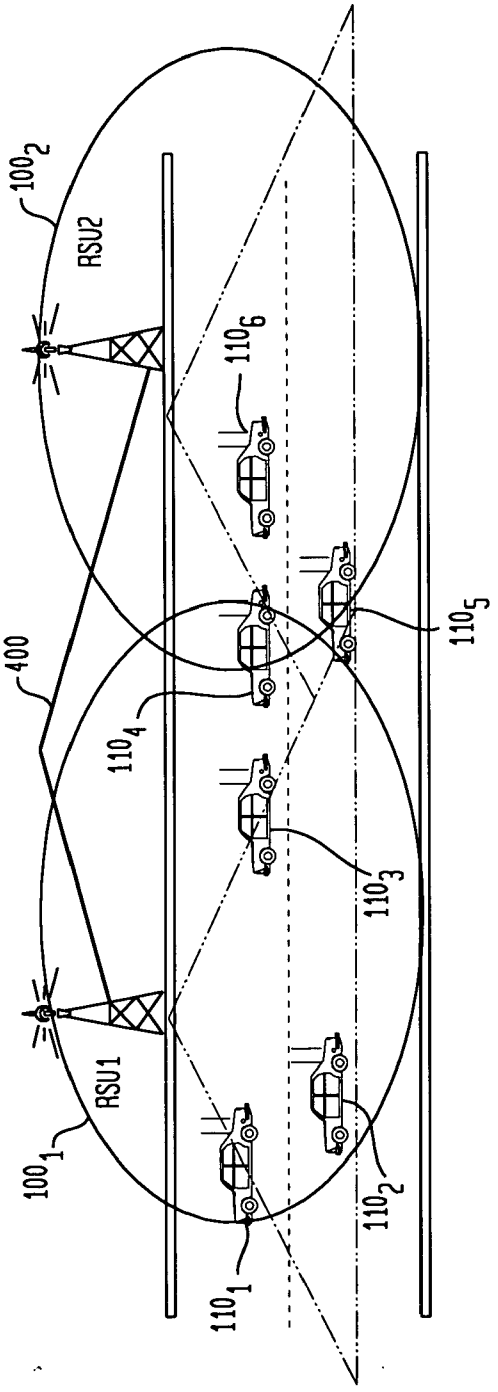

FIG. 50

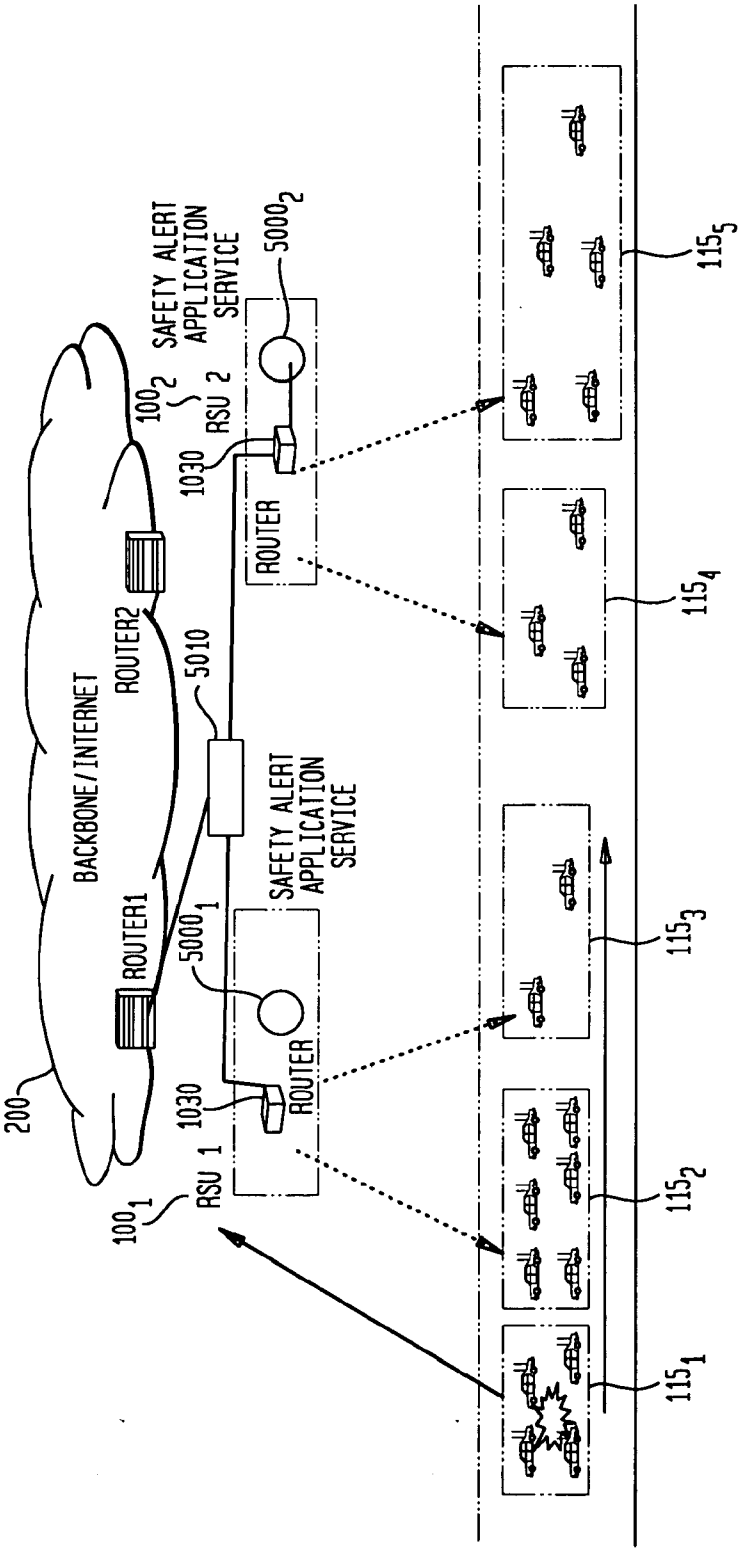
BACKBONE/INTERNET
200
ROUTER1
ROUTER2
5010
SAFETY ALERT APPLICATION SERVICE
5000_1
5000_2
ROUTER
1030
RSU 1
100_1
100_2
RSU 2
115_1
115_2
115_3
115_4
115_5

FIG. 51

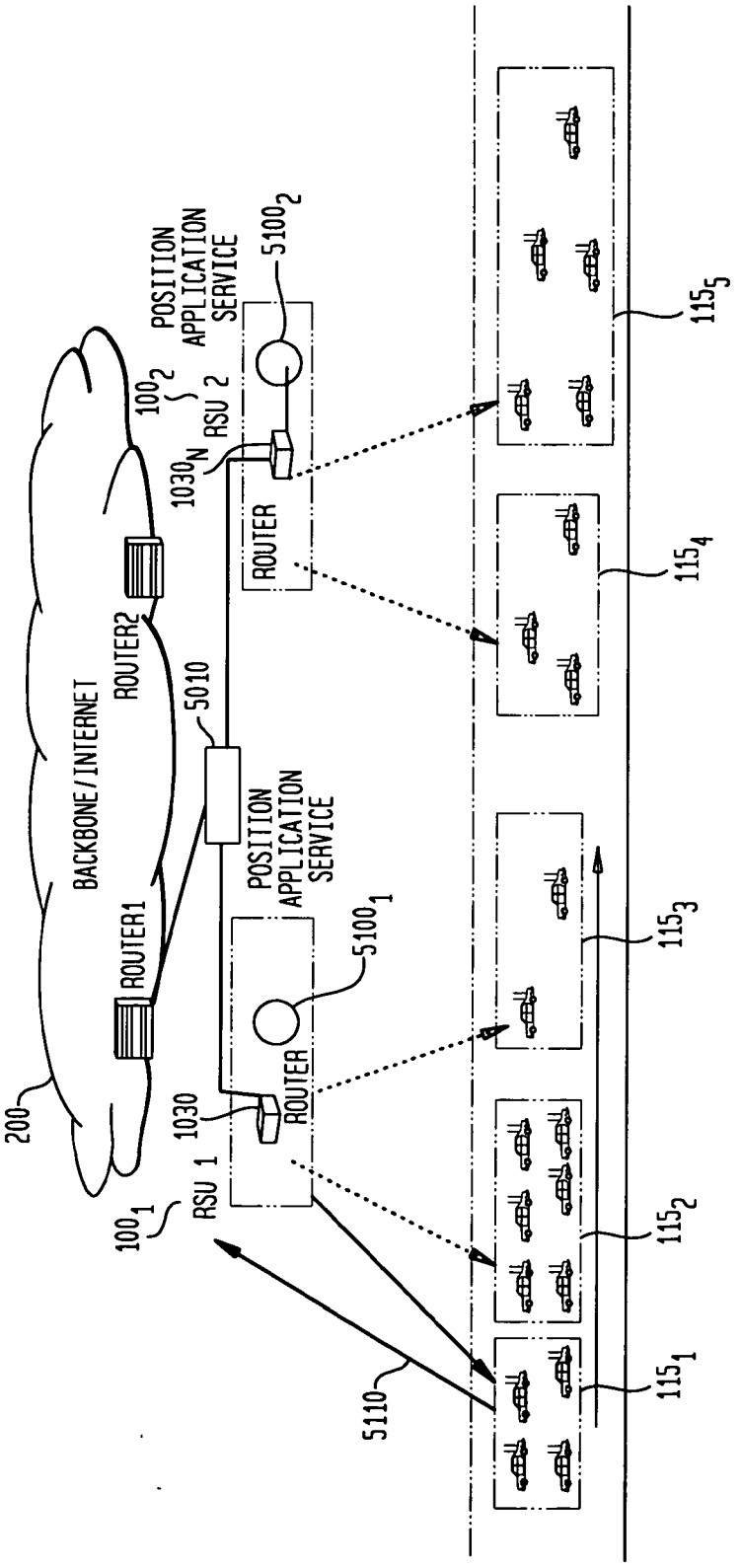
BACKBONE/INTERNET
200
ROUTER1
ROUTER2
5010
POSITION APPLICATION SERVICE
POSITION APPLICATION SERVICE
5100_1
5100_2
ROUTER
ROUTER
1030
1030_N
RSU 1
RSU 2
100_1
100_2
5110
115_1
115_2
115_3
115_4
115_5

FIG. 52

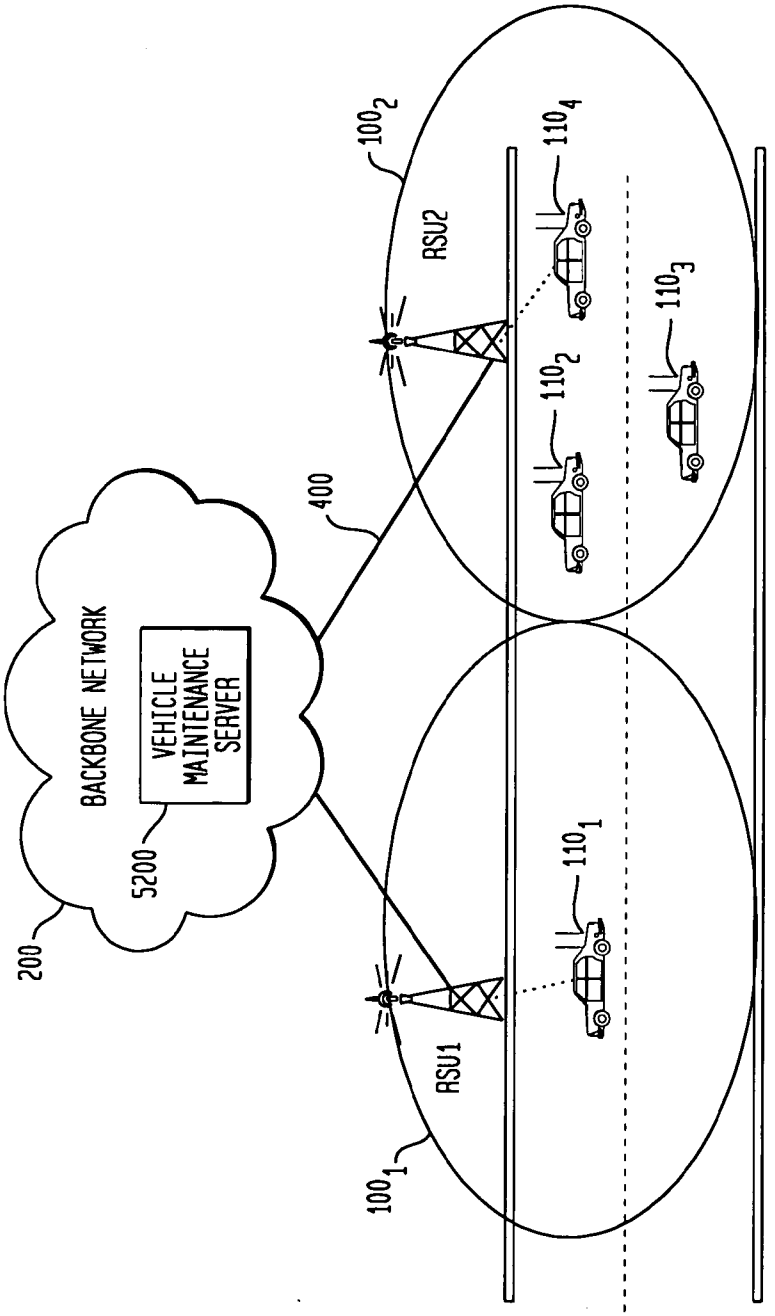
BACKBONE NETWORK
VEHICLE MAINTENANCE SERVER
5200
200
400
RSU1
RSU2
100_1
100_2
110_1
110_2
110_3
110_4

FIG. 53

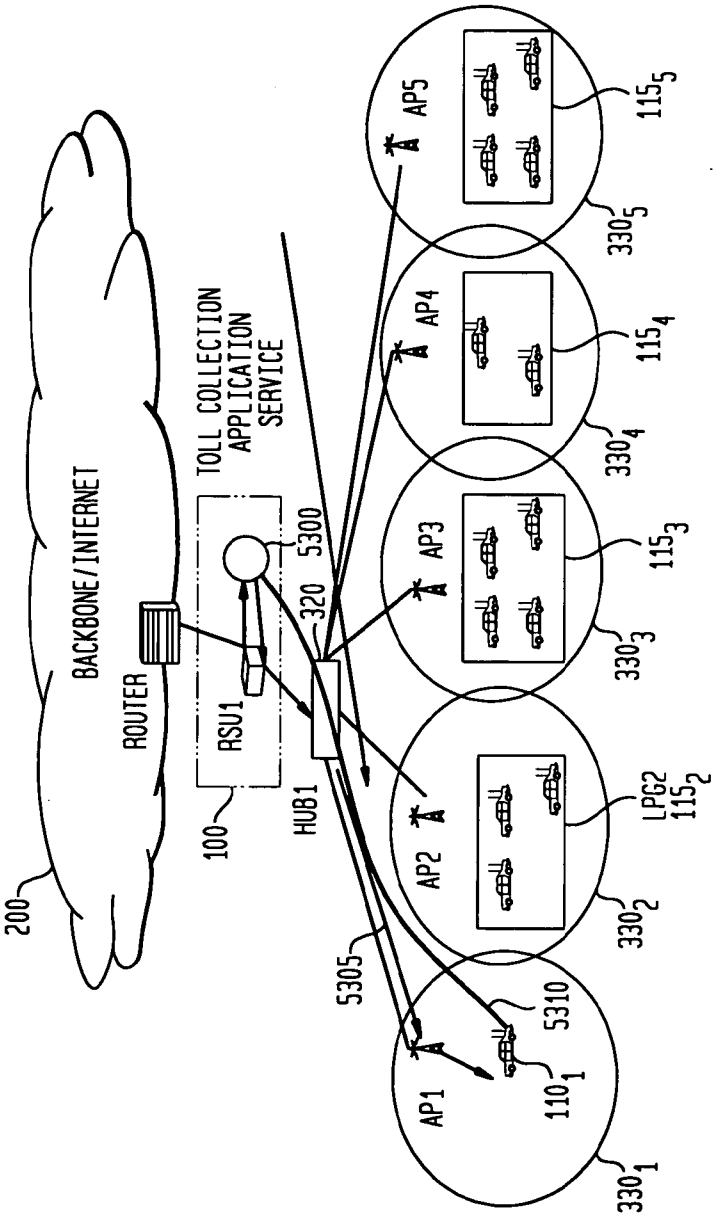
BACKBONE/INTERNET
ROUTER
TOLL COLLECTION APPLICATION SERVICE
RSU1
HUB1
5300
320
100
200
5305
5310
AP1
AP2
AP3
AP4
AP5
LPG2
110_1
115_2
115_3
115_4
115_5
330_1
330_2
330_3
330_4
330_5

METHOD AND COMMUNICATION DEVICE FOR ROUTING UNICAST AND MULTICAST MESSAGES IN AN AD-HOC WIRELESS NETWORK

FIELD OF INVENTION

[0001] This invention relates to a network for communication in a mobile environment. More specifically, the invention relates to a method of processing communication packet, generating routing and forwarding tables and routing unicast and multicast messages.

BACKGROUND

[0002] Wireless technology has become common in all aspects of life today, whether it be a wireless home or office network, so-called "hotspot" networks at local cafes, fast food chains or hotels, or even citywide implementations of WiFi technologies. The aim of this wireless push in society is to provide accessibility to information and to increase the productivity that society as a whole has enjoyed through the wide acceptance and utilization of computer networks and especially the Internet. Wireless networking technology, such as 802.11a/b/g, allows WiFi-enabled devices to connect to each other as they would in a standard wired network without the restriction of wires. People are given the freedom to remain connected to a network regardless of their physical location within the network coverage area.

[0003] With this goal in mind, several cities have attempted to create a wireless network for the city. For example, on Jul. 29, 2004, Grand Haven, Mich. claimed the distinction of being the "first WiFi city in America" with its implementation of a citywide wireless network covering the 6 square miles of the city and extending 15 miles into Lake Michigan. Many city officials see WiFi as an infrastructure necessity, much like sewage, power, telephone and transportation, for attracting and retaining business. The benefits of such systems for the city administrators are many, ranging from providing communication among city employees to providing public service announcements, advisories and other useful information to the citizenry at large.

[0004] In this drive for greater wireless connectivity, one area of everyday life has lagged behind. The roads and highways of America have remained largely untouched by wireless technology beyond rudimentary satellite and cellular phone systems. However, there are many advantages to be gained from wireless network technology implementations on American roads. Among the most notable are traffic advisories, Amber alerts, weather advisories, etc., which could be relayed to all vehicles that may be affected on an immediate basis.

[0005] Further, networking automobiles together allows the relay of information about a vehicle that may affect other vehicles in the vicinity. For example, an automobile may suddenly brake; this action could be reported to all vehicles behind the braking automobile instantaneously, thus allowing the drivers of the other vehicles to take necessary action with less urgency. This aspect has clear implications for reducing traffic accidents and congestion. This type of wireless networking may appear in many aspects of vehicle safety applications, including, but not limited to, urgent road obstacle warning, intersection coordination, hidden driveway warning, lane-change or merging assistance.

[0006] Vehicle safety communications ("VSC") may be broadly categorized into vehicle-to-vehicle and vehicle-with-infrastructure communications. In vehicle-to-vehicle communication, vehicles communicate with each other without support from a stationary infrastructure. Vehicles communicate with each other when they are within the same radio range of each other or when multiple-hop relay via other vehicles is possible. In vehicle-with-infrastructure communication, vehicles communicate with each other with the support of infrastructure such as roadside wireless access points. In this case, vehicles may also communicate with the infrastructure only.

[0007] Key VSC performance requirements include low latency (on the order of 100 milli-seconds) and sustained throughput (or equivalently, the percentage of neighboring vehicles that successfully receive warning messages) in order to support various VSC applications such as collision avoidance.

[0008] Simply installing wireless antenna on a moving vehicle and then transmitting uncoordinated communications would not suffice for satisfying these requirements. Specifically, by transmitting uncoordinated data, the airwaves would be flooded with a plurality of messages, which would result in a jamming of the radio waves, as the radio bandwidth is limited.

[0009] As such, these vehicles would interfere with each other's transmission and compete with each other for radio bandwidth for transmission. Further, all messages would propagate in all directions without any consideration of a desired transmission direction. Additionally, each vehicle would not match other vehicles' network configurations.

[0010] The high mobility and lack of inherent relationships make a priori configuration of vehicles into vehicle groups problematic (e.g., a vehicle does not know anything beforehand about its neighbor). All information that is necessary for setting up safety communications must be exchanged in near real-time among vehicles, and vehicles in the groups must configure themselves in near real-time so that safety communication can take place. The high mobility of uncoordinated vehicles implies frequent change of neighbors or vehicle groups, and poses difficulties of using support-servers (for mobility, address, name, media session) within vehicle groups. These key differences make existing tactical ad-hoc networking technologies not directly applicable to vehicle groups for safety communications.

[0011] Using WiFi methods employed elsewhere, such as hotspots, are impractical because of coverage, data traffic volume and latency issues. A normal rush hour commute around a major city could yield a vehicle density of as much as 600 vehicles per 1200-meter length of a 3-lane highway. In addition, all these vehicles are moving through individual coverage areas at a rate of 30 to 60 mph. Most wireless systems are not equipped to handle such a large rate of change in their network.

[0012] Specifically, as a vehicle enters the coverage area, it would need to be identified and issued configuration instructions by a wireless access point or router. When a vehicle leaves the coverage area, the wireless access point or router would need to update its records to remove the vehicle form its network. Thus, the speed of a vehicle through a particular coverage area determines how often updating information, e.g. handshaking, needs to be broadcast by the wireless access point or router and responded to by all of the vehicles in range.

All of these vehicles transmitting information at the same time could very easily overwhelm the system in short order.

[0013] Several attempts have been made to establish a vehicle-to-vehicle communication network. For example, FleetNet and CarTalk2000 have both developed a vehicle-to-vehicle communication network. Both of these systems use a GPS system in each vehicle for location information and to route messages. The FleetNet system uses position based routing and location awareness to relay messages. Specifically, as the backbone for their system, position data such as GPS information, plays a crucial role in the communication protocols deployed.

[0014] CarTalk 2000 also uses a position-based protocol. Each vehicle participating in the CarTalk2000-based inter-vehicle system must be equipped with GPS devices to detect its current position at any given time. However, a drawback to these systems is that the position information becomes outdated quickly, since the vehicles are moving at high speeds.

[0015] The exchange of constantly changing GPS information among vehicles, in order to perform GPS-positional routing, incurs too much protocol overhead and wireless bandwidth waste. As a result, such GPS-positional routing technology cannot achieve minimal communication latency or sustained multiple-hop throughput. Additionally, there is a need for a GPS to be installed in every vehicle in both Cartalk2000 and FleetNet.

[0016] Accordingly, there exists a need to create an ad-hoc network with both vehicles and roadside units as nodes of the network that is capable of achieving the stringent VSC performance requirements while achieving minimal communication latency or sustained multiple-hop throughput without requiring excessive bandwidth and significant protocol overhead.

BRIEF SUMMARY OF THE INVENTION

[0017] Disclosed is a method for routing packets of information between nodes within a local peer group in a wireless ad-hoc network. The method comprises receiving a first control packet including at least one routing parameter from a group header node, updating a routing table based upon the at least one routing parameter, receiving a second control packet including at least one additional routing parameter from a group node within the local peer group, and updating said routing table based upon said at least one additional routing parameter. The method further includes, once the updating steps are completed, generating a forwarding table from said routing table.

[0018] The unicast message is routed based upon the forwarding table.

[0019] The at least one routing parameter includes a group list, hop count and next hop to the group header. Updating the routing table based upon the first control packet includes modifying a destination list based upon the group list, initializing a next hop to a destination for all destinations except the immediate relay node that directly relayed the first control packet in said destination list as said group header, and modifying the next hop to the group header as the immediate relay node.

[0020] The updating of the routing table only occurs if the first and second control packets are in sequence and the method includes determining if the first and second control packets are in sequence.

[0021] Updating the routing table based upon the first control packet includes determining a source for the second control packet, determining a direct sender of the second control packet; modifying a next hop for the source via the direct sender based upon the at least one additional routing parameter in the second control packet; and modifying the next hop for the direct sender based upon the at least one additional routing parameter in the second control packet.

[0022] Also disclosed is a routing method for routing packets of information between nodes within a local peer group in a wireless ad-hoc network. The method comprises determining a type of control packet that is received by a node, determining if the control packet is received by the node in sequence; and updating a table based upon information contained in the control packet if the control packet is in sequence. The control packet can be a heartbeat control packet or a membership report. Each node in the local peer group can be a group header or a group node. If the node is a group node and the type of control packet is a heartbeat control packet, the updating step including modifying the table to include all members of a group membership list which is contained in the heartbeat control packet.

[0023] The method also includes determining if a node receives the control packet in sequence. This determination is based upon a comparison of a sequence number value contained in the control packet with a sequence number stored in memory. A control packet is received in sequence if the received sequence number value is greater than the sequence number stored in memory.

[0024] Also disclosed is a method of processing an incoming packet by a node in an ad-hoc network. The method includes receiving the incoming packet, determining if the incoming packet is destined for the node, determining a next hop to destinations based upon reading an entry in a routing table, if the incoming packet is not destined for the node and relaying the incoming packet to the next hop to destination. If the incoming packet is destined for the node, the node processes and consumes the incoming packet.

[0025] Also disclosed is a method for routing a multicast message in an ad-hoc wireless network. The method comprises the steps of receiving the multicast message for forwarding, determining if a multicast group destination for the multicast message is in a multicast forwarding table, determining if the multicast message has been previously forwarded, forwarding the multicast message if it is determined that the multicast message was not previously forwarded and if it is determined that the multicast group destination is in the multicast forwarding table and adding the multicast message to a sent list after the multicast message is sent.

[0026] The method further includes the step of determining if the multicast message is in a transmission queue, wherein if the multicast message is not in the transmission queue, the multicast message is added to the transmission queue for forwarding, and if the multicast message is in the transmission queue, the multicast message is discarded.

[0027] The multicast forwarding table can be generated by assigning a classification for each node within a local peer group, determining a hop count from a group header for each node, the group header is a node selected from all nodes within the local peer group;

[0028] collecting multicast membership information, and selecting forwarding nodes in a mesh for a multicast group based upon the collected multicast membership information and hop count from group header. Each selected forwarding node stores a multicast group identification in the multicast forwarding table. The classification, hop count from group

header and multicast membership information is broadcast from the group header to other nodes within the local peer group.

[0029] The multicast routing table can also be generated based upon a membership report including multicast membership information relayed to a group header, all nodes relaying the membership report to the group header from a multicast member become forwarding nodes for a multicast group that includes the multicast member. Each forwarding node records the multicast membership information in the multicast forwarding table as the multicast group destination.

[0030] The group header based upon the hop count from the group header for each multicast member adjusts the number of forwarding nodes for a multicast group. The adjustment prunes all forwarding nodes between the group header and a multicast member determined to be the closest multicast member of a specific multicast group to the group header. The group header also prunes itself. When a forwarding node is pruned, the forwarding node deletes the multicast membership information corresponding to the pruned multicast group, from the multicast group destination in the multicast forwarding table.

[0031] Also a forwarding node becomes a non-forwarding node for a multicast group node when a preset timer expires without receiving a membership report including the multicast membership information corresponding to the multicast group.

[0032] The method of routing a multicast message further includes selecting a transmission channel for each node having the multicast group destination listed in the multicast forwarding table and selecting a reception channel, for each node having the multicast group destination listed in the multicast forwarding table. The transmission and reception channels can be selected to alternate. For example, the transmission and reception channels are selected to alternate in a single alternate pattern. Alternatively, the transmission and reception channels are selected to alternate in a double alternate pattern.

[0033] The method further includes storing the sent multicast message in memory for a predetermined time, detecting if the sent multicast message is received from a neighboring forwarding node within the predetermined time and repeating the forwarding step if the sent multicast message is not detected within the predetermined time. The multicast message is discarded from memory if the sent multicast message is detected within the predetermined time.

[0034] Also disclosed is a wireless communication device. The device includes a means for receiving the multicast message for forwarding, means for determining if a multicast group destination for the multicast message is in a multicast forwarding table, means for determining if the multicast message has been previously forwarded, means for forwarding the multicast message if it is determined that the multicast message was not previously forwarded and if it is determined that the multicast group destination is in the multicast forwarding table; and means for adding the multicast message to a sent list after the multicast message is sent. The device further includes a means for storing the multicast forwarding table and the sent list.

[0035] Also disclosed is a means for receiving the incoming packet, means for determining if the incoming packet is destined for the node, means for determining a next hop to destinations based upon reading an entry in a routing table, if the incoming packet is not destined for the node and means for relaying the incoming packet to the next hop to destination.

[0036] Each of the wireless communication devices can be installed into a moving vehicle.

[0037] Also disclosed is a computer readable medium comprising a set of computer readable instructions capable of being executed by at least one processor in a wireless communication device of a moving vehicle for controlling the at least one processor to route messages.

BRIEF DESCRIPTION OF THE DRAWINGS

[0038] These and other features, benefits, and advantages of the present invention will become apparent by reference to the following figures, with like reference numbers referring to like structures across the views, wherein:

[0039] FIG. **1** illustrates an example of multiple LPGs in the vicinity of a roadside unit in accordance with the invention;

[0040] FIG. **2** illustrates an ad-hoc network including a roadside unit acting as a router in accordance with an embodiment of the invention;

[0041] FIG. **3**A illustrates an example of an ad-hoc network with isolated roadside units in accordance with an embodiment of the invention;

[0042] FIG. **3**B illustrates an example of an ad-hoc network with multiple roadside units in conjunction with the roadside units' remote access points in accordance with an embodiment of the invention;

[0043] FIG. **3**C illustrates a second example of an ad-hoc network with multiple roadside units in conjunction with the roadside units' remote access points in accordance with an embodiment of the invention;

[0044] FIG. **4** illustrates an example of an ad-hoc network with linked roadside units in accordance with an embodiment of the invention;

[0045] FIG. **5** illustrates a second example of an ad-hoc network with linked roadside units in accordance with an embodiment of the invention;

[0046] FIG. **6** illustrates an example of three roadside unit groups in accordance with an embodiment of the invention;

[0047] FIG. **7** illustrates an example of the channel assignment for the three roadside unit groups in FIG. **6**;

[0048] FIG. **8** illustrates an example of an ad-hoc network with a roadside unit acting as an application server in accordance with an embodiment of the invention;

[0049] FIG. **9** illustrates an example of an ad-hoc network with a roadside unit acting as an application server and a router in accordance with an embodiment of the invention;

[0050] FIG. **10** illustrates a second example of an ad-hoc network with a roadside unit acting as an application server and a router in accordance with an embodiment of the invention;

[0051] FIG. **11** is a block diagram of the roadside unit;

[0052] FIG. **12** is a flow chart of the header resolution method in accordance with an embodiment of the invention;

[0053] FIG. **13** illustrates an example of a dynamic Local Peer Group having a roadside unit as its group header;

[0054] FIG. **14** illustrates an example of a two stationary Local Peer Group, each having a roadside unit as its group header;

[0055] FIG. **15** illustrates an example of a dynamic Local Peer Group having a roadside unit as a group node;

[0056] FIG. **16** illustrates an example of a two stationary Local Peer Group, each having a roadside unit as a group node;

[0057] FIG. **17** illustrates an example of a heartbeat control packet used for forming a Local Peer Group and generating a unicast routing table **2300** in accordance with an embodiment of the invention;

[0058] FIG. **18** illustrates an example of a Membership Report packet used for forming a Local Peer Group and generating a unicast routing table **2300** in accordance with an embodiment of the invention;

[0059] FIG. **19** is a flow chart for generating and maintaining a unicast routing table **2300**;

[0060] FIG. **20** is a flow chart for the process of routing a unicast packet in accordance with an embodiment of the invention;

[0061] FIG. **21** is a flow chart for the process of updating the unicast routing table **2300**;

[0062] FIG. **22** is a finite state machine for routing of the unicast packet;

[0063] FIG. **23** illustrates an example of the internal unicast routing table **2300** in accordance with an embodiment of the invention;

[0064] FIG. **24** illustrates an example of a multicast group **2400**;

[0065] FIG. **25** is a flow chart for creating a multicast tree according to one embodiment of the invention;

[0066] FIG. **26** illustrates an example of a multicast group **2400** formed in accordance with the embodiment depicted in FIG. **25**;

[0067] FIG. **27** illustrates an example of a heartbeat control packet used for creating a multicast tree in accordance with the embodiment depicted in FIG. **25**;

[0068] FIG. **28** illustrates an example of a Membership Report packet used for creating a multicast tree in accordance with the embodiment depicted in FIG. **25**;

[0069] FIG. **29** is a flow chart for generating and maintaining a multicast forwarding table in accordance with the embodiment depicted in FIG. **25**;

[0070] FIG. **30**A is a functional state transition chart for a Group Header in accordance with the embodiment depicted in FIG. **25**;

[0071] FIG. **30**B is a functional state transition chart for a Group Member in accordance with the embodiment depicted in FIG. **25**;

[0072] FIG. **31** illustrates an example of a multicast forwarding table in accordance with the invention;

[0073] FIG. **32** illustrates an example of a Membership Report packet used for creating a multicast tree in accordance with a second embodiment of the invention;

[0074] FIG. **33** is a flow chart for generating and maintaining a multicast forwarding table using the second embodiment of the invention;

[0075] FIG. **34** is a function state transition chart for a node in accordance with the second embodiment of the invention;

[0076] FIG. **35** illustrates an example of a prune packet used to create a multicast tree in accordance with a third embodiment of the invention;

[0077] FIG. **36** is a flow chart for generating and maintaining a multicast forwarding table in accordance with the third embodiment;

[0078] FIG. **37**A is a functional state transition chart for a Group Header in accordance with the third embodiment;

[0079] FIG. **37**B is a functional state transition chart for a Group Member in accordance with the third embodiment;

[0080] FIG. **38**A illustrates a multicast group **2400** formed in accordance with the second embodiment of the invention;

[0081] FIG. **38**B illustrates a multicast group **2400** formed in accordance with the third embodiment of the invention;

[0082] FIG. **39** illustrates the hierarchical functionality for a forwarding node in multicast mode in accordance with an embodiment of the invention;

[0083] FIG. **40** is a flow chart for the process of routing a multicast packet in accordance with an embodiment of the invention;

[0084] FIG. **41** is a hierarchical network layer flow chart for the process of routing a multicast packet in accordance with another embodiment of the invention;

[0085] FIG. **42** is a hierarchical network layer flow chart for the process of routing a multicast packet in accordance with yet another embodiment of the invention;

[0086] FIG. **43** illustrates a channel assignment scheme in accordance with an embodiment of the invention;

[0087] FIG. **44** illustrates an example of channel assignment for the transmission and reception channels in accordance with a channel alternating assignment scheme;

[0088] FIG. **45** illustrates an example of channel assignment for the transmission and reception channels in accordance with a double channel alternating assignment scheme;

[0089] FIG. **46** is a flow chart of the process of assigning the transmission and reception channels in accordance with a double channel alternating assignment scheme;

[0090] FIG. **47** illustrates an example of a roadside unit providing authentication services in accordance with an embodiment of the invention;

[0091] FIG. **48** illustrates an example of a roadside unit providing network configuration assistance in accordance with an embodiment of the invention;

[0092] FIG. **49** illustrates an example of a roadside unit used as an information collection device;

[0093] FIG. **50** illustrates an example of a roadside unit providing safety alert routing in accordance with an embodiment of the invention;

[0094] FIG. **51** illustrates an example of a roadside unit performing position and tracking functionality in accordance with an embodiment of the invention;

[0095] FIG. **52** illustrates an example of a roadside unit acting as a vehicle maintenance server and database in accordance with an embodiment of the invention; and

[0096] FIG. **53** illustrates an example of a roadside unit acting as a toll collection device in accordance with an embodiment of the invention.

DETAILED DESCRIPTION OF THE INVENTION

[0097] In accordance with the invention, the ad-hoc network is divided into two types of nodes: a roadside unit (hereinafter "RSU") and a moving vehicle. The RSU is a stationary node while vehicles can be moving in groups.

[0098] FIG. **1** illustrates an example of the ad-hoc network in accordance with the invention. The RSU **100** is located along the side of a roadway. The number of RSU **100** used in the network will depend on several factors such as the range of the radio antenna of the RSU **100**, desired communication range, number of moving devices, topology of the land, the environmental conditions, traffic patterns and population density. FIG. **1** illustrates two RSUs **100**. The encircled area represents the radio range for each RSU **100**. Each RSU **100**

can be used to communicate with moving-vehicles **110** traveling either alone or a group of vehicles.

[0099] The moving vehicles **110** can be organized into manageable groups. These groups are used to coordinate transmission of data between the nodes. The groups are built based upon the relative location of neighboring nodes or based upon a fixed location. This grouping or Local Peer Group ("LPG") is the basis for routing radio signals within a single LPG **115**, as well as between multiple LPGs.

[0100] FIG. **1** illustrates three LPGs **115**. Each LPG **115** consists of at least one moving vehicle **110**. FIG. **1** shows that LPG 1 $\mathbf{115}_1$ included three moving vehicles, LPG 2 $\mathbf{115}_2$ includes two and LPG 3 $\mathbf{115}_3$ includes three moving vehicles. The RSUs **100** can exist within the LPGs **115** and act as a special LPG node or exist as a separate node outside the LPG **115**. When the RSU **100** is used in conjunction with the LPG **115** and not a node within the LPG **115**, the RSU **100** can act as a boundary node for inter LPG communication. Typically, the radio coverage of one RSU **100** will be larger than the size of one LPG, i.e., more than one LPG **115** will be within the radio range of one RSU **100**. The case is illustrated in FIG. **1**. Accordingly, packets from one LPG **115** can be broadcast to another LPG **115** using the RSU **100**. In this case, the RSU **100** will include information regarding the LPGs stored in its memory.

[0101] The moving vehicles **110** communicate with each other over the vehicle-vehicle (V-V) channels. The moving vehicles communicate with the roadside unit via the vehicle-to-roadside (V-R) channel. Additionally, the RSUs **100** communicate with each other via a R-R channel or R-B channel (backbone). Since R-R communications would use a dedicated channel or wired backbone, the communication would not interfere with V-V or V-R communication. There are several alternatives for channel sharing between the V-V and V-R channels. In the preferred embodiment, there is a dedicated channel for V-R communication. The remaining channels will be shared for V-V and/or V-R communication. The V-R channel can be in the same RF frequency band as the other channels. Alternatively, the V-R channel can be in a difference RF frequency band allowing for different communication range and data rates.

[0102] In another embodiment, all channels are dynamically shared for both V-V and V-R. This approach allows for optimized performance. However, complexity is introduced in probing and selecting non-interfering channels.

[0103] According to another embodiment, there is a dedicated channel only assigned for V-R with others channels shared for only V-V. Alternatively, a dedicated channel for V-R is used with a second dedicated channel for V-V. The remaining other channels will be shared for V-V and V-R communications. For purposes of the proceeding description of the invention, the preferred embodiment of the channel assignment will be used. The RSU **100** can have many functions such as a router, an applications server or a combination thereof.

[0104] FIG. **2** illustrates an example of an ad-hoc network when at least one RSU **100** functions as a router. The ad-hoc network includes the RSUs **100** a backbone **200**, e.g. Internet and the moving vehicles **110**. The RSU **100** will include three network hierarchical layers: network layer **210**, a MAC layer **215** and a physical layer **220**.

[0105] The physical layer **220** includes devices such as hubs, repeaters and wireless radios. The physical layer **220** functions include the transmission of signals, representing the high layer data, over a communications channel such as the physical radio link.

[0106] The MAC (Media Access Control) layer **215** handles the procedures for transferring data between network entities and to detect and possibly correct errors that may occur in the physical layer **220**. For example, in IEEE 802.11 the MAC layer **215** manages and maintains communications between 802.11 stations (radio network cards and access points) by coordinating access to a shared radio channel and utilizing protocols that enhance communications over a wireless medium. The 802.11 MAC layer **215** uses an 802.11 Physical (PHY) Layer, such as 802.11b or 802.11a or 802.11p, to perform the tasks of carrier sensing, transmission, and reception of 802.11 frames.

[0107] The network layer **210** performs functions for end-to-end communication among network entities. For example, the functions include routing of messages from source node to destination node, multicasting of messages from source node to destination nodes in the same multicasting group, or mobility (location) management of the network entities for routing or multicasting purpose. The network layer **210** discovers and maintains unicast/multicast routes as data paths and also provides data delivery methods among end users in accordance with the unicasting and multicast procedures and protocols described herein. The end users can be either moving vehicles **110** or RSUs **100**.

[0108] The RSU **100** can route data to all moving vehicles **110** within its radio coverage. Furthermore, depending on the relative locations of the RSUs **100**, the RSU **100** can route data between the RSUs **100**, e.g., R-R communication. Additionally, the RSU **100** can route data from/to the backbone **200**, e.g., route data from backbone to the moving vehicle **110**. As depicted in FIG. **2**, the moving vehicle **110** travels through the radio range of multiple RSUs **100** in the network which would cause frequent IP handoffs.

[0109] There are several potential deployment configurations for the RSUs **100**. In an embodiment, the RSUs **100** are positioned in isolated locations. In this embodiment, RSUs **100** have no connection to other RSUs **100** because the RSUs **100** are out of range from each other. The routing function of the RSUs **100** is only provided with that radio range of the RSU. Deployment of isolated RSUs **100** may have limited benefits. One benefit is that if the RSUs **100** are sparely deployed, there is no channel interference. The same V-R channel can be used for communication in multiple RSUs **100**. Additionally, the cost of deploying the RSUs **100** is minimal. A few number of RSUs **100** can be used to provide service in certain problematic areas, e.g., busy intersections, known trouble spots or accident-prone spots. Preferably, this embodiment will be used for an initial stage deployment. However, the RSUs **100** are unconnected and cannot assist moving vehicles **110** within nearby RSUs **100** or provide any information regarding the nearby RSUs. Additionally, moving vehicles **110** may have to duplicate information at each RSU **100** to make sure information is propagated to all RSUs **100** within the neighborhood.

[0110] FIG. **3**A illustrates two isolated RSUs **100**. RSU1 $\mathbf{100}_1$ can communicate with moving vehicle 1 $\mathbf{110}_1$, vehicle 2 $\mathbf{110}_2$ and but not vehicles 3-6 $\mathbf{110}_{3\text{-}6}$ and RSU2 $\mathbf{100}_2$. Similarly, RSU2 $\mathbf{100}_2$ can communicate with vehicles 5 $\mathbf{110}_5$, and vehicle 6 $\mathbf{110}_6$, but not with vehicles 1-4 $\mathbf{110}_{1\text{-}4}$.

[0111] In another embodiment, a single RSU **100** can be deployed with multiple remote access points. In this configu-

ration, an RSU **100** controls multiple wireless access points (APs) in roadways. The RSU **100** communicates with moving vehicles **110** or an entire LPG **115** through the APs. The network layer peer for a vehicle is an RSU and the peer for MAC layer and Physical layer of a moving vehicle **110** is the AP. For 802.11a or 802.11p communications, the moving vehicles **110** use the APs. To handle network layer communications the moving vehicles **110** work primarily with the RSU **100**. The AP handles the MAC layer **215** and Physical layer **220** functions for the RSU **100**. The RSU **100** itself only handles the network layer functions **210**. By implementing APs, the service area of an RSU **100** is increased.

[0112] AN RSU **100** with multiple wireless access points can include a switch or a broadcast Bus to achieve routing functionality between more than one AP.

[0113] FIG. **3**B illustrates the ad-hoc network for multiple RSUs **100** with routing functionality using multiple access points which are switch based. As depicted, RSU1 $\mathbf{100}_1$ controls five APs (collectively AP **330**). RSU2 $\mathbf{100}_2$ also controls five APs (collective AP **330**). A hub switch **320** is located between each RSU **100** and the APs **330** so that only one AP **330** is responsible for communication, i.e., receiving and forwarding, data, to and from a moving vehicle **110**. When a moving vehicle **110** is within the wireless coverage area of an AP, the MAC layer **215** and physical layer **220** create an association of the moving vehicle **110** with that specific AP **330** via beacons and handshakes. In addition, the RSU **100** can obtain the information from the AP **330** about the associated moving vehicles within each AP's coverage area. For example, AP **5** is the access point for all vehicles within its radio range. Each AP includes two hierarchical layers, the physical layer and MAC layer.

[0114] This configuration supports unicast routing, multicast routing and mobility detection. For unicasting, each RSU **100** knows the next hop for messages destined to each moving vehicle **110** based upon the forwarding table created and stored in memory for each node within the network. Even if the RSU **100** is not a node within a LPG **115**, the RSU **100** can overhear the heartbeat control message **1700** on its V-R channel. This information can be used by the RSU **100** for routing from the RSU **100** or APs **330** to a LPG **115** and the moving vehicles **110**. The next hop is the AP **330** that is associated with the moving vehicle **110**. In other words, the APs **330** are the MAC proxy for the moving vehicles. Upon receiving the messages from the RSU **100**, the switch **320** forwards the message to a particular AP **330** associated with a particular moving vehicle **110**: Using the hub switch **320**, the Unicast message is only sent to the designated AP **330** and is never broadcast to all APs.

[0115] For example, the next hop for moving vehicle 4 $\mathbf{110}_4$ is AP 5 $\mathbf{330}_5$. Therefore, RSU1 $\mathbf{100}_1$ records AP 5 $\mathbf{330}_5$ as the next hop for moving vehicle 4 $\mathbf{110}_4$ in its memory. In other words, all messages destined for moving vehicle 4 $\mathbf{110}_4$ will be routed through AP 5 $\mathbf{330}_5$ while vehicle 4 $\mathbf{110}_4$ is within range of AP5 $\mathbf{330}_5$.

[0116] For multicast operations, only the APs **330** associated with moving vehicles **110** that join a multicast group **2400** become a multicast forwarding node for the multicast group **2400**. Multicast groups **2400** will be described later in greater detail. The switch **320** knows which APs **330** are forwarding nodes and the multicast packets are delivered to only those forwarding nodes. A forwarding node is a node that forwards multiple messages to the destination nodes, which are in a multicast group **2400**.

[0117] For example, if a multicast message is destined for vehicles 2 $\mathbf{110}_2$ and vehicle 4 $\mathbf{110}_4$, vehicle 2 $\mathbf{110}_2$ and vehicle 4 $\mathbf{110}_4$ join a multicast group **2400**. RSU1 $\mathbf{100}_1$ knows that AP3 $\mathbf{330}_3$ and AP5 $\mathbf{330}_5$ are the forwarding nodes for this multicast group **2400**, as the next hop information is recorded in the RSU1 $\mathbf{100}_1$. RSU1 $\mathbf{100}_k$, AP3 $\mathbf{330}_3$ and AP5 $\mathbf{330}_5$ become forwarding nodes for the multicast message. The switch **320** only delivers the multicast message to AP3 $\mathbf{330}_3$ and AP5 $\mathbf{330}_5$. This configuration also supports mobility detection. The next hop information for unicasting and forwarding node information for multicasting is continuously updated. The APs **330** or the moving vehicles **110** perform mobility detection. In an embodiment, the APs **330** detects mobility based upon the use of a periodic beacon. The beacon will include the AP identification. The moving vehicles **110** will respond to the periodic beacon. If the AP **330** receives the response, the AP **330** will maintain itself as the next hop or forwarding node for the moving vehicle. On the other hand, if the AP **330** does not receive a response, the AP **330** will inform the RSU **100** that the moving vehicle has moved out of the radio range of the AP. The RSU **100** will update that next hop and forwarding node information for the vehicle.

[0118] In another embodiment, the moving vehicle **110** will affirmatively change the next hop and forwarding node information stored in the RSU **100**. In this embodiment, the moving vehicle **110** will decide which AP **330** should be the next hop or forwarding node based upon a received SNR value. The moving vehicle can make this decision based upon two separate criteria. In an embodiment, the moving vehicle can compare the receive signal's SNR with a predetermined threshold value. If the SNR is above the threshold value, then the moving vehicle **110** will declare the channel no longer available and elect a different AP **330** for the next hop or forwarding node **2410**. Alternately, the moving vehicle **100** can select the strongest channel, i.e., signal from neighboring APs **330** based upon a comparison of signal strengths received from all APs **330** within the moving vehicle's radio range. The moving vehicle **110** will send a message updating the next hop and forwarding node information to the new AP **330**. The new AP **330** will inform the RSU **100** of the mobility such that the information recorded in the RSU **100** can be modified. The movement of the moving vehicle **110** causes the handoff between the APs **330**. However, the moving vehicle is still within radio range of the same RSU **100**. In other words, in this architecture the handoff is performed below the IP layer, only MAC information such as MAC address is updated.

[0119] For example, if moving vehicle 4 $\mathbf{110}_4$ moves from AP5 $\mathbf{330}_5$ to AP4 $\mathbf{330}_4$, AP4 $\mathbf{330}_4$ becomes a new MAC proxy for vehicle 4 $\mathbf{110}_4$ and informs its proxy status to RSU1 $\mathbf{100}_1$. Afterwards RSU1 $\mathbf{100}_1$ forwards to AP4 $\mathbf{330}_4$ messages destined to vehicle 4 $\mathbf{110}_4$. Since the handoff between APs **330** under one RSU **100** doesn't involve any IP layer operation, IP layer handoff happens less frequently and takes place only when a moving vehicle **110** moves from one RSU **100** to another.

[0120] FIG. **3**C illustrates the ad-hoc network for multiple RSUs **100** with routing functionality using multiple access points that are broadcast bus-based. As depicted, RSU1 $\mathbf{100}_1$ controls five APs (collectively AP **330**). RSU2 $\mathbf{100}_2$ also controls five APs (collective AP **330**). Instead of a switch **320**, as depicted in FIG. **3**B, a bridge bus **340** connects an RSU **100** and its APs **330** in the architecture depicted in FIG. **3**C. Unlike the previous architecture which is switch-based (FIG.

3B), messages sent by an RSU **100** toward the moving vehicles **110** are delivered to all the APs **330** under the RSU **100**. However, by using a bridge bus **340** only the APs **330** associated with the destination, i.e., moving vehicle **110**, forwards the message to the moving vehicle **110**.

[0121] While this configuration supports unicast routing, multicast routing and mobility detection, the RSUs are not used to control, maintain or manage any of these features. An advantage of the embodiment is that RSU1 $\mathbf{100}_1$ doesn't need to maintain the information about any AP association with the vehicle. The forwarding operation is simplified using the bridge bus **340**, as it minimizes the overhead for maintaining the next hop information and forwarding node information. However, there is an increase in overheads on APs **330** and APs **330** face unnecessary traffic.

[0122] In unicasting operation, a message destined to one moving vehicle **110** is forwarded to all the APs under RSU1 $\mathbf{100}_1$ control. RSU **100** only records the moving vehicle's MAC address as a direct connect, e.g., no next hop or forwarding node information. Only the AP **330** that has the MAC address for the destination vehicle will forward the message. For example, if a message is destined for vehicle 4 $\mathbf{110}_4$, RSU1 $\mathbf{100}_1$ forwarded the message to all the APs **330**, but only AP5 $\mathbf{330}_5$ can forward the message to moving vehicle 4 $\mathbf{110}_4$.

[0123] Similarly, with the multicast operation described above with respect to FIG. **3**B, only the APs **330** associated with the vehicles which have joined a multicast group **2400** become a forwarding node **2410** for the multicast group **2400**. However, unlike the configuration described in FIG. **3**B, not only the forwarding APs but other APs (i.e., no vehicle with the multicast membership under these APs) receive the multicast packets. The RSU **100** does not record any information regarding the forwarding nodes. For example, a multicast message is destined for moving vehicles 2 $\mathbf{110}_2$ and vehicle 4 $\mathbf{110}_4$, vehicles 2 $\mathbf{110}_2$ and vehicle 4 $\mathbf{110}_4$ join a multicast group **2400**. RSU1 $\mathbf{100}_1$ routes the message to AP1-5 $\mathbf{330}_{1\text{-}5}$. However, only AP3 $\mathbf{330}_3$ and AP 5 $\mathbf{330}_5$ forward the message to vehicles 2 $\mathbf{110}_2$ and vehicle 4 $\mathbf{110}_4$, respectively.

[0124] For mobility detection, using a bridge bus **340** instead of a switch **320** has the advantage that the detection is quicker. This is because the RSU **100** is not involved with the detection process nor is the RSU **100** informed. Therefore, messages between the AP **330** and RSU **100** are avoided. The handoff is completed between a mobile vehicle and the associated APs. The mobility detection is performed in the same manner as described above, however, only the MAC address cache in the APs **330** is updated.

[0125] The above identified embodiments have been described where the RSUs **100** are located in isolation from each other, however, in another embodiment of invention, the RSUs **100** can be located within radio range of each other. In this embodiment, the RSU **100** are linked together to form an RSU network. The linked RSU network can be densely or sparsely populated. These RSUs **100** have communication links between each other and provide functions outside the RSU range through coordination with other RSUs **100**. When the RSUs **100** are interconnected, the RSUs **100** can share all of the information. Moving vehicles **110** do not have to send duplicate information to each passing RSU **100**. The liked RSUs **100** can exchange location information, IP and MAC channel information to assist the moving vehicles to pre-configure the connection for neighboring RSUs **100**. Furthermore, the linked RSUs **100** can be used to route packets such as accident information from one area to another. However, there is a tradeoff for linked RSUs **100**, MAC channel interference. For sparely populated RSUs **100**, the MAC channel interference is minimal; the same V-R channel can be used for any RSU. However, if there are densely populated RSUs **100** within a given area, there is a potential for MAC channel interference that requires channel assignment for the V-R channels.

[0126] FIG. **4** illustrates an example of ad-hoc network with a sparsely populated linked RSUs **100**. RSU1 $\mathbf{100}_1$ and RSU2 $\mathbf{100}_2$ are wirelessly or wire linked **400** to each other. Therefore, information can be shared by the two RSUs $\mathbf{100}_1$ and 100_2. Since the two RSUs $\mathbf{100}_1$ and 100_2 are sparsely populated within the area, the same V-R channel can be used. Additionally, the radio range or coverage for the two RSUs $\mathbf{100}_1$ and $\mathbf{100}_2$ can be selected to cover a large area without a concern of interference. This configuration would be typically used is a rural or unpopulated area.

[0127] FIG. **5** illustrates an ad-hoc network with densely populated interconnected RSUs **100**. As depicted in FIG. **5**, the ecliptic shaped lines represent the radio range of each RSU **100**. The radio range of each RSU **100** is selected to be smaller than the sparsely populated RSU example and is designed to handle fewer moving vehicles **110** simultaneously. However, this design will result in short vehicle connection time with each RSU **100**, channel contention, frequent handoffs and little time for address assign and authentication. A handoff will have to take place every few seconds, which causes the moving vehicle **110**, to establish a new address, a new connection and go through the security mechanisms at every handoff.

[0128] In order to avoid these problems, an RSU group will be formed. An RSU group is formed from more than one RSU **100**. FIG. **6** illustrates a plurality of RSU groups $\mathbf{600}_{1\text{-}3}$, respectively. Instead of dealing with an RSU **100** individually, a moving vehicle **110** will deal with the RSU group $\mathbf{600}_{1\text{-}3}$ as one functional unit. Some of the RSU group $\mathbf{600}_{1\text{-}3}$ operations are channel reservation and coordination, authentication and handoff handshake. For the downlink, in order to minimize data loss, the same downlink stream can be sent by the RSU group **600** or subgroup. The same set of configuration parameters with several RSUs **100** will be used for neighboring RSUs that form the RSU group **600**. This will avoid constant handoff and configuration changes. When a moving vehicle **110** enters an RSU group, e.g., $\mathbf{600}_1$, the moving vehicle will perform channel reservations, authentication and handshake only once.

[0129] The RSU groups will be used for V-R and V-backbone communication, and emergency communication. The RSU groups can also be used to assist in the formation of a local peer group (LPG), tracking, coordination and optimization thereof.

[0130] As mentioned above, when a moving vehicle **110** enters an RSU **100** or RSU group $\mathbf{600}_{1\text{-}3}$, the moving vehicle **110** sends a channel reservation request to the RSU **100** or RSU group $\mathbf{600}_{1\text{-}3}$. The first RSU **100** within the RSU group, i.e., $\mathbf{600}_1$ will assign the channel and timeslot for the entering moving vehicle. This assignment is for the use in V-R communications. The channel will be selected from multiple channels to avoid any interference. Each moving vehicle **110** is assigned a specific sub-channel available for the RSU group **600**.

[0131] For channel access, there are two possible schemes: synchronous and asynchronous access. In one embodiment,

synchronous access is used. Each moving vehicle **110** is assigned a fixed-size time slot within a sub-channel. For example, a vehicle is assigned to Channel 4, Time Slot 2 while second vehicle is assigned to Channel 4, Time Slot 5. The vehicles communicate only when it is their turn, but remains silent otherwise. Within a time slot, a portion of the bandwidth is reserved for uplink communication and the rest for downlink. In accordance with this scheme each moving vehicle **110** has equal access to the airwaves. An advantage of the use of synchronous access is that no time is wasted on contention resolution. The "hidden terminal" problem also does not exist if adjacent RSU groups use non-overlapping channels.

[0132] In another embodiment, asynchronous scheme is used. Each moving vehicle **110** is assigned to a sub-channel. Moving Vehicles **110** within a sub-channel contend for channel access through the use of contention resolution, e.g., CSMA scheme. This scheme is random access based.

[0133] FIG. **7** illustrates the channel assignment for multiple RSU groups **600**. A network provider or an RSU group management entity can perform the channel assignment to an RSU group **600**. As depicted in FIG. **7**, RSU Group1 $\mathbf{600}_1$ is assigned channels 1-3, RSU Group2 $\mathbf{600}_2$ is assigned channels 4-6 and RSU Group3 $\mathbf{600}_3$ is assigned channels 1-3. Adjacent RSU groups **600** use different sub-channels so moving vehicles **110** within an RSU group **600** will not be able to become a hidden terminal to vehicles in another RSU group **600**. RSU Group1 $\mathbf{600}_1$ and RSU Group3 $\mathbf{600}_3$ can be assigned the same channel because of their relative location. There would be no channel interference caused by RSU Group1 $\mathbf{600}_1$ and RSU Group3 $\mathbf{600}_3$. Within an RSU group **600**, each moving vehicle **110** is assigned to a sub-channel (channel) as well as a time slot. This ensures that only one moving vehicle **110** will be transmitted at any one time. For example, in FIG. **7** a first vehicle is assigned channel 2, time slot 4 and the second vehicle is assigned channel 2, time slot 1.

[0134] FIG. **8** illustrates an ad-hoc network where the RSU **100** only acts as an application/information server. The ad-hoc network includes the RSUs **100**, a backbone **200**, e.g., Internet and the moving vehicles **110**. The RSU **100** will include four network hierarchical layers, network layer **210**, a MAC layer **215**, a physical layer **220**, and application layer **800**. The backbone **200** will include at least one router.

[0135] In this configuration, the RSUs **100** will not have any routing function. The RSU **100** will act as an end-host of a public domain. The RSU **100** will be an application server, information storage device or service provider, for example, local advertisement, real-time traffic management or map updates, etc. Each moving vehicle **110** will be assigned a private IP address by the RSU **100** and will have access to the backbone **200** using the RSU **100**. The RSU **100** will provide Network Access Translation of the private IP to provide the access to the backbone **200**. When the RSU **100** only acts as an application server, the RSU **100** cannot support or detect mobility of the moving vehicle **110**.

[0136] FIG. **9** illustrates an ad-hoc network where the RSU **100** acts as both an application/information server and a router. The ad-hoc network includes the RSUs **100**, a backbone **200**, e.g., Internet and the moving vehicles **110**. The RSU **100** will include four network hierarchical layers: network layer **210**, a MAC layer **215**, a physical layer **220**, and application layer **800**, as well as a router co-located with the RSU **100**.

[0137] This architecture does not require NAT or the assignment of a private IP address. Vehicles can be assigned a public IP address making it easier to access the Internet. The RSU **100** required for this architecture will have heavy computing power since it functions as both a router and application server. The RSU **100** can be used with or without remote APs **330**.

[0138] FIG. **10** illustrates an example of an ad-hoc network with an RSU **100** functioning as both a router and application server. As depicted in FIG. **10**, RSU1 $\mathbf{100}_1$ and RSU2 $\mathbf{100}_2$ each will have access to router **1010** and **1020** in the backbone **200**. RSU1 $\mathbf{100}_1$ and RSU2 $\mathbf{100}_2$ consist of a router **1030** and application service **1040**. Additionally, the network includes remote AP1-5 $\mathbf{330}_{1\text{-}5}$ for RSU1 $\mathbf{100}_1$ and AP6-10 $\mathbf{330}_{6\text{-}10}$ for RSU2 $\mathbf{100}_2$. FIG. **10** is similar to FIGS. **3**B and **3**C except that the RSUs **100** have router and application functions, instead of the only routing functions illustrated. Additionally, the depicted configuration in FIG. **10** illustrates that the hub can be either a switch **320** (as shown in FIG. **3**B) or a bridge bus **340** (as shown in FIG. **3**C). The selecting of either the switch **320** or bridge bus **340** will depend on several design factors, e.g., system engineering design parameters such as latency performance and capacity utilization and system requirements such as cost or services to be supported.

[0139] In another embodiment, the architecture depicted in FIGS. **4-7** can be modified to include the functionality of application server and router for the RSUs **100** by adding application service **1040** to the RSUs **100**.

[0140] In an embodiment of the invention, RSUs **100** can be nodes within a LPG **115**. The purpose of the LPG **115** is to build degrees of coordination among neighboring nodes. These neighboring nodes are moving devices or fixed stationary nodes with wireless communications capabilities. A moving wireless device or node can be a PDA, laptop, cell phone, or a moving vehicle with a wireless device either attached or embedded. In the preferred embodiment, the moving wireless device is a moving vehicle **110** with associated communications devices, which are installed in the vehicles, or independently brought into the vehicles, as well as pedestrians with communication devices. The wireless devices herein are collectively referred to any nodes or moving vehicles **110**. Intra-LPG communication is used to communicate between nodes within immediate vicinity that have organized themselves a local peer group. Inter-LPG communication is used to communicate between nodes close neighborhoods, i.e., between nodes that belong to different local peer groups in the neighborhood.

[0141] There are several types of LPGs **115**, stationary LPGs, dynamic LPGs, and hybrid LPGs. A stationary LPG is defined by a specific location or area, i.e., if a node is in an area defining, e.g., area A, the node is in LPG A. If a node is in different area, e.g., area B, the node is in LPG B and so on. The particular size of a stationary LPG is a design choice, depending on various factors, e.g., range of the radio antenna, communication range, number of moving devices, topology of the land, the environmental conditions, traffic patterns and population density. The location and size of the stationary LPG is fixed. However, each stationary LPG might be of a different size since traffic patterns and population (moving vehicles **110**) density is different in different places. If an RSU **100** is within the predefined LPG **115**, the radio range of the RSU **100** will define the size of the stationary LPG.

[0142] By using an RSU **100**, a moving vehicle **110** will be able to detect the location of the stationary LPG by hearing

either a heartbeat control packet **1700** from the RSU **100**, or a beacon from the APs **330**. The moving vehicles **110** will change stationary LPGs as the moving vehicles **110** change their position. Alternatively, a moving device will include a database of LPGs **115** and their locations. In another embodiment, if there are multiple RSUs **100** within a given area, at least one RSU **100** can provide information regarding the relative position or locations of other RSUs **100** in the neighborhood to facilitate handoff between multiple LPGs **115** by enabling the moving vehicle **100** to locate an LPG **115** quickly.

[0143] Stationary LPGs have a significant advantage of supporting integration with wireless infrastructure to provide backbone access or inter-LPG communication even when some LPGs **115** are empty or do not have many moving vehicles **110** within the LPG **115**. Each stationary LPG is assigned a unique identifier to facilitate communication. Since every stationary LPG area is well defined, formations and naming the LPG **115** is easier than the dynamic LPG. Additionally, rules regarding merging and splitting an LPG **115** are not a concern when using a stationary LPG.

[0144] A second type of LPG **115** is a dynamic LPG. As opposed to a stationary LPG, a dynamic LPG is formed based upon the radio coverage of neighboring nodes so that a node can coordinate communications without worrying about exact location of the other nodes.

[0145] Since the dynamic LPG is formed based on radio coverage, moving vehicles **110**, within the LPG **115** can always communicate with each other and to an RSU **100** via single or multiple-hop transmission. One node within the LPG **115** is able to control the size of the dynamic LPG, in order to keep the number of nodes within each LPG **115** or, alternatively, the number of radio hops from this node to the edge of the dynamic LPG reasonably small so that the communication can be performed efficiently with low latency. This node is called a group header (GH) as will be described later in detail. Additionally, in contrast with a stationary LPG, the dynamic LPG ensures that communication is always possible within each LPG **115**. In a dynamic LPG, an LPG **115** can be formed outside the RSU **100** radio range, unlike with stationary LPGs.

[0146] In one embodiment, an ad-hoc peer-to-peer network can be created from one or more stationary LPG or one or more dynamic LPG. In another embodiment, the ad-hoc peer-to-peer network can be created from both stationary LPGs and dynamic LPGs as a hybrid LPG network. A Hybrid LPG network combines the benefits of the stationary LPG and dynamic LPG while removing the problems caused by each taken separately.

[0147] The hybrid approach would take advantage of the roadway topology. Specifically, when infrastructure is not available, a dynamic LPG is used to form the network. When infrastructure becomes available in some areas, a stationary LPG can be used to form the network with dynamic LPGs and infrastructure. For example, infrastructure, such as roadway infrastructure, would enable roadway-vehicle communication or roadway-assisted communication.

[0148] In one embodiment, the RSU **100** can be a node within the LPG **115** and perform similar network functions as the moving-vehicles **110**. The RSU **100** can join an LPG **115** as either a Group Header (GH) **1300** node or a Group Node (GN) **1500**. A GH **1300** is a moving device or node within the LPG **115** that is designated to maintain and control the LPG **115** without any ordering of the nodes or any infrastructure. Typically, there is only one GH **1300** within an LPG **115**. All other nodes within the LPG **115** are a general node or a group node ("GN") **1500**. The GN **1500** joins the LPG **115** through the GH **1500**.

[0149] Each RSU **100** is capable of operating as a GH **1300** or GN **1500** in addition to a router and application server as described above. As such, each RSU **100** includes elements or means and networking protocols that allow the node to function or operate as a GH **1300** or GN **1500**, respectively. Therefore, even when an RSU **100** operates as either a GH **1300** or GN **1500**, all of the structural elements or means are present for both the GH **1300** and GN **1500**, but only specific elements function based upon the mode of operation. An RSU **100** will therefore include both hardware and software to provide the functionality of a GH **1300** or GN **1500**.

[0150] FIG. **11** illustrates a block diagram of basis elements of the RSU **100**. The RSU includes a memory section **1100**, a clock **1105**, a timer **1110**, a transmission/reception section **1120**, a control means **1125** and a power source **1130**. The memory section **1100** can be any type of memory including DRAM, SRAM or Flash. In a preferred embodiment, the short-term memory is cache. The memory section **1100** stores information regarding the LPG such as the GID **1705**, Group Header ID **1710**, the group listing, a predetermined maximum LPG size, the number of nodes in the LPG, and other types of control parameters.

[0151] The clock **1105** is used to maintain the timing for the RSU **100**. Specifically, the clock **1105** functions as an internal clock and is used as a basis for setting a timer **1110**. The timer **1110** is used to determine when to broadcast the various messages, i.e., determines a heartbeat interval (T) in the case of a GH **1300** or a reply message in the case of a GH **1300**. The control means **1125** or microprocessor controls all of the processes of the RSU **100** including generation of the message, routing, and timer. Additionally, the control means **1125** is also responsible for header resolution, which will be described later in detail. The transmission and reception section **1120** in combination with the control means **1125** is responsible for creating or generating the message from data, which is stored in the memory section **1100**.

[0152] The RSU **100** periodically transmits a beacon or heartbeat control packet **1700** to all moving vehicles **110** and other RSUs within the RSU's radio range. This period is a fixed interval. The value of the heartbeat interval (T) is selectable based on design or operational needs.

[0153] When an LPG **115** moves near an RSU **100**, a GH **1300** is elected based upon header resolution protocols. A moving vehicle that is GH **1300** of an LPG **115** sends out a heartbeat control packet **1700** on both the V-V and V-R channels. The RSU **100** acting as a GH **1300** as well only sends out its heartbeat on the V-R channel. When more than one GH **1300** sends a heartbeat control packet **1700**, e.g., GH **1300** from LPG **115** and RSU **100**, header resolution occurs. This is to avoid having multiple GHs **1300** within the same LPG **115**, since multiple GHs **1300** in the same LPG **115** will result in redundant (potentially even confusing) control signals being transmitted or broadcast within the LPG **115** and waste bandwidth and capacity. Header resolution functions to select one GH **1300** from at least two GHs.

[0154] FIG. **12** illustrates the header resolution method. At step **1200**, both the GH **1300** of the LPG **115** and the RSU **100** generate a header resolution message, upon receipt of each other's heartbeat control packet **1700**. This informs the RSU **100** and any GH **1300** to operate in header resolution mode. A

new GH is selected based upon a pre-determined selection criterion, as step **1210**. In a preferred embodiment, an RSU **100** will be selected as the new GH. The RSU **100** will then send a new heartbeat control packet **1700** to any node within radio range indicating that the RSU **100** is the GH **1300**, at step **1220**. The heartbeat control packet **1700** is once again sent via the V-R channel. The other nodes will join the LPG **115** via the RSU **100**, at step **1230**.

[0155] FIG. **13** illustrates the formation of an LPG **115** with an RSU **100** when a dynamic LPG comprising only moving vehicles **110** moves in proximity to the RSU **100**. In the dynamic LPG case, a LPG **115** can be formed outside the RSU **100** coverage area **1310**. A GH **1300** is selected initially from at least one moving vehicle **110**. When the LPG **115** moves inside the RSU radio range, the RSU **100** joins the LPG **115**. The RSU **100** initially acts as a GH **1300** and sends out a heartbeat control packet **1700**. Header resolution will occur between RSU **100** and GHA $\mathbf{1300}_A$. In the preferred embodiment, the RSU **100** has priority over GHA $\mathbf{1300}_A$ and would become the only GH **1300** for the LPG **115**.

[0156] When a LPG **115** moves in proximity to multiple RSUs **100**, e.g., linked RSUs **100** or RSU group **600**, only one RSU **100** will be the GH **1300**. The other RSUs become GN **1500**. Again header resolution occurs and selection RSU GH can be based on pre-defined priority or by some hash function of the RSU IP addresses or by the seniority of the GH **1300** (e.g., the ages of the GHs are compared and the GH with the highest age is selected as the winning GH).

[0157] One RSU **100** can be in more than one LPG **115**. Typically, each LPG **115** can have one RSU **100** in it which will be acting as the GH **1300**. One RSU **100** can also become GH **1300** for multiple LPGs **115** within its coverage. Other RSUs in the same LPG **115** could become GNs **1500**.

[0158] In an embodiment, multiple LPGs **115** having the same GH **1300**, i.e., RSU **100** can be kept as separate LPGs with the same RSU **100**. Alternatively, the multiple LPGs can merge together to form one larger LPG **115**. If the size of the LPG **115** exceeds the maximum size limit, the LPG splits into two separate LPGs.

[0159] In the stationary LPG case, LPGs **115** do not exist outside the radio range of the RSU **100**. Therefore, the LPG is defined by the RSU location. A moving vehicle would join the LPG as a GN via the RSU **100**. The RSU **100** would automatically be the GH. The RSU GH would be known apriori, discovered through other RSUs **110** or discovered through receipt of the RSU GH heartbeat control packet **1700**. With stationary LPGs, there is no need for header resolution between an RSU **100** and a moving vehicle since the moving vehicles **110** do not form LPGs themselves, and therefore, no GH, outside the RSU radio range.

[0160] FIG. **14** illustrates the formation of two stationary LPGs **115**. As depicted, RSU1 $\mathbf{100}_1$ and RSU1 $\mathbf{100}_2$ each have a predefined radio range. When moving vehicles 1 and 2 ($\mathbf{110}_1$ and $\mathbf{110}_2$) move within radio range, the vehicles ($\mathbf{110}_1$ and $\mathbf{110}_2$) join LPG1 $\mathbf{115}_1$ vian RSU1 $\mathbf{100}_1$. Similarly, moving vehicle 3 $\mathbf{110}_3$ joins LPG2 $\mathbf{115}_2$ vian RSU2 $\mathbf{100}_2$. Vehicle BN **1400** can hear multiple RSUs $\mathbf{100}_1$ and $\mathbf{100}_2$ and becomes a boundary node between the two LPGs. The boundary node acts as the inter-LPG relay point. In this case, vehicle BN **1400** can choose which LPG (LPG1 $\mathbf{115}_1$ and $\mathbf{115}_2$) to join.

[0161] In the case of a hybrid LPG, the RSU **100** demarks the stationary LPG location. The location of the RSU **100** is known and, therefore, the location of the stationary LPGs are known. When outside of the stationary LPG area, moving vehicles **110** form a dynamic LPG having a GH **1300** that is a moving vehicle **110**. When one or more nodes within the dynamic LPG come(s) into contact with an RSU **100**, the entire LPG joins the stationary LPG and, in the preferred embodiment, becomes GNs **1500** with the RSU **100** as the GH **1300**.

[0162] In one embodiment, intra-LPG communication will occur using the V-V channel between the dynamic LPG members. Inter-LPG communication will be between members of different dynamic LPGs and the RSU **100** using the V-R and V-V channels.

[0163] In another embodiment, the RSU **100** can join the LPG **115** as a GN **1500**. In this embodiment, header resolution between a moving vehicle GH **1300** and an RSU **100** will result in the vehicle GH **1300** being selected as the new GH for the LPG **115**.

[0164] FIG. **15** illustrates the formation of an LPG1 $\mathbf{115}_1$ with an RSU **100** when a dynamic LPG comprising only moving vehicles **110** moves in proximity to the RSU **100**. A GH **1300** is selected initially from at least one moving vehicle **110**. As depicted in FIG. **15**, the GH **1300** is GHA $\mathbf{1300}_A$. When the LPG **115** moves inside the RSU radio range, the RSU **100** joins the LPG **115** to form LPG1 $\mathbf{100}_1$. The GHA $\mathbf{1300}_A$ initially acts as a GH **1300** and sends out a heartbeat control packet **1700**. Header resolution will occur between RSU **100** and GHA $\mathbf{1300}_A$. In accordance with this embodiment, GHA $\mathbf{1300}_A$ has priority over RSU **100** and would become the only GH **1300** for the LPG1 $\mathbf{115}_1$. The dashed line in FIG. **15** represents the new LPG. RSU **100** would join the LPG1 $\mathbf{115}_1$ as RSU GN **1500**.

[0165] When LPG1 $\mathbf{115}_1$ comes into contact with other RSUs **100**, all RSUs **100** become GN **1500** of LPG1 $\mathbf{115}_1$. If the maximum size for the LPG **115** is reached, the LPG will split into more than one LPG. In the stationary LPG case, LPGs do not exist outside the radio range of the RSU **100**. Therefore, the LPG **115** is defined by the RSU location. A moving vehicle **110** would join the LPG **115** as a GH **1300**. The RSU **100** would be a GN **1500** within the LPG **115**. The RSU GH would be known apriori, discovered through other RSUs **110** or discovered through receipt of the RSU GH heartbeat control packet **1700**. With stationary LPGs, there is no need for header resolution between an RSU **100** and a moving vehicle **115**.

[0166] FIG. **16** illustrates the formation of two stationary LPGs **115** where the RSUs **100** become the GNs **1500**. As depicted, RSU1 $\mathbf{100}_1$ and RSU2 $\mathbf{100}_2$ each have a predefined radio range. Only the GH **1300** periodically sends out a heartbeat control packet **1700** to maintain the formation of an LPG **115**. GNs **1500** will set a timer to wait for the next heartbeat control packets **1700**. In this case, a moving-vehicle GH **1300** periodically sends out heartbeat control packet **1700**. When each RSU **100** (acting as a GN) receives the heartbeat control packet **1700** (i.e., within the radio range of the GH), it will set a timer to wait for the next heartbeat control packet **1700**. If the heartbeat control packet **1700** is not received within the HB period, then one of the GNs **1500** takes over the GH functions for the LPG **115**. When there is more than one GH **1300** within a local vicinity, a GH will hear heartbeat control packets **1700** for the same LPG **115** which it did not originate. In this case, only one GH **1300** should be selected to maintain the LPG **115** in the local vicinity. The header resolution procedure is used among competing GHs to select the winning GH.

[0167] After formation, the GH **1300**(moving vehicle) sends out the heartbeat control packet **1700** on the V-V and V-R channels. All GNs **1500** forward the heartbeat control packet **1700** on the V-V and V-R channels. If the heartbeat control packet **1700** is heard, a node, whether moving vehicle or RSU **100**, joins the LPG **115** via a join message.

[0168] In another embodiment, the RSU **100** can join a LPG **115** as a special relay node (RYN). The RSU **100** will join the LPG via the GH **1300**. The GH **1300** will add the RSU **100** to a membership list as a special node. The RYN, i.e., special relay node would only be used for vehicles in the LPG **115** as a backup path, or as a path for duplicate streams or multipath streams. In this case the RYN is part of the LPG **115** but does not relay all messages, or actively participle in all formation or organizational control messages. Thus, as LPGs move in and out of RSU **100** areas, the LPG structure can be maintained. A RYN can have a special status indicator showing its ability or willingness to be used as a relaying node. This special status indicator can be used to control the load on the RSU **100** and avoid major bottleneck. If the load on the RSU **100** is high, a bottleneck will occur. When the load on the RSU **100** is high, the RSU **100** will cause the special status indicator to indicate that the RSU **100** is not willing to be a relaying node. Therefore, the RSU **100** or RYN can remain in the routing table **2300** but may not be always active. In one embodiment, the RSU **100** or RYN can proactively broadcast the special status indicator to all nodes within its radio coverage range. The node will update the routing table **2300** to include the status of the RSU **100** or RYN, i.e., the routing table **2300** will include an additional entry for status, active or not.

[0169] In another embodiment of the invention, the status indicator can include a parameter for selectively determining which type of packets can be routed by the RSU **100** or RYN. For example, the RSU **100** might only be able to relay multicast packets but not unicast packets. The RSU **100** or RYN can proactively broadcast the status indicator with the type of packet information to all nodes within its radio coverage range. All nodes will update the routing table **2300** to include the type of information that the RSU **100** or RYN, i.e., the routing table **2300** will include an additional entry for type, unicast, multicast or broadcast. A node, whether it is an RSU **100** or moving vehicle **110**, whether acting as a GH **1300** or GN **1500** can be used to route a message. There are two main types of routing: unicasting and multi-casting.

Unicasting

[0170] The unicast routing protocol is based upon creating a routing table **2300** within each node. The routing table **2300** includes at least a destination and a next hop for messages or packets. All moving vehicles **110** in an LPG **115** perform routing functions and help other vehicles to communicate with either a single hop or a multi-hop. The intra-LPG routing table **2300** is constructed by exchanging control packets in a broadcasting mode using LPG formation messages. No additional control messages are needed for unicast routing. The same control packets that are used for LPG **115** formation is used for creating, maintaining and updating the routing table **2300** for the routing protocol. The routing table **2300** is used for intra-LPG routing. The LPG identifier is embedded in every control packet to prevent propagating foreign control packets to unnecessary nodes. All foreign control packets will be terminated or not relayed.

[0171] The control packet messages are the heartbeat (BB) from the GH **1300** and the membership report (MR) from GN **1500**. The heartbeat control packet **1700** defines the region of an LPG.

[0172] FIG. **17** illustrates an example of the format for the heartbeat control packet **1700**. The heartbeat control packet **1700** includes a unique identifier that includes both a LPG identifier or GID **1705** and the Group Header ID **1710**.

[0173] A GID **1705** and the Group Header ID **1710** identify each LPG **115**. There are several possible formats for the GID **1705**. In an embodiment, the GID **1705** can be an identification number randomly selected for the LPG **115**. Alternatively, the GID **1705** can be an identification number assigned based upon an order of formation of the LPG. For example, the first LPG can have the GID **1705** of LPG1, the second would be LPG2 and so on. However, as the GH **1300** changes, the GID **1705** would change as well, and would result in a node not being able to tell if its LPG changes or just the ID for the LPG **115**. On the other hand, the GID **1705** can be fixed to the original ID when a GH leaves. However, this might lead to GID **1705** duplication when a single LPG splits. Two or more groups will have the same GID **1705**. In an embodiment the GID **1705** is encoded based upon both LPG ID and GH ID numbers to uniquely identify the LPG **115**.

[0174] A GH **1300** is given a Group Header ID **1710**. Initially, the GED **1705** is tied to the Group Header ID **1710**. Therefore, the Group Header ID **1710** initially is used as a portion of the GED **1705**, but as the GH changes, the GM **1705** changes to include the new Group Header ID **1710**. Each GH is assigned a Group Header ID **1710**. The Group Header ID **1710** is assigned based upon a (public or private) IP address. As depicted in FIG. **17**, the Group Header ID **1710** is an IPv6 IP address. In another embodiment, the Group Header ID **1710** can be an IPv4 address.

[0175] The heartbeat control packet **1700** also includes a sequence number (Seq. No.) **1715**. The Seq. No. **1715** is used to track the order of the heartbeat control packet **1700** to determine if a received heartbeat control packet **1700** is new or fresh. A GN **1500** remembers the Seq. No **1715** of the received heartbeat control packet **1700**. A new or fresh heartbeat control packet **1700** is indicated by a first heartbeat control packet **1700** with the next Seq. No. **1715**. The sequence number **1715** is also used to determine which heartbeat control packet **1700** should be relayed (to the next hop nodes), i.e., a first come relay only (FCRO) strategy can be used. Only new (i.e., fresh) heartbeat control packets **1700** should be relayed. A node remembers the previous sequence number and then compares the incoming sequence number of the heartbeat control packet **1700** to determine if the heartbeat control packet **1700** is new or fresh. If the Seq. No. **1715** of the heartbeat control packet **1700** with the proper GID **1705** is greater than the currently stored sequence number, it is a new or fresh heartbeat control packet **1700** and is then relayed when FCRO is used. The sequence number previously stored in the GN will be discarded and replaced with the new Seq. No. **1715**.

[0176] The heartbeat control packet **1700** further includes information regarding the heartbeat period (HB period) **1720**. This period is a fixed interval (T). The value of the interval (T) is selectable based on design or operational needs. The FIB period **1720** indicates to all GNs **1500** when the next heartbeat control packet **1700** will be broadcast. If a GN **1500** does not receive a heartbeat control packet **1700** within the HB period **1720**, the GN **1500** will transmit a new heartbeat control

packet **1700** such that a heartbeat control packet **1700** is continuously transmitted. If the original GH **1300** is still in the LPG **115**, then header resolution will occur. To reduce the control overhead, the GH **13** can adjust the HB period **1720**. The adjustment can be based upon, size of the LPG, location, load, speed and number of nodes within the LPG.

[0177] The heartbeat control packet **1700** will also include the type of heartbeat control packet **1700**, e.g., heartbeat with complete group list, incremental group list or no group list. In one embodiment, the heartbeat control packet **1700** will include a complete group list in every packet. Using a complete group list is the most accurate way to control routing and maintain a correct list of group members; however, there is a significant amount of bandwidth needed for the heartbeat control packet **1700** with a complete group. The heartbeat interval (T) can be adjusted to reduce the control overhead. In another embodiment, every n-th heartbeat control packet **1700** will include a complete group list. For example, each third heartbeat control packet **1700** includes a complete group list. This will reduce the bandwidth for the average heartbeat control packet **1700**. However, since most of the nodes within the LPG **115** are moving at a rapid pace, the received group list might be stale. In other words, by the time the new group list is received by a node, several members of the group might be in another LPG **115**. In another embodiment, a progressive or incremental group list can be distributed. A group list will only be distributed when there is a change in the membership in the group list. Progressive or incremental group lists may also suffer from a stale membership list. Alternatively, the type of heartbeat control package **1700** can be a hybrid group list update. A progressive group list can be included in the heartbeat control packets **1700** when there is a change in membership and additionally a complete group list can be included every n-th heartbeat control packet **1700**. ToHb **1725** will indicate the type of heartbeat control packet **1700**. The type of heartbeat control packets **1700** is influenced by the topology change rate of the LPG **115** and frequency of broadcast of the heartbeat control packet **1700**. As the topology change rate of an LPG **115** increases, there is a greater need for a complete group list being included in all heartbeat control packets **1700**. As the frequency of broadcast of the heartbeat control packet **1700** increases, the need for a complete group lists being included in all heartbeat control packets **1700** decreases.

[0178] The heartbeat control packet **1700** will include the hop count (HC) **1730** from the GH. Initially, the HC **1730** is set at a predetermined value, e.g., **1**. Every time the heartbeat control packet **1700** is relayed by a node, the relay node increases the HC **1730** value by 1, i.e., HC=HC+1. The HC value can be used to limit the LPG size, to indicate the staleness of the information within the heartbeat control packet **1700** and to control routing of the control packets to reduce overhead. For each LPG, there is a maximum hop count for routing, e.g. 10. Once the HC **1730** is incremented to the maximum hop count, the control packet, e.g., the heartbeat control packet **1700** will not be relayed.

[0179] The usage of a maximum hop count, HC **1730** and Seq. No. **1715** prevent the infinite duplications of flooding of the control packet within the LPG **115**. Flooding is a packet delivery method where packets are delivered using all nodes within a group. Flooding generates an unnecessary number of duplicate relays when the network density is high. Each and every node within a network participates in the flooding packet relay and each node relays these packets onto all of its links.

[0180] The hop count can also be used for a relay strategy. In an embodiment, the heartbeat control packet **1700** can be relayed if the heartbeat control packet **1700** has the shortest hop count. This method will guarantee the correct hop count, however, there will be a waiting delay. Since the node has to determine the shortest hop count for the heartbeat control packet **1700**, the node has to wait until the node receives the heartbeat control packet **1700** from all upstream nodes before the node relays the heartbeat control packet **1700**. Accordingly, a combined relay strategy can be implemented using both the shortest hop count and first come relay only strategy set forth above. A heartbeat control packet **1700** will be relayed using the first come relay only strategy until a node receives a shorter hop heartbeat control packet **1700**. When a node A forwards the heartbeat control packet **1700** it will include its ID information in the message so that next hop nodes know who relayed the heartbeat control packet **1700**. The node forwarding the packet (node A) also then becomes the MR relay node (to send the MR **1800** towards the GH **1300**) for next hop nodes, which received the heartbeat control packet **1700** from node A.

[0181] As set forth above, a heartbeat control packet **1700** can also include a Group List **1735**. A Group List **1735** can include information regarding the members of the LPG **115**, such as the number of members in the LPG **115**, IP addresses for each number, the hop count from the GH, and a classification.

[0182] A classification can be a code that references a relative direction from the GH node, e.g., uplink, downlink and peer. A peer classification indicates that a node is within the same wireless coverage area from the GH, i.e., all of the peer nodes have the same hop count from the GH. Upstream nodes are determined by the heartbeat control packet **1700**. Downstream nodes are determined based upon a membership report (MR). Upstream transmission represents communication towards the GH **1300** and downstream transmission represents communication away from the GH **1300**. This classification is a relative term. Each GN **1500** can classify its neighbors into three different classes. If the membership report of another GN has 1 less hop count (HC) than the HC of the GN, the GN is an upstream node. If the HC **1700** is the same with its own HC **1700**, the GN **1500** is a peer. If the HC **1700** is 1 greater than its own HC **1700**, the GN is a downstream node.

[0183] FIG. **18** illustrates a membership report (MR) **1800**. An MR **1800** is a control packet broadcast by the GN **1500** for receipt by the GH **1300**. The MR **1800** includes collectable routing information such as a membership list, downstream node identifications and next hop for downstream nodes. An MR **1800** includes some of the same information as the heartbeat control packet **1700**: the GID **1705** and the Group Header Id **1710**. The MR **1800** will also include an MR Seq. No **1805**. The MR Seq. No. is similar to the Seq. No for the heartbeat control packet **1700** and is used to maintain order of the MR's. The MR. Seq. No. **1805** is the MR order for one particular node. Typically, the MR Seq. No. **1805** has the same value with the Seq. No. **1715** of the heartbeat control packet **1700** that triggered the MR **1800**.

[0184] The Node ID **1810** of the originating node is also included in the MR **1800**, i.e., node that generated the MR **1800**.

[0185] The MR **1800** also includes Next-hop relay ID **1815**. The Next-hop relay ID **1815** is relay instructions for the MR **1800** towards the GH **1300**. The next hop information is determined directly from the received heartbeat control packet **1700**. When a node receives a new or fresh heartbeat control packet **1700**, it recovers the previous relaying node's identification from the IP layer and MAC layer before any packet processing. The previous relaying node's identification is stored in memory and used as the Next-hop relay ID **1815** for the MR **1800**. When a node forwards a heartbeat control packet **1700**, the node includes its ID in the packet. The receiving next hop node will store this ID when the node receives a new or fresh heartbeat control packet **1700**, as the next hop relay ID to reach the GH **1300**. A new or fresh heartbeat control packet **1700** is the one which has a newer sequence number with lowest HC.

[0186] The MR **1800** also includes a "Type of MR indicator" ToMR **1820**. There are two types of MRs **1800**: a single member and aggregated multiple member report. A single member MR only includes an MR **1800** from the originating node. An aggregated multiple member report includes the MR **1800** of more than one node. The aggregate report can be used to reduce the overhead and bandwidth needed for control packets. One MR **1800** is sent containing multiple MRs.

[0187] Additionally, the MR **1800** can include a Hop count from the GH (HC_{GH}) **1825**. (HC_{GH}) **1825** is the HC value from the GH **1300** to the originating node of the MR **1800**. In another embodiment, the MR **1800** can include an accumulated membership list **1830** and other additional information **1135**. The accumulated membership list **1830** will include the IP address of the member of the LPG, number of members and corresponding hop counts.

[0188] The MR **1800** can be delivered or relayed to the GH **1300** using a reverse path or reverse flooding method. A reverse path method relays the MR **1800** towards the GH **1300** using the same path that was used for relaying the heartbeat control packet **1700**. When an MR **1800** is relayed, the relaying node replaces the NEXT-Hop Relay **1815** with its next hop towards the GH. Only the node that has the corresponding ID relays the MR **1800** packet. This method assumes symmetry in transmission. If asymmetry links are present, the Reverse flooding method is used, i.e., every node between the originating node and the GH **1300** relays the MR **1800**.

[0189] Each node uses both the heartbeat control packet **1700** and the MR **1800** to create a routing table **2300** which can be used as a forwarding table for LPG based routing. In the preferred embodiment, each heartbeat control packet **1700** includes a complete group list and is responded to, with MR **1800**, by all GNs **1500** within the LPG **115**. The heartbeat control packet **1700** is relayed using a first come relay only method and the MR **1800** is relayed towards the GH **1300** using the reverse path method as a single MR.

[0190] FIG. **19** illustrates the LPG based routing method for a unicast message. Initially, each node is idle step **1900**. When a packet arrives, step **1901**, the node determines whether the packet is a heartbeat control packet **1700** or an MR **1800**, at step **1902**. Depending on the type of control packet, the node performs special packet processing. If the control packet is a heartbeat control packet **1700**, the node processes the packet starting with step **1903**. The node determines if the packet is native, step **1903**. A packet is native if the packet is for the same LPG **115**, i.e., the packet has the same GID **1705**. The node will compare the GID **1705** with the group identification stored in memory. If the GID **1705** does not match the identification stored in memory, the node will initiate Foreign HB handling, at step **1904**. Typically, foreign HB handling will result in the node ignoring the packet. If the GID matches the identification stored in memory, the node will then determine if the heartbeat control packet **1700** is in sequence. The node will compare the Seq. No. **1715** with the sequence number in memory. If the Seq. No. **1715** is less than the value stored in memory, the node will ignore the packet, at step **1905**. If the Seq. No. **1715** is greater than the value stored in memory, the heartbeat control packet **1700** is in sequence and the node will then determine if the heartbeat control packet **1700** is new, at step **1906** by comparing the current sequence number to the last stored sequence number. If the node determines that the message is not new, only the routing entry of the sender is updated, step **1907**. The heartbeat control packet **1700** is not relayed. If the node determines that the message is new, then depending on whether the node is a GH **1300** or GN **1500**, the node will perform one of two functions. The determination of the node type is performed at step **1908**. If the node is a GH **1300**, then the node will update the routing entry of the sender, at step **1909**. The heartbeat control packet **1700** is not relayed and the node will become idle **1900**. However, if the node is a GN **1500**, then the node will update the routing table **2300** for all group member entries and relay the heartbeat control packet **1700**, at step **1910**. Updating the routing table **2300** will be described later in greater detail.

[0191] If the control packet is an MR **1800** the node processes the packet starting with step **1911**. The node determines if the packet is native, step **1911**. The node will compare the GID **1705** with the group identification stored in memory. If the GID does not match the identification stored in memory, the node will initiate Foreign MR handling, at step **1912**. If the GID matches the identification stored in memory, the node will then determine if the node that sent that MR **1800** is a member of the LPG **115**. The node will compare the Node ID **1810** with a membership list stored in memory. If there is no match, then the node will only relay the MR **1800**, at step **1914**. The MR will be relayed so that a new group node can join the LPG without having to wait for a complete heartbeat cycle. If the node that sent the MR **1800** is not listed in the join list, the node can be considered a joining node. There are no routing entries in the routing table **2300** for a joining node. In one embodiment, the node can forward the MR **1800** towards the GH **1300**. The node will not update any entry in the routing table **2300**. In another embodiment, the node can add the originating node (of the MR) to the destination list, i.e., reserve a routing entry for the originating node. The node can save the relaying node information as the next hop and when the new heartbeat control packet **1700** is received with the originating node as a member, the node can automatically update the routing table **2300** with the information already stored in memory. When the new routing entry is finalized, the originating node can be classified as a downstream node.

[0192] If there is a match, then the node will determine if the MR **1800** is in sequence, at step **1915**. The node will compare the MR Seq. No **1805** with the sequence number in memory. If the MR Seq. No **1805** is less than the value stored in memory, the node will ignore the packet and become idle **1900**. If the MR Seq. No **1805** is greater than or equal to the value stored in memory, the MR **1800** is in sequence and the node will then determine if the MR **1800** is new, at step **1916**

by checking whether the node has already received the MR **1800** from the originator with the current sequence number (by comparing with the last stored sequence number). If the node determines that the message is not new, only the routing entry of the sender is updated, step **1917**. The MR **1800** is not relayed. If the node determines that the message is new, then depending on whether the node is a GH **1300** or GN **1500**, the node will perform one of two functions. The determination of the node type is performed a step **1918**. If the node is a GH **1300**, then the node will update the routing entries of the immediate sender and originator, at step **1919**. The MR **1800** is not relayed and the node will become idle **1900**. However, if the node is a GN **1500**, then the node will update the routing table **2300** for sender and originator and relay the MR **1800**, at step **1920**. Updating the routing table **2300** will be described later in greater detail.

[0193] FIGS. **20-21** illustrate the method of updating the routing table **2300** when the node receives a heartbeat control packet **1700**. If the node receives a fresh heartbeat control packet **1700**, at step **2000**, then the routing table **2300** is updated, at step **2005**. When a fresh heartbeat control packet **1700** is received, a node can determine where the packet came from, i.e., immediate relay node. The relay node is the next hop for the GH. The node updates the next hop for GH value, at step **2100**. Next, the node will add or update the destination list, at step **2105**. The destination list is a list of all members of the LPG **115**. The process includes removing routing destination for ex-members of the group and inserting routing entries for new members. The node will then set the next hop for all destinations as the GH **1300**, at step **2110**. The GH **1300** is initially the next hop for all destinations. The next hop will change as more information regarding the LPG **115** becomes available. The node will then update the freshness indicators for the information at step **2010**. Specifically, the node will reset the timer for keeping track of the heartbeat control packets. The node will also store the sequence number in memory, and discard stale information. The node will then increment the hop count by 1, at step **2015**. Additionally, before the node relays the heartbeat control packet **1700**, the node will insert its own IP address into the packet as the next hop to GH, at step **2020**. The node relays the message after the packet processing described in steps **2000-2020**, at step **2025**.

[0194] If the node receives a duplicate heartbeat control packet **1700**, at step **2000**, only the immediate senders' entries in the routing table **2300** are updated, at step **2030**. The update includes the update process described in FIG. **21** at steps **2100-2110**. Additionally, the freshness indicators are also updated at step **2035**.

[0195] Whenever a fresh MR **1800** is received, the node modifies the routing table **2300** using information from the MR **1800**. The MR **1800** provides additional routing information resulting in better routing route. Each node can hear the MR from all downstream, one-hop-away upstream or peer nodes. For downstream and upstream nodes, the node can hear the MR **1800** for all nodes within one hop. The routing table **2300** is updated by setting the next-hop for the corresponding routing entry to the relay node of the MR. The node checks the routing entry for the originator of the MR. If the next-hop is not the relay node, the entry is modified. Additionally, the immediate sender's routing entry is updated and a direct connect, i.e., next hop for the destination, is the destination. The freshness indicator for the routing entry which is associated with the MR **1800** is updated and the sequence number for the originating node that sends the MR **1800** is updated. The routing table **2300** is only complete after both a heartbeat control packet **1700** and an MR **1800** is received. Accordingly, the routing table **2300** is only used for forwarding messages after the table is complete. During the update process, the prior routing table **2300** is used as the forwarding table.

[0196] The forwarding table is the routing information used for packet forwarding. After the construction of the internal routing table **2300** is complete, the node resets the forwarding table to enable packet forwarding using the new routing data.

[0197] FIG. **22** illustrates a finite state machine for unicast IP packet forwarding. The initial state for a node is idle **2200**. When a unicast packet arrives, the node determines if the final destination of the packet is that node, state **2205**. If the final destination matches, i.e., destination address of the packet matches the nodes IP address, the node consumes the packet, state **2210**. The IP packet is processed. If the packet is not destined for the node, the node forwards the packet, state **2215**. Specifically, the node first updates the routing tables **2300** with information from the IP packet and then looks up the destination address in the forwarding table which forwards the packet to the next hop neighbor listed in the forwarding table.

[0198] FIG. **23** illustrates an example of the format of the internal routing table **2300**. The IRT **2300** is a database stored in memory. The first column of the IRT **2300** lists all of the routable entries or destinations in the LPG. The second column lists the next hop for each destination. In another embodiment, the IRT **2300** can include a sequence number or time stamp to maintain or indicate the freshness of the information and a node classification, i.e., upstream, peer, downstream, joining.

Multicasting

[0199] In another embodiment, the LPG network is capable of supporting multicast message functionality. In unicasting, because a sending node (e.g., the witness of the accident) sends or directs a message to one particular receiver, multiple messages are needed to send the same information to number receivers. This results in the consumption of a large network bandwidth and message delays. For example, in unicasting, if there are six different recipients for a particular message, six different and duplicate messages are transmitted on the link between the sender and its neighboring nodes, i.e., recipients. The network is used six times for the transmission of the same message and the recipient of the sender's last transmission needs to wait longer. In addition, the sender must know each recipient in advance, i.e., IP addresses for each recipient.

[0200] In multicast transmission, the sender does not generate duplicate copies of the message; it sends one message to all the recipients. The network bandwidth is significantly saved with multicasting. For example, if a sender needs to send one message to six one-hop neighboring receivers, the sender will produce one multicast message to all six receivers. The total bandwidth used will be reduced to ⅙. Additionally, the nodes do not need to be completely organized beforehand, i.e., each node does not need to know every other node's address, only needs to know the multicast group **2400** identification or IP address for the multicast group **2400**. Every node within the multicast group **2400** will receive the multicast message. Further, the multicasting tree or mesh described below can support all multicast members in the multicast group to be source nodes and communicate with each other.

There is no need to create separate multicast trees, one tree for each source node to communicate with the other nodes.

[0201] Unlike unicasting, multicasting deals with multiple sources and receivers per multicast session. For example, an RSU **100** attempts to disseminate a piece of urgent information to a plurality of school buses. In order to deliver the information promptly, the paths among the school buses involved must be established prior to the transmission of the message. In multicasting, the routing path among multicast members is based upon a multicast tree. A multicast tree or mesh is built using a proactive multicast routing method and can account for the dynamic changes in the ad hoc network due to the mobility of most of the nodes. In accordance with the invention, the trees or meshes are adjusted quickly to avoid the multicast message being delayed and lost.

[0202] In the ad-hoc network in accordance with the invention, participants are typically connected by either a single hop, i.e., direct neighbors or multi-hop. A multicast group **2400** is created from multicast members, which are called leaf nodes. Any node between each leaf can be selected as multicast forwarding nodes (FN) **2410** and used to forward multicast packets to the associated multicast members.

[0203] FIG. **24** illustrates an example of a multicast group **2400**. The multicast group **2400** includes three multicast members LN1 $\mathbf{2405}_1$, LN2 $\mathbf{2405}_2$, and LN3 $\mathbf{2405}_3$. The multicast group **2400** also includes forward nodes FN1 $\mathbf{2010}_1$, and FN2 $\mathbf{2010}_2$. In this example, the group header GH **1300** is also a forwarding node **2410**. The remaining nodes depicted in FIG. **24**, are group nodes **1500**. All nodes in a LPG **115** are capable of being either leaf node **2405** or forwarding nodes **2410**, or both. The multicasting tree is created based upon similar control and formation packets, which have been already described above. The multicasting tree leverages information included in the control packets without a significant increase in bandwidth and extra information in the control packets. The control packets include the heartbeat control packets **1700** and MR **1800**. The multicast tree provides paths from any source, i.e., leaf to all the receivers, i.e., other leafs.

[0204] To establish a multicast session, nodes interested in a multicast session launch a multicast application program corresponding to the multicast session. The application program is stored in memory. Accordingly, the nodes become leaf nodes and release signals (MRs **1800**) indicating their interest to join the session to the LPG **115**. These signals initiate the generation of a multicast tree for the multicast session.

[0205] Upon receipt of the initiating signal, a node becomes an FN **2410** for the multicast session. The FN **2410** can accept and forward multicast packets associated with the multicast session.

[0206] With reference to FIG. **24**, LN1-3 $\mathbf{2405}_{1\text{-}3}$ join a multicast session (e.g., a weather service session) and become leaf nodes **2405** by launching the multicast application program associated with the multicast session. FN1 $\mathbf{2410}_1$, GH **1300**, LN2 $\mathbf{2405}_2$, and FN2 $\mathbf{2410}_2$, are selected as FNs **2410** to form a multicast tree for the multicast session, which spans all the leaf nodes LN1-3 $\mathbf{2405}_{1\text{-}3}$.

[0207] In accordance with the invention, the multicast tree can be created in two ways. FIG. **25** illustrates one method for forming the multicast tree according to an embodiment of the invention. In this embodiment, the GH controls the creation of the multicast tree. At step **2500**, the GH must assign a classification for each node within the LPG **115**. The classification is based upon whether a node is upstream or downstream from the GH **1300**. If a node is upstream from the GH **1300**, a first classification is assigned to the node, and if a node is downstream from the GH **1300**, a second classification is assigned to the node. For example, one classification could be blue and blue would be assigned to all the nodes located on the one side of the GH **1300**, and the other classification could be red and red would be assigned to all the nodes on the other side of the GH **1300**. The GH **1300** will broadcast a heartbeat control packet **1700** including the classification to all nodes within the LPG **115**. At step **2505**, every node determines the hop counts from the GH. Hop count from the GH is determined directly from the heartbeat control packet **1700**. At step **2510**, the GH **1300** will collect information regarding the leaf nodes **2405**. This information is determined directly from the membership report. At step **2515**, the GH **1300** defines the scope of the multicast session that the leaf nodes **2405** are involved in, based on the information collected. Specifically, the GH **1300** processes all the MRs **1800**, and finds out which nodes are the leaf nodes **2405** (i.e., members of a multicast session), their classifications and hop distances. For example, red and 4 hop distance, blue and 1 hop. The scope limits the range of multicast forwarding. Relay nodes within the scope defined by the GH **1300** for the multicast session become FNs **2410**. The set of FNs **2410** represents a multicast mesh.

[0208] FIG. **26** illustrates an example of the multicast group **2400** in accordance with this embodiment. The shaded region represents the scope of the multicast group **2400**. In this example, leaf node LN1 $\mathbf{2405}_1$ is on one side of the GH $\mathbf{1300}_m$ and leaf nodes LN2 $\mathbf{2405}_2$ and LN3 $\mathbf{2405}_3$ are on the other side. The classification of LN1 $\mathbf{2405}_1$ would be a first classification, i.e., red and the classification of leaf nodes LN2 $\mathbf{2405}_2$ and LN3 $\mathbf{2405}_3$ would be a second classification, i.e., blue. On the red side, the furthest leaf node is three hops away from GH **1300** and on the blue side, the furthest leaf node is 2 hops away. Therefore, the scope of the multicast group **2400** is from 3 hops red to 2 hops blue. This scope information is advertised to the relay nodes through the heartbeat control packet **1700**. Once a relay node receives the scope information, it determines whether it become an FN **2410** or not. As shown in FIG. **26**, those relay nodes within the range from 3 hops red to 2 hops blue become the FNs **2410** of the multicast session. Leaf node LN2 $\mathbf{2405}_2$ is both a leaf node and an FN **2410**. A multicast message is routed using the shortest paths between members.

[0209] As stated above, the multicast tree is created based upon the heartbeat control packets **1700** and the MRs **1800**. GH **1300** broadcasts a heartbeat control packet, at predefined intervals. A heartbeat control packet **1700** is delivered to all the nodes in a LPG **115**. In response to the heartbeat control packet **1700**, each node sends an MR **1800** to the GH **1300**. The nodes that relay an MR **1800** toward the GH **1300** are relay nodes (RNs). For multicasting, the contents of heartbeat control packet **1700** and MR **1800** are updated to include multicast-related information. Specifically, classification information and multicast scope information are added in a heartbeat control packet **1700** and member's classification and hop distance for a GH are included in an MR **1800**. FIGS. **27** and **28** are examples of the heartbeat control packet **1700** and MR **1800** used to create the multicast tree.

[0210] Upon receiving a heartbeat control packet **1700**, a node obtains its classification, its hop distance, as well as the multicast scope information. Based on scope information in a heartbeat control packet **1700**, relay nodes determine if they

need to become FNs **2410**. Specifically, the relay nodes within the scope become FNs **2410**. All FN **2410** for a multicast session are reflected in a multicast forwarding entry for that multicast session as an entry in a Multicast Forwarding Table (MFT) **3100**. The MFT **3100** reflects the structure for the multicast tree. The MFT **3100** is updated every heartbeat cycle, i.e., after every heartbeat control packet **1700** and MR **1800**. In other words, the multicast tree and MFT **3100** is updated to reflect nodes joining and leaving as well as mobility of the multicast member.

[0211] FIG. **29** illustrates the LPG based routing method for a multicast messaging in accordance with this embodiment of the invention. Initially, each node is idle **2900**. When a packet arrives **2901**, the node determines whether the packet is a heartbeat control packet **1700** or an MR **1800**. Depending on the type of control packet, the node performs special packet processing. The node determines the type of control packet as step **2902**. If the control packet is a heartbeat control packet **1700** the node processes the packet starting with step **2903**. The node determines if the packet is native, step **2903**. A packet is native if the packet is for the same LPG **115**, i.e., the packet has the same GID **1705**. The node will compare the GID with the group identification stored in memory. If the GID does not match the identification stored in memory, the node will initiate Foreign heartbeat control packet **1700** handling, at step **2904**. Typically, foreign HB handling will result in the node ignoring the packet. If the GID matches the identification stored in memory, the node will then determine if the heartbeat control packet **1700** is in sequence. The node will compare the Seq. No. with the sequence number in memory. If the Seq. No. is less than the value stored in memory, the node will ignore the packet, at step **2905**. If the Seq. No. is greater than and equal to the value stored in memory, the heartbeat control packet **1700** is in sequence and the node will then determine if the heartbeat control packet **1700** is new, at step **2906** (i.e., sequence number greater than the last stored sequence number). If the node determines that the message is not new, the node will ignore the message and become idle, i.e., return to step **2900**. If the heartbeat control packet **1700** is new, then the node will determine if the node is a relaying node (RN), at step **2907**. If the node is not an RN, then the node will update information in memory such as hop count from GH and classification, at step **2908**. On the other hand, if the node is an RN, the node will determine if the node is within the scope, at step **2909**. The GH **1300** defines the scope based on the received MRs **1800**. The GH **1300** becomes an FN **2410** if the GH is located within the defined scope. If the RN is within the scope, then the RN becomes an FN and adds the identification of the multicast session, i.e., class D multicast IP address to the MFT **3100**, at step **2910**. Additionally, the node, now an FN **2410** updates the hop count information and classification, if necessary. If the RN is not within the scope, then the RN will update information in memory such as hop count from GH and classification, at step **2909**.

[0212] If the control packet is an MR **1800** the node processes the packet starting with step **2911**. The node determines if the packet is native, step **2911**. The node will compare the GID **1705** with the group identification stored in memory. If the GID does not match the identification stored in memory, the node will initiate Foreign MR handling, at step **2912**. If the packet is native, the node will then determine if the MR **1800** is in sequence, at step **2913**. The node will compare the Seq. No. with the sequence number in memory. If the Seq. No. is less than the value stored in memory, the node will ignore the packet, at step **2913**. If the Seq. No. is greater than or equal to the value stored in memory, i.e., the MR **1800** is in sequence, then the node will decide if the node is a GH **1300**, at step **2914**. If the node is a GH **1300**, the node will collect the information contained in the MRs **1800** and the scope, at step **2915**. Specifically, the MR **1800** includes classification information, hop count to GH information and multicast group **2400** membership information. Using this information, prior to transmitting a heartbeat control packet **1700**, the GH **1300** can adjust the scope of the multicast group **2400**, if necessary. Additionally, the GH **1300** will modify the MFT **3100**, i.e., add itself as an FN **2410**. Lastly, the GH **1300** will change the classification of nodes, if necessary, to account for mobility.

[0213] On the other hand, if the node is not a GH, the node will then determine if the node is an RN, at step **2916**. If the own node's ID of the node is equal to the Next-Hop Relay ID (e.g., IP address) in the MR **1800**, the node is the RN for the MR **1800**. Every node maintains its node status such as GH, RN, and FN. If the node is not an RN, then the node will just update the classification information, at step **2917**. If the node is an RN, the node will set its node status as RN and update the classification information, at step **2918**.

[0214] FIGS. **30**A and **30**B illustrate a functional node state transition chart for both a GH **1300** (FIG. **30**A) and for an RN (FIG. **30**B). GH **1300** can be in either an FN **2410** or not, i.e., Non-FN **3000** or FN **3010** state. If GH **1300** is positioned outside of the scope of a multicast group **2400**, it will be in a Non-FN state **3000** for the multicast group **2400** via transition **3005**. If the GH **1300** is within the scope of the multicast group **2400**, the GH **1300** will transition to an FN **2410** state **3010** via transition **3015**. Once in FN state **3010**, the FN **2410** will set an FN timer. The FN timer is used to control the time that a node is an FN **2410**. The timer is set to a predefined period of time. While in an FN state **3010**, a node FN only moves to a Non-FN state when the FN timer expires, through transition **3025**.

[0215] A node other than a GH can be in one of four states. A regular node (i.e., both non-RN and non-FN) **3030**, RN state **3040**, FN state **3050**, and FN/RN state (both FN and RN) **3060**. The Received Valid MR in FIG. **30**B means that the received MR **1800** is destined for the node. When a regular node (state **3030**) receives an MR **1800**, the node transitions to an RN (state **3040**) via transition **3035**. Once an RN (state **3040**), upon receipt of a heartbeat control packet **1700**, the RN will either transition to an FN **2410** (state **3050**) via **3055** or back to a regular node (state **3030**) via transition **3040**. If the RN is within the defined scope, the RN will become an FN (state **3050**) via transition **3055**. However, if the RN **3040** (state **3040**) is not within the scope, the RN will transition to regular node state **3030**. AN FN (state **3050**) will change its state back to a regular node when its timer expires, through transition **3065**. AN FN **2410** can be both an RN and an FN. If the FN (state **3050**) receives a different MR **1800** then the FN **2410** will transition to state **3060** via transition **3075** to become both an RN/FN (state **3060**). The node will remain in state **3060** as both an FN/RN until it receives a new heartbeat control packet **1700** (transition **3085**).

[0216] FIG. **31** illustrates an example of the MFT **3100** used for multicast routing in accordance with the invention. An entry of MFT **3100** consists of a multicast group address (e.g., class D IP address) and outgoing interfaces. If a multicast group **2400** is listed in the MFT **3100** for a node, the node

will be an FN **2410** for that multicast group **2400**. Each FN **2410** stores the MFT **3100** in memory. Accordingly, upon receipt of the multicast packets from the sources or the neighboring FNs **2410**, it forwards the multicast packets

[0217] For a non GH, the MFT **3100** is only updated based upon the heartbeat control packet **1700**, the multicast group **2400** address for the multicast session is added as an entry of the MFT **3100** and the affiliated timer (i.e., FN timer for that entry) starts (or restarts in case of renewing the entry). If the timer expires (i.e., renewing doesn't take place), the entry will be removed from the MFT **3100**. The GH **1300** updates the MFT **3100** when it receives the MR **1800**.

[0218] The MFT **3100** is updated each heartbeat control cycle. A heartbeat control cycle includes the time for both one set of heartbeat control packet **1700** and MR **1800**. Due to the fact that the nodes are mobile, the set of relay nodes may change for each heartbeat control cycle. Since, in this embodiment, multicast FNs **2410** are a subset of RNs, and the RNs can change frequently, a multicast mesh and MFT **3100** must be updated every heartbeat control cycle. The change of the multicast membership is reflected on the mesh and MFT **3100** at the next HBC (heart beat cycle).

[0219] AN FN timer is associated with each entry in MFT **3100**. The period of time will be a multiple of the heartbeat interval or just a little greater than the heartbeat interval. The FN timer will renew if the FN **2410** is still within the scope. The FN timer will expire if the node does not receive a valid MR **1800** and a heartbeat control packet **1700**, which indicates that the node is within the scope within the predefined period of time. If the FM timer for an entry listed in MFT **3100** expires, the entry will be removed from MFT, i.e., the node becomes a NON-FN for the multicast session represented by that entry.

[0220] The mobility of a leaf node **2405** is detected through MR **1800** and heartbeat control packet **1700** transmission. Approximately two HBCs (heartbeat cycles?) are required to detect the movement of a leaf node **2405** and update the mesh, i.e., MFT **3100**.

[0221] In second multicast embodiment, GH **1300** will not define the scope of the multicast group **2400**. In this embodiment, all RNs between a multicast member and a GH **1300** become FNs **2410**. In this embodiment, the formation of a multicast group **2400** is quicker since the GH **1300** does not define the scope. A multicast member indicates the multicast membership information in its MR **1800**. The member sets Leaf Node status in the MR **1800** as the multicast status. Upon receiving the MRs **1800**, the RNs become FNs **2410** for the associated multicast groups **2400**. AN FN **2410** sets FN status in its own MR **1800**. According to this multicast embodiment, there is no need for any additional information to be added to the heartbeat control packet **1700**. The packet can be the same as depicted in FIG. **17**. The MR **1800** will be similar to the MR **1800** depicted in FIG. **18**, however, information regarding multicast membership, e.g., engaging multicast group **2400***s*, and the nodes status, i.e., FN **2410** or leaf node **2405** will be added.

[0222] FIG. **32** illustrates an example of the modified MR **1800** in accordance with the second embodiment. In this embodiment, a node status only changes based upon an MR **1800**.

[0223] FIG. **33** illustrates the LPG based routing method for a multicast messaging in accordance with this embodiment of the invention. Initially, each node is idle **3300**. When a packet arrives **3301**, the node determines whether the packet is a heartbeat control packet **1700** or an MR **1800**. Depending on the type of control packet, the node performs special packet processing. The node determines the type of control packet as step **3302**. If the control packet is an MR **1800** the node processes the packet starting with step **3303**. The node determines if the packet is native, step **3303**. A packet is native if the packet is for the same LPG **115**, i.e., the packet has the same GID **1705**. The node will compare the GID **1705** with the group identification stored in memory. If the GID does not match the identification stored in memory, the node will initiate Foreign MR handling, at step **3304**. Typically, foreign MR handling will result in the node ignoring the packet.

[0224] If the packet is native, the node will then determine if the MR **1800** is in sequence, at step **3305**. The node will compare the Seq. No. with the sequence number in memory. If the Seq. No. is less than the value stored in memory, the node will ignore the packet, at step **3305**. If the Seq. No. is greater than or equal to the value stored in memory, the MR **1800** is in sequence and the node will decide if the MR **1800** was originally sent from a leaf node **2405**, at step **3306**. If the MR **1800** was not sent from a leaf node **2405**, the node will ignore the MR **1800** for the purposes of multicast routing. If the MR **1800** was sent from a leaf node **2405**, the node will then determine if the node is either a GH **1300** or RN, at step **3307**. If the node is not in either state, the node will ignore the MR **1800** for the purposes of multicast routing. If the node is either a GH **1300** or RN, the node will update the MFT **3100**, i.e., become an FN **2410**, at step **3308**. This updating includes adding the multicast group **2400** to the MFT **3100**.

[0225] FIG. **34** illustrates a functional state transition diagram for a node in accordance with this embodiment. A node can be in either Non-FN state **3400** or FN state **3410** for a multicast group **2400**. If a node in state **3400** receives an MR **1800** with Leaf Node status, the node will transition to state **3410** and become an FN **2410**. The FN **2410** will set the FN timer for the multicast session. If the FN time for the multicast group **2400** expires, the FN **2410** changes its state from **3410** to **3400** and becomes a Non-FN (i.e., regular node) via transition **3420**. While in state **3410**, i.e., while being an FN, if the timer does not expire, the FN **2410** remains an FN, via transition **3425**.

[0226] In third multicast embodiment, GH **1300** can prune the scope of the multicast group **2400** created in accordance with the above embodiment to increase the efficiency for the routing. The prune operation removes unnecessary FNs. After collecting the MRs **1800** from leaf nodes **2405**, the GH **1300** defines the effective prune coverage and sends a prune message **3500**, if required. The prune message **3500** is separate from the heartbeat control packet **1700**. The effective prune coverage is conveyed as a hop count from GH to the closest leaf node. A prune message **3500** is processed and relayed by only FNs within the effective prune coverage. The FNs located in the effective prune coverage remove the associated multicast forwarding entry in their MFTs **3100** and become regular nodes.

[0227] FIG. **35** illustrates an example of the prune message packet **3500**. The prune message packet **3500** includes the group identification, group header, identifying a sequence number, the multicast member identification and the effective prune coverage. The multicast member identification is the IP address for the multicast group **2400**.

[0228] FIG. **36** illustrates the LPG based routing method for a multicast messaging in accordance with this embodiment of the invention. Initially, each node is idle **3600**. When

a packet arrives at **3601**, the node determines whether the packet is a heartbeat control packet **1700** or an MR **1800** or a prune message packet **3500**. Depending on the type of control packet, the node performs special packet processing. The node determines the type of control packet as step **3602**. If the control packet is an MR **1800**, the node processes the packet starting with step **3603**. The node determines if the packet is native, step **3603**. A packet is native if the packet is for the same LPG **115**, i.e., the packet has the same GID. The node will compare the GID with the group identification stored in memory. If the GID does not match the identification stored in memory, the node will initiate Foreign MR handling, at step **3604**. If the packet is native, the node will then determine if the MR **1800** is in sequence, at step **3605**. The node will compare the Seq. No. with the sequence number in memory. If the Seq. No. is less than the value stored in memory, the node will ignore the packet, at step **3605**. If the Seq. No. is greater than or equal to the value stored in memory, then MR **1800** is in sequence and the node will decide if the MR was originally sent from a leaf node **2405**, at step **3606**. If the MR **1800** was not sent from a leaf node **2405**, the node will ignore the MR **1800** for the purposes of multicast routing. If the MR **1800** was sent from a leaf node **2405**, the node will then determine if the node is a GH **1300**, at step **3607**. If the node is not a GH, the node will then determine if the node is an RN, at step **3608**. If the node is neither a GH nor an RN, the node will ignore the MR **1800** for the purposes of multicast routing. If the node is an RN, at step **3609**, the node will update the MFT **3100**, i.e., become an FN **2410**, at step **3609**. This updating includes adding the multicast group **2400** to the MFT **3100**.

[0229] If the node is a GH **1300**, then the GH **1300** will determine if there is a need for pruning based upon a preset parameter, at step **3610**. The preset parameter can be that there are only multicast members on one side of the GH **1300**. The GH **1300** will determine that the GH is not needed to be in the multicast group **2400**. The GH **1300** will remove the multicast group **2400** id from the MFT **3100**. Additionally, the GH **1300** will determine the closest multicast member to the GH. This determination will be based upon the hop count from GH. Any FN **2410** that is located within the prune coverage will be pruned when it receives a prune message which is originated from the GH. A prune message is relayed by pruning FNs (FN with no leaf nodes and located within the prune coverage), and the FN with leaf nodes, which is closest to the GH, stops relaying a prune message.

[0230] If, at step **3602**, the node determines that the packet is a prune message packet **3500**, the packet processing will start at step **3611**. The node determines if the packet is native, at step **3611**. A packet is native if the packet is for the same LPG **115**, i.e., the packet has the same GID. The node will compare the GID with the group identification stored in memory. If the GID does not match the identification stored in memory, the node will ignore the packet and become idle. The node will then determine if the prune message packet **3500** is in sequence, at step **3612**. The node will compare the Seq. No. with the sequence number in memory. If the Seq. No. is less than the value stored in memory, the node will ignore the packet, at step **3613**. If the Seq. No. is greater than or equal to the value stored in memory, the prune message packet **3500** is in sequence and the node will then determine if it is an FN **2410**, at step **3614**. If the node is not an FN, the node will ignore the packet and become idle. If the node is an FN **2410**, then the node will determine if it is within the effective prune coverage at step **3615**. Any FN **2410** that is closer to the GH **1300** than the closest leaf node is in the effective prune coverage. This determination is based upon the hop count to GH. The node will compare the hop count to GH previously stored in memory with the hop count information in the effective prune coverage. If the hop count to GH is less than the hop count from the effective prune coverage, the FN becomes a non-FN, at step **3616**. The node will update the MFT **3100** and remove the multicast identification from the MFT **3100**. If the hop count to GH is greater than the hop count from the effective prune coverage the node will remain an FN **2410**.

[0231] If, at step **3602**, the node determines that the packet is a heartbeat control packet **1700**, the node will just update the hop count information and other information that is stored in memory, at step **3617**.

[0232] FIGS. **37**A and **37**B illustrate functional state transition diagrams for a GH **1300** (FIG. **37**A) and an RN (FIG. **37**B) in accordance with this embodiment. As illustrated in FIG. **37**A, a GH **1300** can be in either Non-FN state **3700** or FN state **3710** for a multicast group **2400**. If a node in state **3700** receives an MR **1800** with Leaf Node status, the node will transition to state **3710** and become an FN **2410** via transition **3705**. The FN **2410** will set the FN timer for the multicast session. If the FN timer for the multicast group **2400** expires or if a prune is determined, the FN **2410** changes it state from **3710** to **3700** and becomes a Non-FN (i.e., regular node) via transition **3720**. While in state **3710**, i.e., while being an FN, if the timer does not expire or is reset, the FN **2410** remains an FN, via transition **3715**.

[0233] Similarly, RN can be in either Non-FN state **3700** or FN state **3710** for a multicast group **2400**. If a node in state **3700** receives an MR with Leaf Node status, the node will transition to state **3710** and become an FN **2410** via transition **3705**. The FN **2410** will set the FN timer for the multicast session. If the FN time for the multicast group **2400** expires or if a prune message packet **3500** is received, the FN **2410** changes it state from **3710** to **3700** and becomes a Non-FN (i.e., regular node) via transition **3725**. While in state **3710**, i.e., while being an FN, if the timer does not expire or is reset, the FN **2410** remains an FN, via transition **3715**.

[0234] Due to mobility of most of the nodes, the paths taken by an MR **1800** from a leaf node **2405** to the GH **1300** at different periods of time are different resulting in a different set of FNs **2410** for every MR period. Therefore, the multicast mesh or MFT **3100** is updated by FN timer and periodic MR messages. The efficiency for updating the MFT **3100** can be achieved by controlling the time for FN timer and the interval for periodic MR **1800**. By controlling these parameters, the MFT **3100** can be updated to account for mobility of both the leaf nodes **2405** and the FNs **2410**.

[0235] When a new multicast member wants to join the on-going multicast session, it sends its MR **1800** with Leaf Node status for that multicast session, as well as the multicast identification for the session it wants to join.

[0236] FIGS. **38**A and **38**B illustrate two multicast groups, one group formed solely based upon MRs **1800** (FIG. **38**A) and one group formed based upon MRs **1800** and prune message packet **3500**. As depicted in FIG. **38**A, leaf nodes, LN1, LN2 and LN3 $\mathbf{2405}_{1\text{-}3}$ join the multicast group **2400** by sending MRs **1800** towards the GH **1300**. All relaying nodes (RNs) between each leaf node and the GH **1300** become FNs **2410**, e.g., FN1, FN2, FN3 and FN4 ($\mathbf{2410}_{1\text{-}4}$). The formed multicast group **2400** includes five hops, size 5. However, since all three leaf nodes, LN1, LN2 and LN3 $\mathbf{2405}_{1\text{-}3}$ are

close together, i.e., on the same side of the GH **1300**, the GH **1300** is not needed to be in the multicast group **2400**. Accordingly the GH **1300** initiates pruning by pruning itself first, resulting in the GH **1300** becoming a Non-FN (FIG. **38**B). Based upon the multicast information collected, the GH **1300** determines the effective prune coverage. In this case, since LN3 $\mathbf{2405}_3$ is the closest to the GH **1300** and is 2 hops away, the prune takes place up to 2 hops: FN4 $\mathbf{2410}_4$ and FN3 $\mathbf{2410}_3$ become regular nodes. The mesh consists of only FN1 $\mathbf{2410}_1$ and FN2 $\mathbf{2410}_2$. Only FN1 $\mathbf{2410}_1$ and FN2 $\mathbf{2410}_2$ will have the multicast group identification in the MFT **3100**.

[0237] FIG. **39** illustrates an example of the multicast forwarding function for an FN for each hierarchical layer. Control packets **3930** are delivered through UDP to the Multicasting Processor **3915**, running in the Applications layer **3910**. The Multicasting Processor **3915** using any of the aforementioned methods, can update the Multicast Forwarding Table (MFT) **3100** implemented in IP layer **3905**, which is the part of the IP Multicast Forwarding Module. Multicast data packets in **3935** are received by the MAC layer **3900** initially and are forwarded to the IP layer **3905** to determine if the Multicast data packet in **3935** should be relayed or filtered out based on the MFT **3100**, which is updated by the Multicasting Processor **3915**. If the data packets in **3935** are determined to be forwarded, the FN **2410** forwards the packet as Multicast data packet out **3940**. The multicast control packets **3930** and multicast data packets in **3935** are not filtered out by the MAC layer. **3900**. An All Multicast mode must be enabled on the MAC layer **3900** so that all multicast frames in the MAC can be accepted, i.e., not filtered out by the MAC layer **3900** and forwarded to the IP layer **3905**. By enabling AllMulticast mode on an interface, all multicast packets (regardless of multicast addresses in the packets) to the network will be received by the interface. If AllMulticast mode is not enabled, the interface accepts only multicast packets whose multicast addresses are matched with those assigned on the interface.

[0238] FIG. **40** illustrates a flow chart for the forwarding function of the FN **2410** in accordance with an embodiment of the invention. Initially, the FN **2410** is idle, at step **4000**. At step **4005**, the FN **2410** receives a Multicast data packet in **3935**. The IP layer **3905** will then determine if the multicast group **2400** is in the MFT **3100**, at step **4010**. The IP layer **3905** will compare the IP address of the multicast group **2400** from the Multicast data packet in **3935** with the IP addresses stored in the MFT **3100**. Based upon the results of the comparison, the FN will either discard the Multicast data packet in **3935** at step **4015** or determine if the Multicast data packet in **3935** has already been sent by the FN **2410**. Each FN **2410** has a sent list for all Multicast data packets in **3935** that are sent, stored in memory. Specifically, the sent list includes the identification for all Multicast data packet in **3935** that are sent within a preset period of time. The packet identification includes the source address of the Multicast data packets in **3935** and the identification information from the IP packet header. This preset period of time can be controlled to avoid the sent list from becoming excessively large. The function of the sent list is to prevent duplicative multicast packet transmission. Therefore, a Multicast data packet in **3935** only needs to be listed on the sent list for a short period of time, long enough to ensure that the packet is not a duplicate. At step **4020**, the IP layer **3905** will determine if the Multicast data packet in **3935** has already been sent by comparing the source, i.e., source IP address in IP Header, and id, i.e., Identification in IP Header, for the received Multicast data packet in **3935** with the source and identification in the sent list. If there is a match, the FN **2410** will discard the Multicast data packet in **3935**, at step **4015** and become idle, at step **4000**. If there is no match, the Multicast data packet in **3935** is not previously sent and the FN **2410** will send the Multicast data packet in **3935**, at step **4025**. The FN **2410** will also update the sent list, at step **4025**, by adding the source and id from the Multicast data packet in **3935** to the sent list.

[0239] In another embodiment of the invention, in order to prevent unnecessary transmission of duplicate packets by co-located FNs, which is a waste of bandwidth, all of the co-located FNs, except one, will be prevented from sending the Multicast data packet in **3935**, i.e., relaying the packet. A co-located FN is an FN within the same radio range, i.e., same hop. Duplicative multicast packets are sent when the same multicast data packet in **3935** is sent from the same source to the same recipient by two different FNs.

[0240] According to this embodiment, if an FN **2410** receives a multicast data packet in **3935**, it will check a MAC back-off Queue for the multicast data packet in **3935**. If the multicast data packet in **3935** is present in the queue, it will be removed from the queue and transmission of the packet will not occur, i.e., if FN **2410** receives the packet during the back-off period for the packet transmission, it will suppress the transmission. IP layer (IP forwarding module) must signal to the MAC to perform such suppression.

[0241] FIG. **41** illustrates a flow chart for the forwarding process for the FN **2410** in accordance with this embodiment of the invention for a cross layer operation, i.e., MAC layer **3900** and IP layer **3905**. Specifically, FIG. **41** illustrates the forwarding steps for the FN **2410**, layer by layer.

[0242] Initially, the FN **2410** receives the multicast data packet (referenced as MP[s:g] in FIG. **41**). The packet MP[s:g] is forwarded to the IP layer **3905** for processing. The IP layer **3905** determines if the multicast group **2400** is in the MFT **3100**, at step **4105**. The IP layer **3905** will compare the IP address of the multicast group **2400** from the MP[s:g] with the IP addresses stored in the MFT **3100**. If the multicast IP address does not match the multicast IP addresses in the MFT **3100**, then the IP layer discards the MP[s:g], at step **4110**. If the multicast IP address does match the multicast IP addresses in the MFT **3100**, then the IP layer **3905** will determine if the MP[s:g] was sent, at step **4115**. The IP layer **3905** will then determine if the MP[s:g] has already been sent by comparing the source and id for the received MP[s:g] with the source and ids in the sent list. If there is a match, the IP layer **3905** will discard the MP[s:g], at step **4120** and the IP layer **3905** will determine if MP[s:g] is already in the Transmission back-off queue at MAC layer, at step **4125**. If the packet is not in the Transmission back-off queue, then the node will become idle, at step **4140**. If there is a match, then the MP[s:g] is in the Transmission back-off queue, the MAC layer will delete the packet from the Transmission back-off queue, at step **4130**. If there isn't a match in the sent list, then the MP[s:g] will be added in the sent list and added to the Transmission back-off queue at step **4135** for transmission. MP[s:g] is forwarded at step **4140**.

[0243] In another embodiment, to improve efficiency for relaying a message and to ensure timely delivery a passive acknowledgement will be added. In the above-described embodiment, there is no acknowledgement from a node that the packet was received. Therefore, there is no guarantee that a leaf node received the packet. Accordingly, there is no indication that the packet should be retransmitted.

[0244] According to this embodiment, after transmitting a packet, an FN **2410** waits for the packet to be forwarded a second time by a neighboring FN. When the neighboring FN **2410** forwards the packet, the initial FN **2410** will receive the packet. This received packet is a passive acknowledgement that the neighboring FN received the initial forward. If the acknowledgement is not received with a preset period of time, the initial FN can retransmit the packet.

[0245] FIG. **42** illustrates a flow chart for the forwarding process, which includes passive acknowledgement, for the FN **2410** in accordance with this embodiment of the invention for a cross layer operation, i.e., MAC layer **3900** and IP layer **3905**. Specifically, FIG. **42** illustrates the forwarding steps for the FN **2410** layer by layer.

[0246] Steps **4205-4215** are the same as the prior embodiment and, therefore, will not be described in detail again. If, at step **4215**, the packet MP was already sent, the new MP will be discarded at step **4220**. If, at step **4215**, the packet MP was not sent, the node will update the sent list by adding the packet identification to the sent list and adding the destination to the list, at step **4235**. Additionally, the node will set an acknowledgement timer and an acknowledgement status parameter to running. Furthermore, at step **4235**, the node will send the packet (MP) to the MAC layer **3900** for queuing. Optionally, the node can increment a sent counter that counts the number of times that the packet is sent to a particular group within a predetermined period of time. The packet (MP) is added to the Transmission Back-off Queue, at step **4240**.

[0247] If the packet was already sent and if the new MP was discarded, the node will then determine the status of the acknowledgement, i.e., if the packet was acknowledged, at step **4225**. A packet is acknowledged if a sent packet is received within a predetermined time. If the status is running, i.e., not acknowledged, the node will stop the acknowledgement timer and modify the acknowledgement status to acknowledged, at step **4230**. If the status is acknowledged, then the node will become idle at step **4265**. Simultaneously, the node will monitor the acknowledgment timer to determine if the timer expires without receiving the acknowledgement. When the acknowledgement timer expires, without an acknowledgement of the packet, the node will resend the packet, at step **4260**. Additionally, at step **4260**, the node will reset the acknowledgement timer and maintain the acknowledgement status as "running". The packet will be added to the transmission back off queue at step **4240**.

[0248] In general the moving vehicles **110** can forward packets using either a single channel transmission or multiple channel transmission. For multiple channel transmission, the moving vehicles can use one transmitter with multiple destination receivers or one transceiver. In the former case, a moving vehicle **110** is able to transmit on either one of two channels and to receive through both channels. But it cannot simultaneously transmit on and receive through the same channel. In the later case, a moving vehicle **110** is restricted to transmit on and receive through a particular channel, but the transmitting and receiving channels don't have to be the same.

[0249] In the preferred embodiment, the transmission will occur using multiple channels. For multicasting, the FNs and Leaf nodes actively select a channel(s) for transmitting and receiving multicast packets. With a multi-channel system, throughput is increased and delay is reduced. However, a multi-channel system requires prior channel coordination among FNs **4210**.

[0250] In an embodiment of the invention, the FNs **4210** coordinate the multi-channel environment such that multicast forwarding is a Channel-alternate Forwarding. The FNs arranges transmission and reception channels in an alternate pattern so that the transmission and reception channels are always different: If an FN **2410** receives a multicast packet from CHA, it will forward the multicast packet through CHB, vice versa.

[0251] FIG. **43** illustrates an example of the Channel-alternate forwarding assignment according to this embodiment of the invention. As depicted in FIG. **43**, there are two channels CH1 and CH2, **4310** and **4320**, respectively. There are six FNs, FN1-FN6 ($\mathbf{2410}_{1\text{-}6}$). The shaded areas between the FNs indicate five radio coverage regions. Each FN, i.e., FN1-FN6 ($\mathbf{2410}_{1\text{-}6}$) can transmit and receive a packet via CH1 **4310** and CH2 **4320**. However, when a packet is received in CH1 **4310**, it will be forwarded through CH2. Similarly, when a packet is received in CH2 **4320**, it will be forwarded through CH1 **4310**. Therefore, linearly connected FNs **2410** will use the two channels alternately.

[0252] If the moving vehicles **115** have a single channel reception device, the alternate arrangement of the transmission and reception channels is achieved through the transmission and reception of heartbeat control packets **1700** and MRs **1800**. The heartbeat control packet **1700** will have channel information, i.e., the transmission and reception channels for the GH **1300**. The heartbeat control packet **1700** is broadcast and received by all FNs. The closest FNs to the GH **1300**, i.e., smallest hop count to GH, will set their channels first based upon the information in the heartbeat control packet **1700**. The transmission and reception channels for these FNs will be selected to alternate with the GH's channels. Once the closest FNs have set their channels, the next closest FNs will assign their transmission and reception channels accordingly. This will continue until all of the channels are set for all FNs.

[0253] FIG. **44** illustrates an example of the channel assignment for the transmission and reception channels in accordance with this embodiment. FIG. **44** uses the same FNs as depicted in FIG. **43**. FN4 $\mathbf{2410}_4$ is the GH **1300**. The GH **1300** assigns itself Transmission channel 1 T-CH1 and Reception channels 2 (R-CH2). GH/FN4 $\mathbf{2410}_4$ broadcasts its heartbeat control packet **1700** with the transmission and reception channel information. FN3 $\mathbf{2410}_3$ and FN5 $\mathbf{2410}_5$ assign their transmission and reception channels to alternate with the GH/FN4 $\mathbf{2410}_4$. FN3 $\mathbf{2410}_3$ and FN5 $\mathbf{2410}_5$ assign T-CH2 and R-CH1 for their transmission and reception channel, respectively. FN2 $\mathbf{2410}_2$ and FN6 $\mathbf{2410}_6$ then assign their transmission and reception channels based on the information in the heartbeat control packet and hop count from GH. FN2 $\mathbf{2410}_2$ and FN6 $\mathbf{2410}_6$ assign T-CH1 and R-CH2. Lastly, FN1 $\mathbf{2410}_1$ assigns its transmission and reception channel. FN1 $\mathbf{2410}_1$ assigns T-CH2 and R-CH1. If the moving vehicle **110** has a two channel reception device, the above-identified assignment is not required. Every FN **2410** would be able to send on either CH1 or CH2 and receive on both channels.

[0254] The channel information of a received multicast packet is provided from a channel access module in the MAC layer **3900**. An incoming multicast packet is first marked with the reception channel. This allows for the multicast packet to be identified and forwarded with the transmission channel that is different from the reception channel. If a multicast packet is marked with CH1, the multicast packet will be forwarded through CH2. A leaf node **2405** will synchronize

its transmission and reception channels with their FNs **2410** though internal Channel Access Mechanisms.

[0255] The single channel alternate forwarding process can result in a hidden terminal problem when packets are simultaneously received on the same channel, i.e., FN3 $\mathbf{2410}_3$ receives a packet from both FN4 $\mathbf{2410}_4$ and FN2 $\mathbf{2410}_2$ on channel 1.

[0256] In another embodiment, transmission and reception channels will be assigned in a double channel alternate manner. Double Channel-alternate Forwarding channel assignment has the advantage that hidden terminal conditions are avoided. This method arranges transmission channels in a double-alternate pattern. It creates regions of an exclusive transmission channel and arranges such regions in a double-alternate pattern. An exclusive region with the same transmission channel appears every two-hops. FNs **2410** can receive multicast packets through both Channels. When a multicast packet is received, it will be forwarded through the given transmission channel.

[0257] FIG. **45** illustrates an example of the channel assignment for the transmission and reception channels in accordance with this embodiment for the FN mesh. FIG. **45** uses the same FNs as depicted in FIG. **43**, i.e., FN1-FN6 ($\mathbf{2410}_{1\text{-}6}$). In this example, the channels are assigned such that there is one exclusive transmission channel area for T-CH1 **4500**. There are two exclusive transmission channel areas for T-CH2 **4520**. Additionally, there are two mixed channel areas **4510**. FN1 $\mathbf{2410}_1$ and FN2 $\mathbf{2410}_2$ will transmit on T-Ch2; FN3 $\mathbf{2410}_3$ and FN4 $\mathbf{2410}_4$ will transmit on T-CH1; and FN5 $\mathbf{2410}_5$ and FN6 $\mathbf{2410}_6$ will transmit on T-CH2. Each FN, i.e., FN1-FN6 ($\mathbf{2410}_{1\text{-}6}$) can receive on either R-CH1 or R-CH2.

[0258] FIG. **46** illustrates a flow chart for the channel assignment of both the reception and transmission channels in accordance with an embodiment of the invention. At step **4600**, the GH **1300** specifies its own transmission channel, i.e., T-CH1. This transmission channel will be used as a reference transmission channel for the remaining FNs **2410** to set their transmission channel. The GH **1300** will then select one classification side (e.g., red or blue), at step **4605**. The selected classification site will be used as a reference classification side. The GH **1300** will then broadcast a heartbeat control packet **1700** to all FNs **2410**, at step **4610**. In this embodiment, the information of the reference transmission channel and classification side will be included in the heartbeat control packet **1700**.

[0259] At step **4615**, all other FNs **2410** will receive the heartbeat control packet **1700** and proactively assign their own transmission channel based upon the information of the reference transmission channel, the classification side and hop distance from the GH. If FNs **2410** are located within the reference side (i.e., the both classifications of the reference classification side and the FNs are the same), then they will determine their transmission channels based on the formula, mod(int[(1+h)/2], 2), where mod(a, b) is the positive reminder in the division of a by b, int[ ] takes a number and chops off any decimal points, and h is the hop distance from the GH. If FNs **2410** are located on the side other than the reference classification side, they will use the formula, mod (int[h/2], 2), to determine their transmission channels. If the output of the formula is 1 (for either cases), the FNs **2410** assign their transmission channels as different from the reference transmission channel, i.e., if the reference transmission channel is T-CH1, then they will set their transmission channels as T-CH2. If the output of the formula is 0, they will set their transmission channels as the reference transmission channel.

[0260] Using the hop count to GH information stored in memory and the received information from the heartbeat control packet **1700**, the FNs **2410** will assign their transmission channels keeping with the double-alternate pattern assignment.

[0261] While multicast routing and unicast routing have been described as separate processes, both of the routing methods can be performed by the same moving vehicles **110**. Accordingly, a received packet might not be relevant to one routing method, but will be relevant to another. Therefore, if a control packet was described as being ignored and the node becoming idle for a specific routing process, the packet might not be ignored for the other and the node might not become idle. For example, for unicasting routing, both the heartbeat control packet **1700** and the MR **1800** are used to update the routing table **2300**, whereas, depending on the embodiment, for multicast routing, only one of the two control packets might be needed.

[0262] Additionally, the unicast and multicast routing processes were mainly described with respect to moving vehicles and moving nodes, however, the unicast and multicast routing processes can be performed by any node, e.g., RSUs **100**.

[0263] A wireless communication device in a moving vehicle performs the above-described protocols and methods, e.g., unicasting and multicasting. This wireless communication device is similar to the communication device in the RSU **100** as depicted in FIG. **11**. The wireless communication device includes a broadcasting means or transmission and reception means, such as a wireless transceiver, for providing wireless communication between nodes in a radio coverage range. Additionally, a controlling means, e.g., microcontroller, microprocessor, etc., is configured for receiving signals from other nodes through the transmission and reception means and transmitting signals to other nodes through the transmission and reception means. The controlling means also provides operational control by executing the above-described protocols as processor-executable instructions. A storage means is disposed within the wireless communication device and in operational communication with the controlling means. The storage means may be memory modules, removable media, a combination of multiple storage devices, etc. and is dimensioned to store the processor-executable instructions necessary for the performance of the protocols of the described embodiments. Further, a timing means is provided either as a separate component or via a function of the controlling means. The timing means provides the time interval tracking necessary for each of the timers referred to in the described embodiments. An energizing means, such as a power supply, is electrically connected to all the components of the wireless communication device for providing operational power to the components as necessary.

[0264] The processor-executable instructions for performing the described embodiments may be embedded in the storage means in a form such as an EPROM, Flash memory or other such non-volatile storage. Additionally, the processor-executable instructions may be stored on a computer readable media such as an optical or magnetic medium, or may be downloadable over a network (e.g., Internet). Preferably, the processor-executable instructions can be updated by a user periodically, as necessary, in order to provide additional enhancements to the system as they become available.

Inter-LPG Routing Service Vian RSU

[0265] In an embodiment of the invention, the RSU **100** can relay packets between multiple LPGs **115** within its radio coverage. In this embodiment, the RSU **100** is not a part of one specific LPG **115**, but rather used as a boundary node by the multiple LPG **115** to propagate information, unicast or multicast, to other LPGs **115** within RSU radio coverage. The GHs **1300**, FNs **2410**, GN **1500** would forward all inter-LPG packets, unicast or multicast, to the RSU **100**. The RSU **100** would then relay the packet to the appropriate LPG **115** or node. Within each LPG **115**, each node would communicate with each other using the above-described routing processes. RSUs **100** can be linked to each other to share information. Linked RSUs **100** relay information to nearby RSUs **100** to reach a large number of local LPGs **115**. RSUs **100** that are edge nodes to the backbone network can relay inter-LPG **115** packets to a large number of LPGs **115** and to backbone servers that collect such information.

[0266] According to this embodiment, the RSU **100** is only an inter-LPG relay node and not a member of the LPG **115**. This reduces the organization and role assignment time in LPG **115** to incorporate the RSU **100**. Since the RSU is not fully participating in the LPG **115**, the initial LPG structure is maintained. Additionally, the selection process of boundary nodes (BN) for a moving vehicle **110** within a LPG **115** within the RSU **100** coverage is eliminated. However, boundary nodes will be needed once outside RSU area. LPGs **115** and individual vehicles discover the RSU in several ways. Vehicles can have apriori knowledge of RSU **100** allowing them to identify the inter-LPG relays in advance. This knowledge is provided by other RSUs **100** (in the linked RSU case) or perhaps by preceding moving vehicles **110**. In addition, the RSU locations and information can be pre-configured in the moving vehicles **110**, or the RSU **100** can be dynamically discovered via beacons from the RSU **100** designating it as an inter-LPG relay node.

[0267] The RSU **100** can track LPGs **115** in its area by listening for heartbeat control packets **1700** from the GHs **1300**. The moving vehicles **115** or nodes send heartbeat control packets **1700** over both V-R and V-V channels. The V-V channel is used exclusively for intra-LPG related traffic, while the V-R channel is used for the inter-LPG traffic.

Other RSU Services

[0268] The RSU **100** can be used for a plurality of network services and vehicle services. For example, the RSU **100** can provide authentication assistance for nodes, network information collection such as locations and IF addresses of RSUs, configuration assistance for LPG **115** and RSU **100** connections and mobile node roaming assistance. Additionally, the RSU **100** can be used for vehicle safety alerts, RSU-based positioning, vehicle maintenance information, toll collection and location information regarding goods and services within the area. Some of the above-identified services can function without a backbone, however, other services need backbone connectivity.

[0269] In one embodiment the RSU **100** supports and network authentication for moving vehicles **110**. FIG. **47** illustrates an example of the RSU **100** supporting the authentication process. A remote certification/validation authority (CA/VA) **4700** maintains a list of certified and authorized nodes **4705** and provides authentication services. Typically, each node entering network individually authenticates itself through the CAVA **4700**. However, in a highly mobile environment, the authentication must be performed in a short period of time, because a moving vehicle is only within range of the CA/VA **4700** for a short connection period, i.e., while the node is within radio coverage of the CA/VA **4700** or another standard stationary node. According to this embodiment of the invention, the RSU **100** helps the CA/VA **4700** by off-loading the authentication information to the GH **1300** while the GH **1300** is in communication with the RSU **100**, i.e., within the radio coverage area for the RSU **100**. In FIG. **47**, a dashed line indicates the radio coverage area for the RSU **100**. After the list is off-loaded to the GH **1300**, the GH **1300** will act like the CAVA **4700**. The GH **1300** will authenticate the other nodes using the heartbeat control packet **1700** and MR **1800**. Therefore, the authenticate process can still occur when the LPG **115** is not within the radio coverage for the RSU **100**. In this embodiment, the heartbeat control packet **1700** and the MR **1800** will be modified to include parameters for the authentication process. However, there is no need for any other modifications or overhead for the authentication process. The GH **1300** can collectively authenticate the members of the LPG **115**. As depicted, the GH **1300** authenticated moving vehicles $\mathbf{110}_1$-$\mathbf{100}_9$ and $\mathbf{110}_{11}$, but denied $\mathbf{110}_{10}$, i.e., the moving vehicle $\mathbf{110}_{10}$ was banned. If a GN **1500** cannot use GH **1300** to authenticate, the GN **1500** can use the RSU **100** directly to complete authentication with the CA/VA **4700**. This redundancy mechanism allows for cases when the GH **1300** moves out of range of the LPG **115** or RSU **100** before list offload or authentication handshake is completed.

[0270] In another embodiment, the RSU **100** can be used to assist in the network configuration process and LPG **115** formation. Specifically, since the RSUs **100** are aware of other RSUs **100** within the network and all LPGs **115** within its radio coverage, the RSU **100** can pre-configure moving vehicles **110** for upcoming RSUs **100** or assist LPG **115** formation. The network configuration parameters can includes timeslot assignment, channel assignment, IP address for upcoming, i.e., downstream RSUs **100**, and ESSID.

[0271] The RSU **100** can also help assign the V-V channels for the LPGs **115**, and assist a moving vehicle **110** in finding a LPG **115** to join. Additionally, the RSU **100** can assist in a merging and splitting of LPGs **115**.

[0272] FIG. **48** illustrates an example of multiple RSUs **100** assisting in the LPG maintenance, formation and providing network configuration assistance.

[0273] RSU2 $\mathbf{100}_2$ is capable of pre-configuring moving vehicles $\mathbf{110}_7$-$\mathbf{110}_{11}$ for the network settings for RSU1 $\mathbf{100}_1$. This helps reduce connection delay time, giving nodes a more effective communication time once it enters the radio coverage area for RSU1 $\mathbf{100}_1$. The shaded areas indicate the radio coverage area for the RSUs **100**. For example, RSU2 $\mathbf{100}_2$ broadcasts the pre-configuring settings to moving vehicle $\mathbf{110}_7$. This information can be relayed to other moving vehicles **110** within the LPG **115** or received from the RSU **100** directly. Using the RSU **100** pre-configuration assistance, the nodes can maintain a virtual connection with the entire network as it moves through various RSU areas. RSU2 $\mathbf{100}_2$ would need to be aware of the direction that the moving vehicles were traveling so it can determine the appropriate downstream RSU **100**, i.e., RSU1 $\mathbf{100}_1$ in FIG. **48**. While FIG. **48** depicts a network without a backbone **200**, the network can include a backbone that includes a database of all RSU **100** configuration parameters.

[0274] Additionally, the RSU **100** can select V-V channels for intra-LPG communication to avoid channel interference The RSUs **100** will use the V-R channel to inform the LPGs **115** which channel is available for use. The RSU **100** will transmit the channel assignment to the GH **1300** for relaying to the members. For example, LPG1 $\mathbf{115}_1$ can be assigned Channel A by RSU1 $\mathbf{100}_1$ by broadcasting this information to moving vehicle $\mathbf{110}_2$. Similarly, LPG2 $\mathbf{115}_2$ can be assigned Channel B by RSU1 $\mathbf{100}_1$ by broadcasting this information to moving vehicle $\mathbf{110}_5$. Moving vehicles $\mathbf{110}_1$ and $\mathbf{110}_5$ will relay the message for the other vehicles within each respective LPGs **115**.

[0275] If the RSU detects a conflict due to the mobility of the LPGs **115**, the RSU **100** can send an updated channel assignment to the LPGs **115**. This will prevent interference, help both formed LPGs **115** and newly created LPGs **115**. For newly created LPGs **115**, the RSU **100** will assign an available channel to the newly created LPG **115**.

[0276] Additionally, the RSU **100** can assist a moving vehicle **110** to find a LPG **115**. The RSU **100** can broadcast information regarding LPGs **115**, such as LPG identifications, channel assignments, and number of members using the V-R channel. For example, RSU1 $\mathbf{100}_1$ can broadcast this information to moving vehicle $\mathbf{110}_6$ for LPG1 $\mathbf{115}_1$ and LPG2 $\mathbf{115}_2$. In this embodiment, new members can join a LPG **115** before hearing a heartbeat control packet **1700**. If the RSU **100** is isolated, the RSU **100** can only assist local LPGs **115** in formation, i.e., vehicles and LPGs **115** within radio coverage area per the RSU **100**. However, if the RSUs **100** are linked, new moving vehicles **110** moving from one RSU **100** to another can be pre-configured to join another LPG via the RSU **100**.

[0277] RSU **100** can control merging of two LPGs **115**. RSU **100** will broadcast a control packet to one of the GHs requiring the GH **1300** to stop broadcasting the heartbeat control packet **1700** and invoke the other GH to expand the scope (Hop counts) of the heartbeat control packet **1700** so that the moving vehicles **110** in the other LPG **115** can hear the range-expanded heartbeat control packet **1700** and join the LPG **115**. Similarly, the RSU **100** can control splitting of one LPG **115**.

[0278] In another embodiment, the RSU **100** can serve as a temporary message repository and information collection device. All passing moving vehicles **110** can deposit information to the RSU **100** for pick-up by other moving vehicles **110**. The RSU **100** will collect and aggregate information for its local area. Additionally, if linked to other RSUs **100** the RSUs **100** can share the locally collected information. Furthermore, if connected to a backbone **200**, then the information can be relayed to the backbone **200** for storage.

[0279] The collected information can range from traffic information, accident alerts, weather information and road conditions. This information can be broadcast to passing moving vehicles **110** without a request. Alternatively, the moving vehicles **110** can actively request this information. If the RSUs **100** are isolated, the moving vehicles need to upload the same information to each RSU **100** that the moving vehicle **110** encounters. The information can also include information regarding other RSUs **100** that the moving vehicle **110** encounters to build a database of RSUs **100**, i.e., learn about other RSUs via passing moving vehicles **110**.

[0280] FIG. **49** illustrates an example of the information collection process with two linked RSUs. (RSU1 $\mathbf{100}_1$ and RSU2 $\mathbf{100}_2$). RSU1 $\mathbf{100}_1$ and RSU2 $\mathbf{100}_2$ are linked by connection **400**. This connection **400** can be a wired connection or wireless. Both RSU1 $\mathbf{100}_1$ and RSU2 $\mathbf{100}_2$ broadcast the collected information on the V-R channel. In this embodiment, the RSU **100** is not a node of the LPG **115**. Individual nodes can deposit and receive the information using the LPG routing process described above or directly broadcast the information of the V-R channel. The moving vehicles **110** will discover the RSU **100** by a beacon as a depositing point. Alternatively, the moving vehicles can discover other RSUs via an upstream RSU. As depicted in FIG. **49**, moving vehicles $\mathbf{110}_5$ and $\mathbf{110}_6$ can discover RSU1 $\mathbf{100}_1$ from RSU2 $\mathbf{100}_2$. RSU1 $\mathbf{100}_1$ is the deposit point for moving vehicles $\mathbf{110}_1$-$\mathbf{110}_4$ and RSU2 $\mathbf{100}_2$ is the deposit point for moving vehicles $\mathbf{110}_4$-$\mathbf{110}_6$. Moving vehicle $\mathbf{110}_4$ can deposit information to both RSU1 $\mathbf{100}_1$ and RSU2 $\mathbf{100}_2$. Since RSU1 $\mathbf{100}_1$ and RSU2 $\mathbf{100}_2$ are linked, all of the deposited information can be received by all of the moving vehicles $\mathbf{110}_1$-$\mathbf{110}_6$.

[0281] In another embodiment, the RSU **100** can be used to relay safety information to multiple LPGs **115**. FIG. **50** illustrates an example of the network configuration and forwarding process for routing the safety information for two RSUs: RSU1 $\mathbf{100}_1$ and RSU2 $\mathbf{100}_2$. Each RSU **100** includes a router **1030** and a Safety Alert Application Service **5000**. The safety alert message is handled by Safety Alert Application Service **5000**. The Safety Alert Application Service **5000** processes the message according to the type of message and the content in the message. It determines whether to route the message or stop routing the message.

[0282] In the preferred embodiment for routing the safety message, the network includes a backbone **200**. The backbone **200** includes a router for each RSU **100**. Between the backbone **200** and the RSUs **100** is an RSU hub **5010** that directs the information accordingly.

[0283] FIG. **50** depicts five LPGs, $\mathbf{115}_{1\text{-}5}$, each having at least one moving vehicle **110**. FIG. **50** depicts an accident in LPG1 $\mathbf{115}_1$. The safety alert message is forwarded within LPG1 $\mathbf{115}_1$ via intra-LPG routing according to one of the routing process described above. The message is also routed between the LPGs **115** via inter-LPG routing procedures. Furthermore, the message is routed between the LPGs **115** using the RSU **100** and Safety Alert Application Services **5000**. For example, one node within LPG1 $\mathbf{115}_1$ broadcasts the safety message to RSU1 $\mathbf{100}_1$. RSU $\mathbf{100}_1$ processes the message using Safety Alert Application Services $\mathbf{5000}_1$ to determine if the message should be forwarded. RSU1 $\mathbf{100}_1$ can forward the message to LPG2 $\mathbf{115}_2$ and LPG3 $\mathbf{115}_3$, if necessary. Additionally, RSU1 $\mathbf{100}_1$ sends the safety message to the backbone **200**. The message is then routed to RSU2 $\mathbf{100}_2$ vian RSU hub **5010**. RSU2 $\mathbf{100}_2$ processes the safety message using the Safety Alert Application Service $\mathbf{5000}_2$ to determine if the message should be forwarded. RSU2 $\mathbf{100}_2$ can forward the message to LPG4 $\mathbf{115}_4$ and LPG5 $\mathbf{115}_5$. As depicted, both RSUs, RSU1 $\mathbf{100}_1$ and RSU2 $\mathbf{100}_2$, determine that the safety message should be relayed to the remaining LPGs $\mathbf{115}_{1\text{-}5}$. The dashed lines represent the relaying of the safety message.

[0284] In another embodiment, the RSU **100** can be used to track the position of a moving vehicle **110** without the use of a GPS system. FIG. **51** illustrates an example of the network configuration for determining the position of moving vehicles **115** for two RSUs, RSU1 $\mathbf{100}_1$ and RSU2 **1002**. The network configuration for this embodiment is substantially similar to the prior embodiment, as depicted in FIG. **50**, except that

instead of the Safety Alert Application Service **5000** in each RSU **100** a Position Application Service **5100** is included.

[0285] The Position Application Service **5100** periodically broadcasts its position **5110**, i.e., position of the RSU **100**, each moving vehicle **110** reports its presence to the Position Application Service **5100** in the RSU **100**. The moving vehicle **110** sends the report via an MR **1800** directly to the RSU **100** via the V-R channel. Alternatively, each moving vehicle **110** can send the MR **1800** to the GH and the GH sends aggregate messages to the RSU **100**. This will save bandwidth. Any moving vehicle **110** within radio coverage of the RSU1 $\mathbf{100}_1$ is in Area 1, whereas any moving vehicle **110** within the radio coverage of RSU2 $\mathbf{100}_2$ is in Area 2.

[0286] The position information is disseminated by the Position Application Service **5100** to all nodes. The position information is stored in the backbone **200** for use by other RSUs **100***s*. FIG. **51** depicts one beacon **5110** directed to LPG1 $\mathbf{115}_1$ for illustration, however, the beacon **5110** is broadcast to all LPGs **115** and moving vehicles **110**.

[0287] According to this embodiment, a moving vehicle's relative position can be tracked, i.e., area 1 verses area 2. For a more accurate position measurement, remote APs **330** are used for position tracking. The APs **330** will send out the position beacon **5110**. The moving vehicles **110** within its coverage will respond with an MR **1800**. The relative location information will be forwarded to the RSU **100** and position application service **5100**. The relative location can be determined within a smaller area, i.e., area **1**, sub A. Additionally, the frequency of the beacons **5110** and MR **1800** can be increased for a more accurate position tracking. The dashed lines from the routers **1030** represent the position information being forwarded to other LPGs $\mathbf{115}_{2\text{-}5}$

[0288] This feature is particularly useful for tracking cargo. Additionally, the features can be used to track mobile nodes to support one-to-one communication. For example, if a node moves out of a LPG **115**, the LPG **115** does not have any information regarding the node. A node in the middle of communication will be disconnected. Therefore, this feature allows the node to maintain connection as a node moves out of the LPG **115**. The RSU **100** will serve as a foreign agent. In this case, the RSU **100** sends the location information to server in the backbone **200** which stores this information for use in forwarding traffic to a mobile node.

[0289] In another embodiment, the RSU **100** can be used for moving vehicle maintenance services. FIG. **52** illustrates an example of two RSUs **100** used in maintenance services. In this configuration, a Vehicle Maintenance Server **5200** is installed in the backbone **200**. Both RSU1 $\mathbf{100}_1$ and RSU2 $\mathbf{100}_2$ are linked and can communicate with the backbone **200**. Moving vehicle $\mathbf{110}_1$ is in radio range of RSU1 $\mathbf{100}_1$ and moving vehicles $\mathbf{110}_{24}$ are in radio range of RSU2 $\mathbf{100}_2$. According to this embodiment, the RSUs **100** can receive diagnostic information from the moving vehicles **110** and provide emergency maintenance information. The diagnostic information will be sent to the vehicle maintenance server **5200** for storage. The RSU **100** will then provide information such as location of gas stations, hospitals, tire repair shops, oil stations, etc. This information will be based upon the relative position of the moving vehicle **110** determined based upon the above-identified process or the location of the RSU **100**. For example, if moving vehicle $\mathbf{110}_1$ runs out of gas, the moving vehicle $\mathbf{110}_1$ can request information from the RSU **100** regarding the location of the nearest gas station. RSU1 $\mathbf{100}_1$ will determine the nearest gas station and broadcast the information to moving vehicle $\mathbf{110}_1$. Similarly, if moving vehicle $\mathbf{110}_2$ gets a flat tire, the moving vehicle $\mathbf{110}_2$ can request information from the RSU2 $\mathbf{100}_2$ regarding the location of the nearest gas station. RSU2 $\mathbf{100}_2$ will determine the nearest tire replacement store and broadcast the information to moving vehicle $\mathbf{110}_2$.

[0290] Additionally, if moving vehicle $\mathbf{110}_3$ has a check engine signal indicator, the moving vehicle $\mathbf{110}_2$ can request information from the RSU2 $\mathbf{100}_2$ regarding the location of the nearest gas station. RSU2 $\mathbf{100}_2$ will determine the nearest gas station and broadcast the information to moving vehicle $\mathbf{110}_3$. The RSU **100** will also send a report to the vehicle maintenance server **5200** indicating the emergency event from moving vehicle $\mathbf{110}_3$ for storage.

[0291] The RSU **100** can also track recall information regarding the moving vehicles **110** in the vehicle maintenance server **5200** as well as service reminders. The service reminders can include oil changes, fluid replacements, tire rotations, and inspections. Each time a service is needed, the RSU **100** using the information from vehicle maintenance server **5200** can affirmatively send a reminder to the moving vehicle **110** indicating the need for a service and the type of service.

[0292] In another embodiment of the invention, the RSU **100** can be used to facilitate and collect tolls. FIG. **53** illustrates an example of an RSU **100** configuration for the collection of a toll. The toll collection system includes a backbone **200**, the RSU **100** and APs **330**. As depicted, the system has five APs $\mathbf{330}_{1\text{-}5}$. The RSU1 $\mathbf{100}_1$ is connected to the APs $\mathbf{330}_{1\text{-}5}$ via a hub **320**. RSU1 $\mathbf{100}_1$ includes a router and a toll collection application service **5300**. One of the APs **330**, e.g., AP1 $\mathbf{330}_1$ is equipped with a toll scanning device. A moving vehicle entering the toll scanning region receives an initial toll collection signal **5305** from RSU1 $\mathbf{100}_1$ via the toll collection application service **5300** relayed through AP1 $\mathbf{330}_1$ to initiate the toll collection process. Upon receipt of the signal, the moving vehicle **110** invokes a toll paying transmission by relaying with its information such as a vehicle identification and credit card number **5310**. In another embodiment, the credit card number is previously associated with the vehicle such that the credit card number is not needed. The toll collection application service **5300** completes the transaction. According to these embodiments, the moving vehicle **110** does not have to stop or slow down to pay a toll.

[0293] For example, moving vehicle $\mathbf{110}_1$ enters the radio coverage range of AP1 $\mathbf{330}_1$, the toll scanning device detects the moving vehicle $\mathbf{110}_1$ and relays the detection to RSU1 $\mathbf{100}_1$. The toll collection application service **5300** sends a toll collection packet to the moving vehicle $\mathbf{110}_1$ through AP1 $\mathbf{330}_1$. The moving vehicle $\mathbf{110}_1$ sends a response, including identification information to the RSU1 $\mathbf{100}_1$, which forwarded the response to the toll collection application service **5300**. The toll collection application service **5300** completes the transaction and stores the transaction in the backbone **200**. The toll scanning device can be located in any of the APs **330**.

[0294] The invention has been described herein with reference to a particular exemplary embodiment. Certain alterations and modifications may be apparent to those skilled in the art, without departing from the scope of the invention. The exemplary embodiments are meant to be illustrative, not limiting of the scope of the invention, which is defined by the appended claims.

1. A method for routing packets of information between nodes within a local peer group in a wireless ad-hoc network comprising the steps of:

(a) receiving a first control packet including at least one routing parameter from a group header node;

(b) updating a routing table based upon said at least one routing parameter;

(c) receiving a second control packet including at least one additional routing parameter from a group node within said local peer group;

(d) updating said routing table based upon said at least one additional routing parameter;

(e) generating a forwarding table from said routing table when both of said updated steps are completed.

2. The method for routing packets of information according to claim **1**, wherein step (b) further comprises the sub-step of determining if said first control packet is in sequence using a sequence number.

3. The method for routing packets of information according to claim **2**, wherein step (b) is only performed if said first control packet is determined to be in sequence.

4. The method for routing packets of information according to claim **1**, wherein said at least one routing parameter includes a group list, hop count and next hop to said group header.

5. The method for routing packets of information according to claim **4**, wherein said step (b) further includes the steps of:

(i) modifying a destination list based upon said group list;

(ii) initializing a next hop to destination for all destinations except the immediate relay node that directly related said first control packet in said destination list as said group header; and

(iii) modifying said next hop to said group header as said immediate relay node.

6. The method for routing packets of information according to claim **1**, wherein step (b) farther comprises the sub-step of determining if said first control packet is new using a sequence number, wherein said first control packet is not new, said updating step includes the sub-steps of:

updating only a next hop for a destination node that corresponds to said immediate relay node.

7. The method for routing packets of information according to claim **1**, wherein step (d) further comprises the step of:

(i) determining a source for said second control packet;

(ii) determining a direct sender of said second control packet;

(iii) modifying a next hop for said source via said direct sender based upon said at least one additional routing parameter in said second control packet; and

(iv) modifying said next hop for said direct sender based upon said at least one additional routing parameter in said second control packet.

8. The method for routing packets of information according to claim **1**, where said forwarding table is used for routing said packets of information.

9. The method for routing packets of information according to claim **1**, wherein after reception of said first control packet, a node increments a hop count value field in said first control packet and inserts said node's identification into a next hop to said group header field in said first control packet.

10. The method for routing packets of information according to claim **9**, wherein said node forwards said first control packet after performing said incrementing and insertion.

11. The method for routing packets of information according to claim **10**, wherein after reception of said second control packet, a node forwards said second control packet towards said group header.

12. The method for routing packets of information according to claim **1**, wherein steps (a)-(e) are performed by all group nodes in the local peer group.

13. A routing method for routing packets of information between nodes within a local peer group in a wireless ad-hoc network comprising:

determining a type of control packet that is received by a node;

determining if said control packet is received by said node in sequence; and

updating a routing table based upon information contained in said control packet if said control packet is in sequence

wherein said determining if said control packet is received by said node in sequence is based upon a comparison of a sequence number value contained in said control packet with a sequence number stored in a memory, a control packet is received in sequence if said received sequence number value is greater than said sequence number stored in the memory.

14. The routing method according to claim **13**, wherein said type of control packet is a heartbeat control packet or a membership report.

15. The routing method according to claim **14**, wherein said method further includes deciding whether said node is a group header or a group node.

16. The routing method according to claim **15**, wherein if said node is said group node and the type of control packet is said heartbeat control packet, said updating step including modifying said routing table to include all members of a group membership list which is contained in said heartbeat control packet.

17. (canceled)

18. A method of processing an incoming packet by a node in an ad-hoc network comprising the steps of:

receiving the incoming packet at the node;

determining if the incoming packet is destined for the node;

determining a next hop to destinations based upon reading an entry in a routing table, if the incoming packet is not destined for said node;

selecting a relay node from a plurality of nodes based on the willingness of said plurality of nodes, the willingness being determined based upon a reception of a periodically broadcast status message; and

relaying the incoming packet to said next hop to destination through said relay node.

19. The method of processing an incoming packet according to claim **18**, wherein if the incoming packet is destined for said node, the node processes and consumes the incoming packet.

20. A method for routing a multicast message in an ad-hoc wireless network comprising the steps of:

receiving the multicast message for forwarding;

determining if a multicast group destination for the multicast message is in a multicast forwarding table;

determining if the multicast message has been previously forwarded;

forwarding the multicast message if it is determined that the multicast message was not previously forwarded and if it is determined that the multicast group destination is in the multicast forwarding table; and

adding the multicast message to a sent list after the multicast message is sent.

21. The method for routing a multicast message according to claim **20**, further comprising the step of: determining if the multicast message is in a transmission queue, wherein if the multicast message is not in the transmission queue, the multicast message is added to the transmission queue for forwarding, and if the multicast message is in the transmission queue, the multicast message is discarded.

22. The method for routing a multicast message according to claim **20**, further comprising the steps of:

selecting a transmission channel for each node having the multicast group destination listed in the multicast forwarding table; and

selecting a reception channel, for each node having the multicast group destination listed in the multicast forwarding table.

23. The method for routing a multicast message according to claim **20**, wherein the multicast forwarding table is generated based upon a method comprising:

assigning a classification for each node within a local peer group;

determining a hop count from a group header for each node, the group header is a node selected from all nodes within the local peer group;

collecting multicast membership information; and

selecting forwarding nodes in a mesh for a multicast group based upon the collected multicast membership information and hop count from group header.

24. The method for routing a multicast message according to claim **23**, wherein each selected forwarding node stores a multicast group identification in the multicast forwarding table.

25. The method for routing a multicast message according to claim **23**, wherein the classification hop count from group header and multicast membership information is broadcast from the group header to other nodes within the local peer group.

26. The method for routing a multicast message according to claim **20**, wherein the multicast routing table is generated based upon a membership report including multicast membership information relayed to a group header, all nodes relaying the membership report to the group header from a multicast member becomes forwarding nodes for a multicast group that includes the multicast member, each forwarding node records the multicast group destination in the multicast forwarding table.

27. The method for routing a multicast message according to claim **26**, wherein a number of forwarding nodes for a multicast group is adjusted by the group header based upon the hop count from the group header for each multicast member.

28. The method for routing a multicast message according to claim **27**, wherein said adjustment prunes all forwarding nodes between the group header and a multicast member determined to be the closest multicast member of a specific multicast group to the group header, and prunes itself.

29. The method for routing a multicast message according to claim **28**, wherein when a forwarding node is pruned, the forwarding node deletes the multicast group destination corresponding to the pruned multicast group, from the multicast forwarding table.

30. The method for routing a multicast message according to claim **23**, wherein the forwarding node becomes a non-forwarding node for a multicast group when a preset timer expires without receiving a membership report including the multicast membership information corresponding to the multicast group.

31. The method for routing a multicast message according to claim **20**, further comprising the steps of:

storing the sent multicast message in memory for a predetermined time;

detecting if the sent multicast message is received from a neighboring forwarding node within the predetermined time; and

repeating the forwarding step if the sent multicast message is not detected within the predetermined time, wherein the multicast message is discarded from memory if the sent multicast message is detected within the predetermined time/

32. The method for routing a multicast message according to claim **31**, further comprising the steps of:

counting a number of times that the forwarding step is repeated;

comparing the counted number of times with a preset threshold value; and

discarding the multicast message if the counted number of times is greater than the preset threshold.

33. The method for routing a multicast message according to claim **22**, wherein the transmission and reception channels are selected to alternate.

34. The method for routing a multicast message according to claim **33**, wherein the transmission and reception channels are selected to alternate in a single alternate pattern.

35. The method for routing a multicast message according to claim **33**, wherein each node that is selected to be a forwarding node, sets its transmission and reception channels to said single alternate pattern based upon a reference transmission and reception channel included in a heartbeat control packet from a group header and a hop count from group header also included in said heartbeat control packet.

36.-**38**. (canceled)

39. A wireless communication device comprising:

means for receiving the multicast message for forwarding;

means for determining if a multicast group destination for the multicast message is in a multicast forwarding table;

means for determining if the multicast message has been previously forwarded;

means for forwarding the multicast message if it is determined that the multicast message was not previously forwarded and if it is determined that the multicast group destination is in the multicast forwarding table; and

means for adding the multicast message to a sent list after the multicast message is sent.

40. The wireless communication device of claim **39**, further comprising:

means for storing said multicast forwarding table and said sent list.

41. The wireless communication device of claim **39**, further comprising:

means for determining if a new multicast message has been previously sent; means for discarding said new multicast message if a new multicast message has been previously sent;

means for determining if said new multicast message is in a transmission queue; and

means for removing a multicast message from the transmission queue if a new multicast message has been previously sent and is in the transmission queue.

42. A wireless communication device of claim **39**, wherein said wireless communication device is installed into a moving vehicle.

43. A wireless communication device for processing an incoming packet in an ad-hoc network, comprising:

means for receiving the incoming packet;

means for determining if the incoming packet is destined for the wireless communication device;

means for determining a next hop to destinations based upon reading an entry in a routing table, if the incoming packet is not destined for said wireless communication device;

means for selecting a relay node from a plurality of nodes based on the willingness of the plurality of nodes, the willingness being determined based upon a reception of a periodically broadcast status message; and

means for relaying the incoming packet to said next hop to destinations through said relay node.

44. A wireless communication device of claim **43**, wherein said wireless communication device is installed into a moving vehicle.

45. A computer readable medium comprising a set of computer readable instructions capable of being executed by at least one processor in a wireless communication device of a moving vehicle for controlling said at least one processor to route messages, the routing comprising the steps of:

receiving a multicast message for forwarding;

determining if a multicast group destination for the multicast message is in a multicast forwarding table;

determining if the multicast message has been previously forwarded;

forwarding the multicast message if it is determined that the multicast message was not previously forwarded and if it is determined that the multicast group destination is in the multicast forwarding table; and

adding the multicast message to a sent list after the multicast message is sent.

46. The computer readable medium comprising a set of computer readable instructions capable of being executed by at least one processor in a wireless communication device of a moving vehicle for controlling said at least one processor to route messages of claim **45**, further comprising instructions for executing the steps of:

receiving an incoming packet;

determining if the incoming packet is destined for said node;

determining a next hop to destinations based upon reading an entry in a routing table, if the incoming packet is not destined for said node; and

relaying the incoming packet to said next hop to destination.

47. The method of processing an incoming packet according to claim **18**, wherein the periodically broadcast status message indicates willingness for only a specific type of message.

48. The method of processing an incoming packet according to claim **18**, further comprising receiving the periodically broadcast status message from a predetermined sub-set of the plurality of nodes.

* * * * *