No. 730,280. PATENTED JUNE 9, 1903.

R. J. MEFFORD.

ORE OR DREDGING BUCKET.

APPLICATION FILED AUG. 4, 1902.

NO MODEL.

Fig. 1.

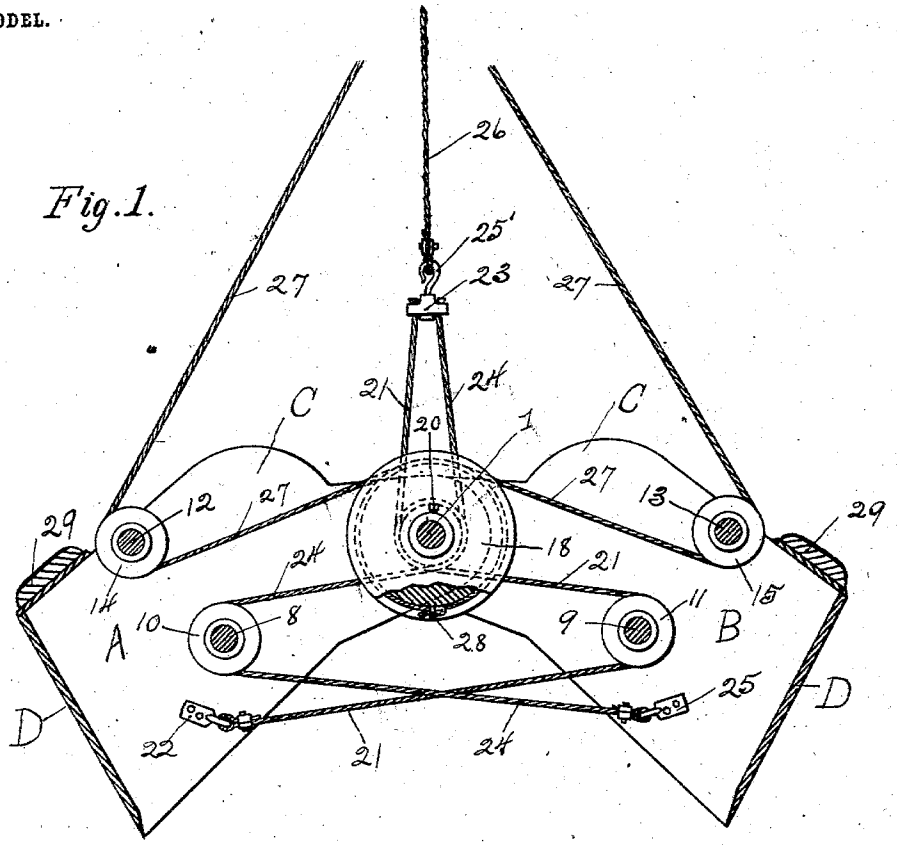

Fig. 2.

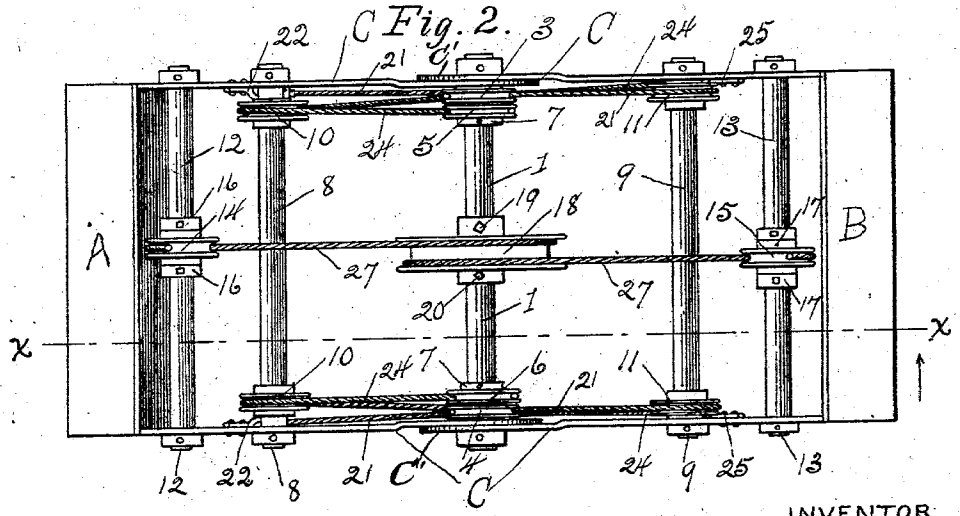

WITNESSES:

David C. Walter

Emil J. Vogelsang

INVENTOR.

Robert J. Mefford

By Owen & Owen,

His Attorneys.

THE NORRIS PETERS CO., PHOTO-LITHO., WASHINGTON, D. C.

No. 730,280. Patented June 9, 1903.

UNITED STATES PATENT OFFICE.

ROBERT J. MEFFORD, OF TOLEDO, OHIO.

ORE OR DREDGING BUCKET.

SPECIFICATION forming part of Letters Patent No. 730,280, dated June 9, 1903.

Application filed August 4, 1902. Serial No. 118,294. (No model.)

To all whom it may concern:

Be it known that I, ROBERT J. MEFFORD, a citizen of the United States, residing at Toledo, in the county of Lucas and State of Ohio, have invented certain new and useful Improvements in Ore or Dredging Buckets; and I do hereby declare the following to be a full, clear, and exact description of the invention, such as will enable others skilled in the art to which it appertains to make and use the same, reference being had to the accompanying drawings, and to the letters and figures of reference marked thereon, which form a part of this specification.

My invention relates to improvements in buckets of what is commonly known as the "clam-shell" type, and is more particularly designed for the purpose of hoisting ore and transferring the same to vessels or other receptacles, but may also be used for dredging and other purposes for which this class of buckets is adapted.

The object of my invention is to provide a bucket of the class described that is simple and durable in its construction and may be easily and quickly loaded, that has its hoisting-cables so arranged that the lifting strain is borne by auxiliary shafts or axles and not by the main or central shaft, and that has simple and efficient means for causing its scoops to diverge from each other and the load to be discharged therefrom.

While the essential features of my invention are necessarily susceptible of modification, the preferred embodiment thereof is illustrated in the accompanying drawings, in which—

Figure 1 is a vertical cross-sectional view of my improved bucket, taken on the line *x x* in Fig. 2 and showing it in partially open position; and Fig. 2 is a top plan view of the same, showing the cables in section and the arrangement of the pulleys.

Similar letters and figures of reference indicate similar parts in both figures of the drawings.

A and B designate the scoops or jaws, which are preferably made of steel and of any suitable shape, but preferably that shown in the drawings. The said scoops A and B are pivotally connected to each other by the transverse shaft 1, which passes through apertures provided in the upper lapped portions of the sides C or ears C'. The grooved pulleys 3, 4, 5, and 6 are loosely mounted on the shaft 1 adjacent to the inner sides of the said scoops and are retained from lateral movement thereon by the annular collars 7, which are rigidly secured to the said shaft.

8 and 9 designate transverse shafts rigidly secured within suitable apertures provided in the sides of the scoops A and B and are for the purpose of supporting the grooved pulleys 10 and 11, which are loosely mounted adjacent to said sides and prevented from lateral movement on said shafts by suitable collars secured thereon. It will be noticed that the pulleys 10 and 11 aline with the pulleys 3 and 4 and 5 and 6, respectively, the pulleys 10 being slightly offset from the sides of the scoop A on the shaft 8. Near the upper and outer portions of the said scoops are secured the transverse shafts 12 and 13, on which are loosely mounted the grooved pulleys 14 and 15. These pulleys are centrally mounted on said shafts 12 and 13, being retained from lateral movement by the collars 16 and 17, and are in alinement with the enlarged drum 18, which is rigidly mounted at the center of the shaft 1 by means of the binding-bolts 19 and 20 passing through threaded apertures in its hub and engaging with the said shaft. Having the pulleys and drum suitably mounted on their respective shafts within the said scoops A and B, it now remains to arrange thereon the cables employed in the opening and closing of my said bucket. The cables 21, which are two in number and have their lower ends secured to the clamps or clevises 22, riveted to opposite sides of the scoop A, are carried over to engagement with the pulleys 11, mounted within the scoop B, then back to engagement with the opposite sides of the pulleys 3 and 4 and upward to the transverse bar 23, to which they are secured at either end in any suitable manner. The ends of the cables 24 are secured in like manner to the clamps or clevises 25 on the scoop B, carried across to engagement with the pulleys 10, then back to engagement with the opposite sides of the pulleys 5 and 6 and up to and secured to the ends of the transverse bar 23 in the

same manner as the cables 21. The transverse bar 23 extends the width of the bucket, thus enabling its ends, to which the cables 21 and 24 are attached, to be in perpendicular alinement with the pulleys 3, 4, 5, and 6, thereby insuring a direct vertical pull upon the said cables. To the upper surface of the bar 23 and midway between its ends I secure the hook 25′ to enable the looped end of the hoisting-cable 26 to be easily attached or detached therefrom.

By arranging the cables 21 and 24 in the manner above described the strain occasioned by the lifting of heavy loads is distributed to several parts of the bucket and is not borne alone by the central or main shaft 1, as is the case in most buckets of this class, the principal lifting strain being brought to bear upon the auxiliary shafts 8 and 9 and the clevises 22 and 25.

The ends of the release or dumping cable 27 are secured to the under side of the rigid drum 18 by means of the pin 28, from whence the cables are carried around the same in opposite directions, under the pulleys 14 and 15, and upward to the machinery to which they are attached. It will thus be obvious that in the operation of loading my bucket the same is dropped in wide-open position upon the pile of ore or other matter, and the bottoms D D, which when the bucket is open are in substantially a vertical position, are driven by the weight and momentum gained by the bucket in its fall and embedded in the ore. The dumping-cables 27 are then slackened, the hoisting-cable 26 tightened, and the scoops A and B drawn together by the cross-pull exerted upon them by the cables 21 and 24 being secured and operated in the manner shown. When the loaded bucket is hoisted and swung to the desired position, the hoisting-cables 21 and 24 are slightly released and the dumping-cables 27 drawn taut, thus causing the bucket to open by reason of the pull exerted upon the pulleys 14 and 15 and the central or pivotal portion of the bucket to be simultaneously lowered and the load discharged, after which the bucket is swung to a position over the ore pile and again dropped in open position thereon.

In order to more perfectly facilitate the loading of my bucket, I secure the weights 29 to the upper outer portions of the scoops A and B in direct alinement with the pull exerted upon the clamps 22 and 25 by the cables 21 and 24 in their closing and lifting movements. It will be obvious that the weights 29 perform a double function—that of causing the bottoms or cutting edges of the scoops A and B to be more forcibly driven into the ore when dropped thereon and that of causing the said scoops when being closed to make substantially a circular cut into the pile of ore and lessen their tendency to be withdrawn before properly filled, by reason of the pull exerted upon the hoisting-cables in the closing movement.

Having thus described my invention, what I claim as new, and desire to secure by Letters Patent, is—

1. The combination, in a hoisting-bucket composed of two parts, of a shaft forming a common pivot for said parts, a series of pulleys and a drum mounted on said shaft, two sets of shafts secured within said parts, pulleys mounted on said shafts, cables secured to said drum and engaging with and extending upward from the pulleys on one of said sets of shafts, a superimposed transverse bar, a set of cables attached to each of said parts, each of said sets adapted to engage with the pulleys on the remaining shaft on the opposite part to which said cables are attached and with the pulleys on said pivotal shaft and extend upward and be attached to said transverse bar.

2. A hoisting-bucket comprising two parts, a shaft interposed between the upper portions of the said parts and forming their common pivot, a series of pulleys and a drum on said shaft, shafts having pulleys thereon mounted in each of said parts, dumping-cables secured to said drum and engaging with said latter pulleys, a second set of shafts mounted in said parts, pulleys on said shafts, a superimposed transverse bar, hoisting-cables attached to said bar, said cables adapted to engage with the pulleys on said first and last mentioned shafts and be attached to the lower inner portions of the opposite parts, and when power is transmitted to them to exert a cross-pull on said parts and cause the same to close or be retained in closed position.

3. The combination, with a hoisting-bucket comprising two pivotally-connected parts, and means for closing said parts, of shafts mounted in each of said parts, pulleys on said shafts, cables engaging with said pulleys and having their lower ends secured to a central point in said bucket, and said cables adapted, when power is applied to them, to cause said parts to open.

4. The combination, with a hoisting-bucket comprising two pivotally-connected parts, and means for closing said parts, of a drum secured between the sides and near the upper portions of said parts, shafts mounted in said parts at an angle to said drum, pulleys on said shafts, and cables engaging with said pulleys and having their ends secured to said drum, and adapted, when power is applied, to cause said parts to open and be retained in that position a desired length of time.

5. The combination, with a hoisting-bucket comprising two parts, a shaft pivotally connecting said parts, and means for opening the parts, of a series of pulleys mounted on said shaft, an independent series of pulleys mounted within each of said parts, cables secured at opposite points to said parts and adapted to cross each other and engage with the opposite independent pulleys and the pulleys on said shaft, means above said parts to which said cables are attached, and a hoisting-cable

attached to said means and adapted to transmit power to said cables and cause said parts, when in open position, to be closed and said bucket hoisted.

6. The combination, with a hoisting-bucket comprising two pivotally-connected parts, and provided with means for closing and means for opening said parts, of a weight secured to each of said parts directly above their cutting edges, and said weights adapted to cause the parts to remain embedded in the ore until the bucket is closed.

7. In a hoisting-bucket composed of two parts, a shaft pivotally connecting said parts, cables engaging with opposite sides of said shaft, each of said cables connected to one of said parts and having engagement with the other part in such manner as to cause a cross-pull to be exerted thereon and close the same when power is applied to said cables, and means provided for causing said parts to open.

8. The combination in a hoisting-bucket composed of two parts, of sides on said parts, said sides having their upper portions lapped upon the sides of the adjacent part, a shaft mounted in apertures provided in said lapped portions and pivotally connecting the same, means, comprising a drum on said shaft, pulleys mounted on said parts at a distance from said drum, and cables secured to said drum and engaging with and extending upwardly from said pulleys, provided for opening said parts when closed, and means for closing the same and retaining a load therein.

9. The combination in a hoisting-bucket composed of two parts, each of said parts having the upper portions of their sides lapped upon the sides of the adjacent part, of a shaft mounted in the lapped portions of said parts and pivotally connecting the same, means provided for closing and hoisting said bucket, said means comprising pulleys mounted on said shaft, independent pulleys mounted within each of said parts, and cables secured to each of said parts and arranged in such manner as to engage with the pulleys on the opposite parts and the pulleys on said shaft and extend upwardly therefrom, a hoisting-cable connected to said cables, and means provided for opening said bucket.

10. The combination, with a hoisting-bucket comprising two pivotally-connected parts and means for opening said parts, of means for closing said parts, said means comprising pulleys mounted in axial alinement with the pivotal point of said parts, independent pulleys mounted on each of said parts, and cables secured to each of said parts and arranged in such manner as to engage with the pulleys on the opposite parts and said first-mentioned pulleys and exert a cross-pull on the said parts and close the same when the said bucket is hoisted.

11. The combination with a hoisting-bucket comprising two pivotally-connected parts, and means for closing said parts, of pulleys mounted in each of said parts, and a cable, said cable having a substantially central point of engagement with said parts and engaging with said pulleys in such manner as to cause said parts to be forced open as pressure is applied thereto.

In testimony whereof I have signed my name to this specification in the presence of two subscribing witnesses.

ROBERT J. MEFFORD.

Witnesses:
EMIL J. VOGELSANG,
CHAS. W. OWEN.