July 13, 1965 S. DUCKMAN ETAL 3,194,234

POSTOPERATIVE BINDER

Filed Dec. 18, 1963

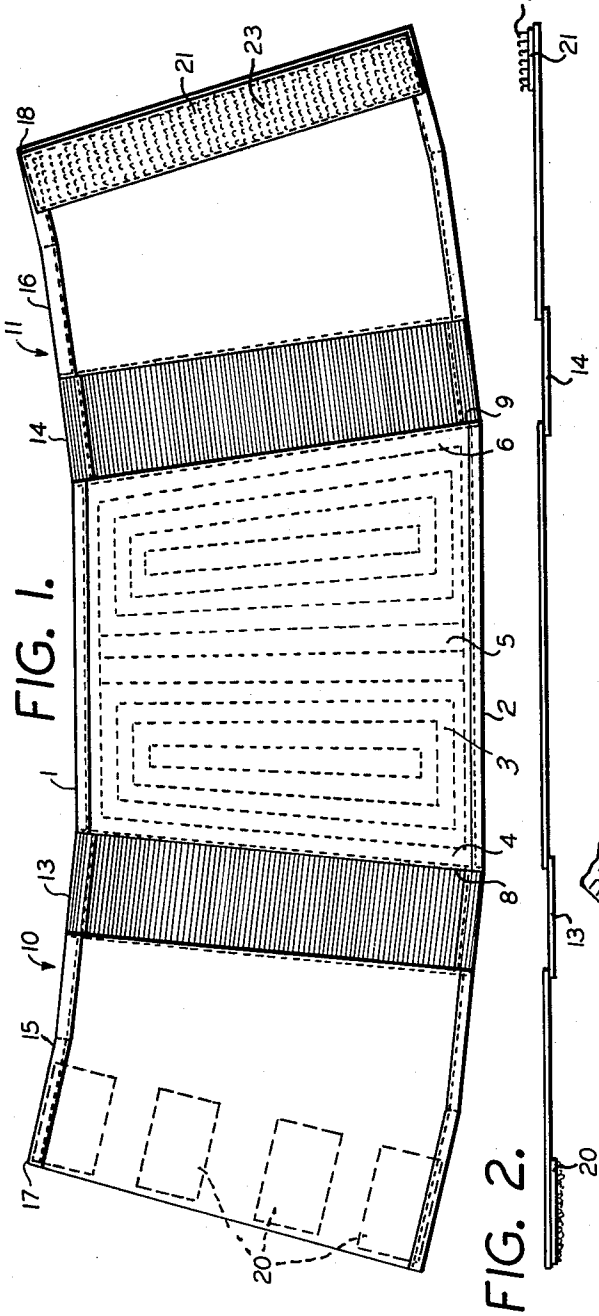

FIG. 1.

FIG. 2.

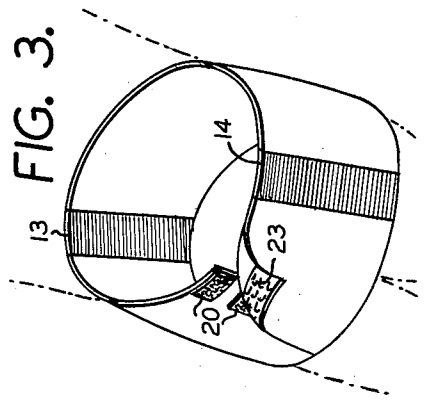

FIG. 3.

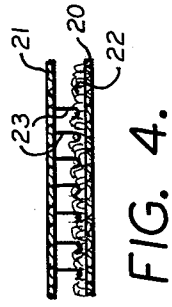

FIG. 4.

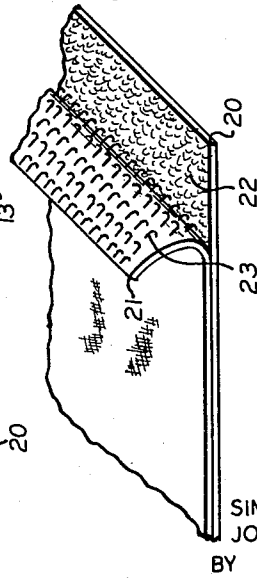

FIG. 5.

INVENTORS
SIMON DUCKMAN
JOHN A. LILLA
BY

ATTORNEY.

United States Patent Office 3,194,234 Patented July 13, 1965

3,194,234

POSTOPERATIVE BINDER

Simon Duckman, 307 Beach 146th St., Neponsit, and John A. Lilla, 23—35 29th Ave., Astoria, N.Y.

Filed Dec. 18, 1963, Ser. No. 331,559
7 Claims. (Cl. 128—95)

This invention relates to postoperative binders and in particular refers to postoperative binders which are self-supporting and require no strings, lace, pins, hooks and other hardware type fasteners and may be easily manipulated by the patient with a minimum of assistance from others.

In postoperative binders, as presently made and used, the binder has associated therewith a series of strings and to present him with a comfortable feeling, which a tight support about the abdomen of the patient. Patients, after undergoing surgery in the abdominal sector, require support for their muscles. To reassure the patient and to present him with a comfortable feeling, which he would not otherwise be conscious of without such support, a postoperative binder is provided for him. However, such binders, as stated, have a large plurality of strings and tails which of necessity take considerable time to apply and adjust before the patient is completely supported. Further, such binders, when adjustments are to be made, are difficult to manipulate and alter. Further, if a change is necessary the whole binder must be unlaced and a new binder applied with the same tieing procedure applied. All of this is not only time-consuming but also discomforting to the patient.

To overcome these shortcomings and limitations it is contemplated herein to provide a binder void of any laces and in which the tieing procedure is completely eliminated. This is accomplished by first producing an expandable type binder so as to suitably fit any size patient and then providing at opposing end of the binder a pile-like material which when in contact will adhere and provide a secure adhesion and bond not easily broken. The adhesion is very strong in shear and separation may be readliy accomplished by applying opposing forces orthogonal to the adhesion surfaces, a peeling-like action.

It is therefore an object of the invention to provide improved post-operative binders.

Another object of the invention is to provide a post-operative binder which eliminates strings, tails, pins, drawstrings, hooks, zippers and other attending hardware necessary to effect fastening.

Another object of the invention is to provide a post-operative binder which can be easily and readily applied and/or adjusted and requires a minimum of time and effort to cause its adhesion to a patient.

A still further object of the invention is to provide a postoperative binder which is simple, efficient, rugged and economical to make and operate.

Another object of the invention is to provide a post-operative binder which may readily be provided with support braces, ribs and other reinforcing structural members for rendering greater support and comfort to the patient after abdominal surgery.

Other objects and advantages will become apparent from a reading of the specifications and a study of the accompanying drawings, and wherein

FIGURES 1 and 2 are plan and elevational views of the postoperative binder when expanded according to an embodiment of the invention.

FIGURE 3 shows the postoperative binder when attached to the patient.

FIGURE 4 shows the adhesive portions of the binder when bonded together.

FIGURE 5 shows in some detail the fastener characteristic of the binder.

Now referring to the drawings, wherein like parts will be given the same reference number, there is shown particularly in FIGURES 1 and 2 a postoperative binder comprising a fabric body or central panel **1** substantially trapezoidal in configuration and having a fabric base **2** coated wtih a flannel cloth **3** with intervening pockets **4**, **5** and **6** disposed along the sloping sides **8** and **9** and midway therebetween respectively. The pockets so arranged are conveniently fitted with metal reinforcing ribs to stiffen the binder when in operative condition. The sloping sides **8** and **9** of the center panel have attached thereto sides **10**, **11** composed of elastic bands **13** and **14** and fabric and panels **15**, **16**, the elastic bands being disposed intermediate the end panels and sloping sides of the central panel.

The end panels **15** and **16** each have at their outer extremities **17**, **18** along the fastening edges thereof remote from the center panel, but on reverse sides of the end panel surfaces, a bonding material so fabricated as to create a bonding or fastening effect when the said bonding materials at the edges of the end panels come in pressure contact with each other. When the end panels come in contact along the bonding material surfaces a bonding effect is created which is secure and firm and not subject to unfastening when the end panels are pulled apart as in shear. To remove the bond or to unfasten the end panel edges, all that is required is to apply a peeling-like effect to the bonded surface and the end panels will become disengaged.

The fastener itself is shown in FIGURES 4 and 5 and shows in particular the manner in which the bond is created between the two surfaces when in contact. There is shown dual tapes **20**, **21**, each woven with nylon or some other suitable fibers, the fibers being closed loops **22**, as on tape **20** and hooks **23** as on tape **21**. The nylon hooks were originally woven into regular rows and columns of closed loops and then subsequently cut to form the hooks **23** as shown. Further, the nylon hooks are relatively heavier gauge than the loops and consequently are fewer in number for the same size area of contact between the tapes. When the tapes **20** and **21** are placed in pressure contact with each other, the hooks **23** will engage the loops **22**, and since the number of locking loops and hooks become quite appreciable because of the gauges used in the nylon fibers, the effect is to have a very strong bond between opposing tapes which become very strong in shear and no appreciable pulling apart will unlock the bond. To unlock or unfasten the bond, a peeling type of action is necessary since this causes gradual release of the hooks from the loops. This total procedure may be effected any number of times without any appreciable wear and reduction of the bonding effect created by the hooks and loops of the nylon fibers. It may be appreciated that although nylon fibers have been specified, other synthetic type fibers may be used which have the same durable and stiffening qualities presented by the nylon fibers.

In FIGURE 3 there is shown the postoperative binder when attached to a patient. It can be seen from this figure the manner in which the binder may be secured and unsecured without any inconvenience or discomfort to the patient.

It may be appreciated that certain modifications and changes to the binder may be made without detracting from the true purpose and intent of the invention.

Having defined the invention, what is claimed is:

1. A postoperative binder comprising:

(a) a central fabric panel having reinforcement members interposed thereon,

(b) a pair of fabric end panels, spaced apart from said central panel,

(c) a pair of elastic panels each interposed between

the central panel and end panels and secured thereto along their respective edges, and

(d) contact bonding means on opposing surfaces of said end panels at the outer extremities thereof remote from said central panel and disposed to fasten the said end panels upon contact to form a postoperative binder.

2. A postoperative binder according to claim 1 and wherein said bonding means includes interlocking fiber members attached to and woven into said opposing surfaces and disposed to become secured upon contact of the said surfaces.

3. A postoperative binder according to claim 2 and wherein the said fiber members are hook-shaped on one surface and loop-shaped on the other surface to permit the engagement of said hook and loop when in surface contact.

4. A postoperative binder according to claim 3 and wherein the hook-shaped fiber is substantially relatively heavier gauged than the loop-shaped fiber.

5. A postoperative binder according to claim 1 and wherein said reinforcement members are metal rib elements disposed to support the anatomy portions of the patient.

6. A postoperative binder comprising:

(a) a central fabric panel having sloping ends,

(b) a pair of fabric end panels,

(c) a pair of elastic panels each interposed between the central panel and end panels and secured thereto along their respective edges, and

(d) bonding means on opposing surfaces of said end panels at the outer extremities thereof remote from said central panel and disposed to fasten the said end panels to form a postoperative binder when in contact with each other.

7. A postoperative binder according to claim 1 and wherein said central panel has a quilted flannel coating disposed thereon.

References Cited by the Examiner

UNITED STATES PATENTS

1,577,666	3/26	Walter	128—96
2,896,634	7/59	Beder	128—579
3,054,400	9/62	Lizio	128—163
3,086,529	4/63	Munz et al.	128—96

ADELE M. EAGER, *Primary Examiner.*