(12) INTERNATIONAL APPLICATION PUBLISHED UNDER THE PATENT COOPERATION TREATY (PCT)

(19) World Intellectual Property Organization
International Bureau

(43) International Publication Date
16 January 2025 (16.01.2025)

WIPO | PCT

(10) International Publication Number
WO 2025/012934 A1

(51) International Patent Classification:
H04W 64/00 (2009.01) *H04W 24/10* (2009.01)
H04W 4/029 (2018.01)

(21) International Application Number:
PCT/IN2024/050788

(22) International Filing Date:
12 June 2024 (12.06.2024)

(25) Filing Language: English

(26) Publication Language: English

(30) Priority Data:
202321045821 07 July 2023 (07.07.2023) IN

(71) Applicant: **JIO PLATFORMS LIMITED** [IN/IN]; Office - 101, Saffron, Nr. Centre Point, Panchwati 5 Rasta, Ambawadi, Ahmedabad - 380006, Gujarat (IN).

(72) Inventors: **SINGH, Mukesh**; Office - 101, Saffron, Nr. Centre Point, Panchwati 5 Rasta, Ambawadi, Ahmedabad - 380006, Gujarat (IN). **BHATNAGAR, Aayush**; Office - 101, Saffron, Nr. Centre Point, Panchwati 5 Rasta, Ambawadi, Ahmedabad - 380006, Gujarat (IN). **AGRAHARI, Nilesh**; Office - 101, Saffron, Nr. Centre Point, Panchwati 5 Rasta, Ambawadi, Ahmedabad - 380006, Gujarat (IN). **DHIMAN, Anshul**; Office - 101, Saffron, Nr. Centre Point, Panchwati 5 Rasta, Ambawadi, Ahmedabad - 380006, Gujarat (IN). **GHAG, Arpita Jaywant**; Office - 101, Saffron, Nr. Centre Point, Panchwati 5 Rasta, Ambawadi, Ahmedabad - 380006, Gujarat (IN).

(74) Agent: **SAHNEY, Garima**; SAIKRISHNA & ASSOCIATES ADVOCATES, B-140, Sector 51, Noida-201301, Uttar Pradesh (IN).

(81) Designated States *(unless otherwise indicated, for every kind of national protection available)*: AE, AG, AL, AM, AO, AT, AU, AZ, BA, BB, BG, BH, BN, BR, BW, BY, BZ, CA, CH, CL, CN, CO, CR, CU, CV, CZ, DE, DJ, DK, DM, DO, DZ, EC, EE, EG, ES, FI, GB, GD, GE, GH, GM, GT, HN, HR, HU, ID, IL, IN, IQ, IR, IS, IT, JM, JO, JP, KE, KG, KH, KN, KP, KR, KW, KZ, LA, LC, LK, LR, LS, LU, LY, MA, MD, MG, MK, MN, MU, MW, MX, MY, MZ, NA, NG, NI, NO, NZ, OM, PA, PE, PG, PH, PL, PT, QA, RO, RS, RU, RW, SA, SC, SD, SE, SG, SK, SL, ST, SV, SY, TH, TJ, TM, TN, TR, TT, TZ, UA, UG, US, UZ, VC, VN, WS, ZA, ZM, ZW.

(84) Designated States *(unless otherwise indicated, for every kind of regional protection available)*: ARIPO (BW, CV, GH, GM, KE, LR, LS, MW, MZ, NA, RW, SC, SD, SL, ST, SZ, TZ, UG, ZM, ZW), Eurasian (AM, AZ, BY, KG, KZ, RU, TJ, TM), European (AL, AT, BE, BG, CH, CY, CZ, DE, DK, EE, ES, FI, FR, GB, GR, HR, HU, IE, IS, IT, LT, LU, LV, MC, ME, MK, MT, NL, NO, PL, PT, RO, RS, SE, SI, SK, SM, TR), OAPI (BF, BJ, CF, CG, CI, CM, GA, GN, GQ, GW, KM, ML, MR, NE, SN, TD, TG).

Declarations under Rule 4.17:
— *as to applicant's entitlement to apply for and be granted a patent (Rule 4.17(ii))*
— *of inventorship (Rule 4.17(iv))*

Published:
— *with international search report (Art. 21(3))*

(54) **Title:** METHOD AND SYSTEM FOR AUTOMATICALLY DETERMINING A LOCATION OF A USER EQUIPMENT

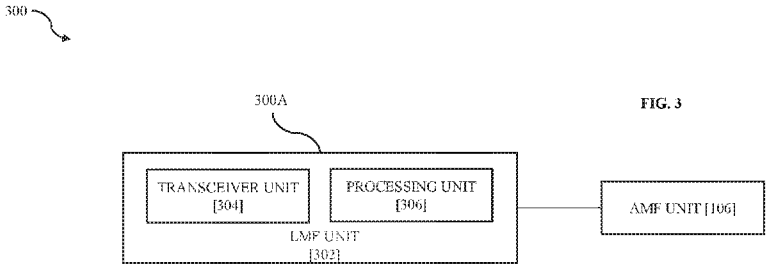

FIG. 3

(57) **Abstract:** The present disclosure relates to a method and a system for automatically determining a location of a UE [102], The present disclosure encompasses: receiving, a location request of the UE [102] comprising an NCGI value associated with a cell in a RAN serving the UE [102]; determining a target RAN vendor from a set of pre-stored RAN vendor based on the NCGI value; transmitting a first request; receiving a first response based on the first request, wherein the first response comprises one or more measurement parameters associated with the target RAN vendor; identifying at least a target pre-configured technique from a set of pre -configured techniques based on the one or more measurement parameters; automatically determining the location of the UE [102] associated with the location request based on at least the target pre-configured technique and the one or more measurement parameters.

WO 2025/012934 A1

METHOD AND SYSTEM FOR AUTOMATICALLY DETERMINING A LOCATION OF A USER EQUIPMENT

TECHNICAL FIELD

[0001] Embodiments of the present disclosure generally relate to network performance management systems. More particularly, embodiments of the present disclosure relate to methods and systems for automatically determining a location of a user equipment (UE).

BACKGROUND

[0002] The following description of the related art is intended to provide background information pertaining to the field of the disclosure. This section may include certain aspects of the art that may be related to various features of the present disclosure. However, it should be appreciated that this section is used only to enhance the understanding of the reader with respect to the present disclosure, and not as admissions of the prior art.

[0003] Wireless communication technology has rapidly evolved over the past few decades, with each generation bringing significant improvements and advancements. The first generation of wireless communication technology was based on analog technology and offered only voice services. However, with the advent of the second-generation (2G) technology, digital communication and data services became possible, and text messaging was introduced. Third-generation (3G) technology marked the introduction of high-speed internet access, mobile video calling, and location-based services. The fourth-generation (4G) technology revolutionized wireless communication with faster data speeds, better network coverage, and improved security. Currently, the fifth-generation (5G) technology is being deployed, promising even faster data speeds, low latency, and the ability to connect multiple devices simultaneously. With each generation, wireless communication technology has become more advanced, sophisticated, and capable of delivering more services to its users.

[0004] Existing solutions for determining a location of a user equipment (UE) lack a method to efficiently select an appropriate method based on the Location Services procedure supported at the Radio Access Network (RAN) end. The absence of a standardized approach often leads to a high failures and degradation in determining location accurately. However, recent advancements have attempted to address this issue by introducing an enhanced approach that allows for the calculation

of location with the best possible attempt. This is achieved by leveraging the received measurement response from the RAN, enabling location calculation, but these approaches are also not able to determine the location of the user equipment (UE) reliably and appropriately. Further, over the period of time various solutions have been developed to improve the performance of communication devices and to optimise location determination of a UE. However, there are certain challenges with existing solutions. Firstly, it fails to incorporate a method for selecting a method for determination of a location of UE based on the Location Services procedure that are supported at the Radio Access Network (RAN) end. This lack of method selection leads to inefficient and suboptimal performance, often resulting in higher probabilities of failures and degraded location accuracy. Additionally, the prior solution does not adequately address the potential for degradation in location accuracy, thereby diminishing the overall quality of location-based services.

[0005] Thus, there exists an imperative need in the art to provide system and method for automatically determining a location of a user equipment (UE).

SUMMARY

[0006] This section is provided to introduce certain aspects of the present disclosure in a simplified form that are further described below in the detailed description. This summary is not intended to identify the key features or the scope of the claimed subject matter.

[0007] An aspect of the present disclosure may relate to a method for automatically determining a location of a user equipment (UE). The method comprises receiving, by a transceiver unit at a Location Management Function (LMF) unit from an Access and Mobility Management Function (AMF) unit, a location request of the user equipment, wherein the location request at least comprises a New Radio Cell Global Identifier (NCGI) value associated with a cell in a radio access network (RAN) serving the user equipment (UE). The method further comprises determining, by a processing unit at the LMF unit, a target RAN vendor from a set of pre-stored RAN vendor based on the NCGI value. The method further comprises transmitting, by the transceiver unit from the LMF unit to the target RAN vendor, a first request. The method further comprises receiving, by the transceiver unit at the LMF unit from the target RAN vendor, a first response based on the first request, wherein the first response comprises one or more measurement parameters associated with the target RAN vendor. The method further comprises identifying, by the processing unit at the LMF unit, at least a target pre-configured technique from a set of pre-configured techniques associated with the target RAN vendor based on the one or more measurement parameters. The

method further comprises automatically determining, by the processing unit, the location of the user equipment (UE) associated with the location request based on at least the target pre-configured technique and the one or more measurement parameters.

[0008] In an exemplary aspect of the present disclosure, the first request is a NR Positioning Protocol A (NRPPa) request, and the first response is a NRPPa response.

[0009] In an exemplary aspect of the present disclosure, the automatically determining the location of the user equipment (UE) further comprises determining, by the processing unit at least a cell type associated with the target RAN vendor based on at least a New Radio Absolute Radio Frequency Channel Number (NRAFCN) value received in the first response.

[0010] In an exemplary aspect of the present disclosure, the one or more measurement parameters associated with the target RAN vendor received in the first response is at least one of a Reference Signal Received Power (RSRP) parameter, a timing advance parameter, and an angle of arrival parameter.

[0011] In an exemplary aspect of the present disclosure, the identifying the target pre-configured technique is further based on at least one parameter value associated with one of the one or more measurement parameters.

[0012] Another aspect of the present disclosure may relate to a system for automatically determining a location of a User Equipment (UE). The system comprises a transceiver unit and a processing unit connected to each other. The transceiver unit is configured to receive at a Location Management Function (LMF) from an Access and Mobility Management Function (AMF) unit, a location request of the user equipment (UE), wherein the location request at least comprises a New Radio Cell Global Identifier (NCGI) value associated with a cell in a Radio Access Network (RAN) serving the user equipment (UE). The processing unit is configured to determine at the LMF unit, a target RAN vendor from a set of pre-stored RAN vendor based on the NCGI value. The transceiver unit is further configured to transmit from the LMF unit to the target RAN vendor, a first request. The transceiver unit is further configured to receive at the LMF unit from the target RAN vendor, a first response based on the first request, wherein the first response at least comprises one or more measurement parameters associated with the target RAN vendor. The processing unit is further configured to identify, at the LMF unit at least a target pre-configured technique from a set of pre-configured techniques associated with the target RAN vendor based

on the one or more measurement parameters. The processing unit is further configured to automatically determine the location of the user equipment associated with the location request based on at least the target pre-configured technique and the one or more measurement parameters.

[0013] Yet another aspect of the present disclosure relates to a network equipment for automatically determining a location of a user equipment (UE) [102]. The network equipment comprising: a transceiver unit [304], wherein the transceiver unit [304] is configured to receive, at a Location management function (LMF) unit [302] from an Access and Mobility Management Function (AMF) unit [106], a location request of the user equipment (UE) [102], wherein the location request at least comprises a New Radio Cell Global Identifier (NCGI) value associated with a cell in a radio access network (RAN) [104] serving the user equipment (UE) [102]; a processing unit [306] connected at least to the transceiver unit [304], wherein the processing unit [306] is configured to determine, at the LMF unit [302], a target RAN vendor from a set of pre-stored RAN vendor based on the NCGI value; the transceiver unit [304] is further configured to: transmit, from the LMF unit [302] to the target RAN vendor, a first request; receive, at the LMF unit [302] from the target RAN vendor, a first response based on the first request, wherein the first response at least comprises one or more measurement parameters associated with the target RAN vendor; the processing unit [306] is further configured to: identify, at the LMF unit [302], at least a target pre-configured technique from a set of pre-configured techniques associated with the target RAN vendor based on the one or more measurement parameters; and automatically determine the location of the user equipment [102] associated with the location request based on at least the target pre-configured technique and the one or more measurement parameters.

[0014] Yet another aspect of the present disclosure may relate to a non-transitory computer readable storage medium storing instructions for automatically determining a location of a user equipment (UE), the instructions include executable code which, when executed by a one or more units of a system, causes: a transceiver unit of the system to receive at a location management function (LMF) unit from an Access and Mobility Management Function (AMF) unit, a location request of the user equipment (UE), wherein the location request at least comprises a New Radio Cell Global Identifier (NCGI) value associated with a cell in a radio access network (RAN) serving the user equipment (UE); a processing unit of the system, to determine at the LMF unit, a target RAN vendor from a set of pre-stored RAN vendor based on the NCGI value; the transceiver unit to transmit from the LMF unit to the target RAN vendor, a first request; the transceiver unit of the system to receive at the LMF unit from the target RAN vendor, a first response based on the first request, wherein the first response at least comprises one or more measurement parameters

associated with the target RAN vendor; the processing unit to identify at the LMF unit at least a target pre-configured technique from a set of pre-configured techniques associated with the target RAN vendor based on the one or more measurement parameters; the processing unit to automatically determine the location of the user equipment associated with the location request based on at least the target pre-configured technique and the one or more measurement parameters.

OBJECTS OF THE INVENTION

[0015] Some of the objects of the present disclosure, which at least one embodiment disclosed herein satisfies are listed herein below.

[0016] It is an object of the present disclosure to provide a system and method for determining a location of a user equipment (UE).

[0017] It is another object of the present disclosure to provide a system and a method for optimising location determination of a UE.

[0018] It is another object of the present disclosure to provide a solution that retrieves a set of different measurement parameter combination in response from one or more RAN vendors based on the NRPPa request from a LMF to the RAN vendor.

[0019] It is yet another object of the present disclosure to provide a solution to determine a set of instructions at the LMF based on the set of different measurement parameter combination and pre-configuration at LMF end.

DESCRIPTION OF THE DRAWINGS

[0020] The accompanying drawings, which are incorporated herein, and constitute a part of this disclosure, illustrate exemplary embodiments of the disclosed methods and systems in which like reference numerals refer to the same parts throughout the different drawings. Components in the drawings are not necessarily to scale, emphasis instead being placed upon clearly illustrating the principles of the present disclosure. Also, the embodiments shown in the figures are not to be construed as limiting the disclosure, but the possible variants of the method and system according to the disclosure are illustrated herein to highlight the advantages of the disclosure. It will be

appreciated by those skilled in the art that disclosure of such drawings includes disclosure of electrical components or circuitry commonly used to implement such components.

[0021] FIG. 1 illustrates an exemplary block diagram representation of 5th generation core (5GC) network architecture.

[0022] FIG. 2 illustrates an exemplary block diagram of a computing device upon which the features of the present disclosure may be implemented in accordance with exemplary implementation of the present disclosure.

[0023] FIG. 3 illustrates an exemplary block diagram of a system for automatically determining a location of a user equipment (UE), in accordance with exemplary implementations of the present disclosure.

[0024] FIG. 4 illustrates an exemplary method flow diagram for automatically determining a location of a user equipment (UE) in accordance with exemplary implementations of the present disclosure.

[0025] FIG. 5 illustrates an exemplary scenario method flow diagram, for automatically determining location determination of a UE, in accordance with an embodiment of the present disclosure.

[0026] The foregoing shall be more apparent from the following more detailed description of the disclosure.

DETAILED DESCRIPTION

[0027] In the following description, for the purposes of explanation, various specific details are set forth in order to provide a thorough understanding of embodiments of the present disclosure. It will be apparent, however, that embodiments of the present disclosure may be practiced without these specific details. Several features described hereafter may each be used independently of one another or with any combination of other features. An individual feature may not address any of the problems discussed above or might address only some of the problems discussed above.

[0028] The ensuing description provides exemplary embodiments only, and is not intended to limit the scope, applicability, or configuration of the disclosure. Rather, the ensuing description of the exemplary embodiments will provide those skilled in the art with an enabling description for implementing an exemplary embodiment. It should be understood that various changes may be made in the function and arrangement of elements without departing from the spirit and scope of the disclosure as set forth.

[0029] Specific details are given in the following description to provide a thorough understanding of the embodiments. However, it will be understood by one of ordinary skill in the art that the embodiments may be practiced without these specific details. For example, circuits, systems, processes, and other components may be shown as components in block diagram form in order not to obscure the embodiments in unnecessary detail.

[0030] Also, it is noted that individual embodiments may be described as a process which is depicted as a flowchart, a flow diagram, a data flow diagram, a structure diagram, or a block diagram. Although a flowchart may describe the operations as a sequential process, many of the operations may be performed in parallel or concurrently. In addition, the order of the operations may be re-arranged. A process is terminated when its operations are completed but could have additional steps not included in a figure.

[0031] The word "exemplary" and/or "demonstrative" is used herein to mean serving as an example, instance, or illustration. For the avoidance of doubt, the subject matter disclosed herein is not limited by such examples. In addition, any aspect or design described herein as "exemplary" and/or "demonstrative" is not necessarily to be construed as preferred or advantageous over other aspects or designs, nor is it meant to preclude equivalent exemplary structures and techniques known to those of ordinary skill in the art. Furthermore, to the extent that the terms "includes," "has," "contains," and other similar words are used in either the detailed description or the claims, such terms are intended to be inclusive—in a manner similar to the term "comprising" as an open transition word—without precluding any additional or other elements.

[0032] As used herein, a "processing unit" or "processor" or "operating processor" includes one or more processors, wherein processor refers to any logic circuitry for processing instructions. A processor may be a general-purpose processor, a special purpose processor, a conventional processor, a digital signal processor, a plurality of microprocessors, one or more microprocessors in association with a Digital Signal Processing (DSP) core, a controller, a microcontroller,

Application Specific Integrated Circuits, Field Programmable Gate Array circuits, any other type of integrated circuits, etc. The processor may perform signal coding data processing, input/output processing, and/or any other functionality that enables the working of the system according to the present disclosure. More specifically, the processor or processing unit is a hardware processor.

[0033] As used herein, "a user equipment", "a user device", "a smart-user-device", "a smart-device", "an electronic device", "a mobile device", "a handheld device", "a wireless communication device", "a mobile communication device", "a communication device" may be any electrical, electronic and/or computing device or equipment, capable of implementing the features of the present disclosure. The user equipment/device may include, but is not limited to, a mobile phone, smart phone, laptop, a general-purpose computer, desktop, personal digital assistant, tablet computer, wearable device or any other computing device which is capable of implementing the features of the present disclosure. Also, the user device may contain at least one input means configured to receive an input from at least one of a transceiver unit, a processing unit, a storage unit, a detection unit and any other such unit(s) which are required to implement the features of the present disclosure.

[0034] As used herein, "storage unit" or "memory unit" refers to a machine or computer-readable medium including any mechanism for storing information in a form readable by a computer or similar machine. For example, a computer-readable medium includes read-only memory ("ROM"), random access memory ("RAM"), magnetic disk storage media, optical storage media, flash memory devices or other types of machine-accessible storage media. The storage unit stores at least the data that may be required by one or more units of the system to perform their respective functions.

[0035] As used herein "interface" or "user interface refers to a shared boundary across which two or more separate components of a system exchange information or data. The interface may also be referred to a set of rules or protocols that define communication or interaction of one or more modules or one or more units with each other, which also includes the methods, functions, or procedures that may be called.

[0036] All modules, units, components used herein, unless explicitly excluded herein, may be software modules or hardware processors, the processors being a general-purpose processor, a special purpose processor, a conventional processor, a digital signal processor (DSP), a plurality of microprocessors, one or more microprocessors in association with a DSP core, a controller, a

microcontroller, Application Specific Integrated Circuits (ASIC), Field Programmable Gate Array circuits (FPGA), any other type of integrated circuits, etc.

[0037] As used herein the transceiver unit include at least one receiver and at least one transmitter configured respectively for receiving and transmitting data, signals, information or a combination thereof between units/components within the system and/or connected with the system.

[0038] As used herein, absolute radio frequency channel number (ARFCN) refers to a unique number given to each radio channel in a cellular network that indicates the centre frequency of the channel and is used to identify specific frequencies for communication in both Time Division Duplex (TDD) and Frequency Division Duplex (FDD) systems.

[0039] As used herein, an NRPPa request refers to a type of message transmitted from the Location Management Function (LMF) to a target radio access network (RAN) vendor to obtain specific measurement parameters required for determining the precise location of a user equipment (UE) within the 5G New Radio (NR) network.

[0040] As used herein, an NRPPa response refers to a type of message received by the Location Management Function (LMF) from a target radio access network (RAN) vendor, containing specific measurement parameters necessary for accurately determining the location of a user equipment (UE) within the 5G New Radio (NR) network.

[0041] As discussed in the background section, existing solutions for determining a location of a user equipment (UE) lack a method to efficiently select an appropriate method based on the Location Services procedure supported at the Radio Access Network (RAN) end. The absence of a standardized approach often leads to a high failures and degradation in determining location accurately. However, recent advancements have attempted to address this issue by introducing an enhanced approach that allows for the calculation of location with the best possible attempt. This is achieved by leveraging the received measurement response from the RAN, enabling location calculation, but these approaches are also not able to determine the location of the user equipment (UE) reliably and appropriately. Further, over the period of time various solutions have been developed to improve the performance of communication devices and to optimise location determination of a UE. However, there are certain challenges with existing solutions. Firstly, it fails to incorporate a method for selecting a method for determination of a location of UE based on the Location Services procedure that is supported at the Radio Access Network (RAN) end.

This lack of method selection leads to inefficient and suboptimal performance, often resulting in higher probabilities of failures and degraded location accuracy. Additionally, the prior solution does not adequately address the potential for degradation in location accuracy, thereby diminishing the overall quality of location-based services.

[0042] To overcome these and other inherent problems in the art, the present disclosure proposes a solution of an advanced, automated system for determining the location of user equipment (UE) that dynamically selects the most appropriate technique based on specific capabilities supported by the Radio Access Network (RAN) vendor. The proposed solution significantly enhances the accuracy and reliability of location determination by leveraging real-time data and predefined configurations tailored to different RAN vendors. The Location Management Function (LMF) unit interfaces with the Access and Mobility Management Function (AMF) to receive location requests that include a New Radio Cell Global Identifier (NCGI). Based on the NCGI value, the LMF can identify the specific RAN vendor serving the UE, and further understand the particular location services procedures supported by that vendor. Upon determining the RAN vendor, the LMF sends a specialized NR Positioning Protocol A (NRPPa) request to the identified RAN. The response to this NRPPa request contains vital measurement parameters, such as Reference Signal Received Power (RSRP), Timing Advance, and Angle of Arrival, which vary depending on the vendor's technology and configuration. The difference in response allows the LMF to select an optimal location determination technique from a set of pre-configured techniques specifically tailored for each RAN vendor. The proposed solution is transformative because it not only customizes the location calculation based on vendor-specific data but also optimizes the process by reducing the time required to complete the location determination. Additionally, the system is designed to automatically recognize different types of cellular technology (e.g., TDD or FDD cells) by analysing the New Radio Absolute Radio Frequency Channel Number (NRAFCN) value received in the response, further refining the location accuracy based on cell-specific characteristics.

[0043] It would be appreciated by the person skilled in the art that by addressing the limitations of prior art solutions that lacked a method to select an appropriate location determination method based on RAN vendor capabilities, the present disclosure improves overall system efficiency, enhances the quality of location-based services, and significantly reduces the likelihood of location determination errors.

[0044] FIG. 1 illustrates an exemplary block diagram representation of 5th generation core (5GC) network architecture, in accordance with exemplary implementation of the present

disclosure. As shown in FIG. 1, the 5GC network architecture [100] includes a user equipment (UE) [102], a radio access network (RAN) [104], an Access and Mobility Management Function (AMF) [106], a Session Management Function (SMF) [108], a Service Communication Proxy (SCP) [110], an Authentication Server Function (AUSF) [112], a Network Slice Specific Authentication and Authorization Function (NSSAAF) [114], a Network Slice Selection Function (NSSF) [116], a Network Exposure Function (NEF) [118], a Network Repository Function (NRF) [120], a Policy Control Function (PCF) [122], a Unified Data Management (UDM) [124], an application function (AF) [126], a User Plane Function (UPF) [128], a data network (DN) [130], wherein all the components are assumed to be connected to each other in a manner as obvious to the person skilled in the art for implementing features of the present disclosure.

[0045] Radio Access Network (RAN) [104] is the part of a mobile telecommunications system that connects user equipment (UE) [102] to the core network (CN) and provides access to different types of networks (e.g., 5G network). It consists of radio base stations and the radio access technologies that enable wireless communication.

[0046] Access and Mobility Management Function (AMF) [106] is a 5G core network function responsible for managing access and mobility aspects, such as UE registration, connection, and reachability. It also handles mobility management procedures like handovers and paging.

[0047] Session Management Function (SMF) [108] is a 5G core network function responsible for managing session-related aspects, such as establishing, modifying, and releasing sessions. It coordinates with the User Plane Function (UPF) for data forwarding and handles IP address allocation and QoS enforcement.

[0048] Service Communication Proxy (SCP) [110] is a network function in the 5G core network that facilitates communication between other network functions by providing a secure and efficient messaging service. It acts as a mediator for service-based interfaces.

[0049] Authentication Server Function (AUSF) [112] is a network function in the 5G core responsible for authenticating UEs during registration and providing security services. It generates and verifies authentication vectors and tokens.

[0050] Network Slice Specific Authentication and Authorization Function (NSSAAF) [114] is a network function that provides authentication and authorization services specific to network slices. It ensures that UEs can access only the slices for which they are authorized.

[0051] Network Slice Selection Function (NSSF) [116] is a network function responsible for selecting the appropriate network slice for a UE based on factors such as subscription, requested services, and network policies.

[0052] Network Exposure Function (NEF) [118] is a network function that exposes capabilities and services of the 5G network to external applications, enabling integration with third-party services and applications.

[0053] Network Repository Function (NRF) [120] is a network function that acts as a central repository for information about available network functions and services. It facilitates the discovery and dynamic registration of network functions.

[0054] Policy Control Function (PCF) [122] is a network function responsible for policy control decisions, such as QoS, charging, and access control, based on subscriber information and network policies.

[0055] Unified Data Management (UDM) [124] is a network function that centralizes the management of subscriber data, including authentication, authorization, and subscription information.

[0056] Application Function (AF) [126] is a network function that represents external applications interfacing with the 5G core network to access network capabilities and services.

[0057] User Plane Function (UPF) [128] is a network function responsible for handling user data traffic, including packet routing, forwarding, and QoS enforcement.

[0058] Data Network (DN) [130] refers to a network that provides data services to user equipment (UE) in a telecommunications system. The data services may include but are not limited to Internet services, private data network related services.

[0059] FIG. 2 illustrates an exemplary block diagram of a computer system [1000] (also referred to herein as a computing device) upon which the features of the present disclosure may be implemented in accordance with exemplary implementation of the present disclosure. In an implementation, the computer system [1000] may also implement a method for automatically determining a location of a user equipment (UE) utilising the system. In another implementation, the computer system [1000] itself implements the method for automatically determining a location of a user equipment (UE) using one or more units configured within the computer system [1000], wherein said one or more units are capable of implementing the features as disclosed in the present disclosure.

[0060] The computer system [1000] may include a bus [1002] or other communication mechanism for communicating information, and a processor [1004] coupled with bus [1002] for processing information. The processor [1004] may be, for example, a general-purpose microprocessor. The computer system [1000] may also include a main memory [1006], such as a random-access memory (RAM), or other dynamic storage device, coupled to the bus [1002] for storing information and instructions to be executed by the processor [1004]. The main memory [1006] also may be used for storing temporary variables or other intermediate information during execution of the instructions to be executed by the processor [1004]. Such instructions, when stored in non-transitory storage media accessible to the processor [1004], render the computer system [1000] into a special-purpose machine that is customized to perform the operations specified in the instructions. The computer system [1000] further includes a read only memory (ROM) [1008] or other static storage device coupled to the bus [1002] for storing static information and instructions for the processor [1004].

[0061] A storage device [1010], such as a magnetic disk, optical disk, or solid-state drive is provided and coupled to the bus [1002] for storing information and instructions. The computer system [1000] may be coupled via the bus [1002] to a display [1012], such as a cathode ray tube (CRT), Liquid crystal Display (LCD), Light Emitting Diode (LED) display, Organic LED (OLED) display, etc. for displaying information to a computer user. An input device [1014], including alphanumeric and other keys, touch screen input means, etc. may be coupled to the bus [1002] for communicating information and command selections to the processor [1004]. Another type of user input device may be a cursor controller [1016], such as a mouse, a trackball, or cursor direction keys, for communicating direction information and command selections to the processor [1004], and for controlling cursor movement on the display [1012]. This input device typically has two

degrees of freedom in two axes, a first axis (e.g., x) and a second axis (e.g., y), that allow the device to specify positions in a plane.

[0062] The computer system [1000] may implement the techniques described herein using customized hard-wired logic, one or more ASICs or FPGAs, firmware and/or program logic which in combination with the computer system [1000] causes or programs the computer system [1000] to be a special-purpose machine. According to one implementation, the techniques herein are performed by the computer system [1000] in response to the processor [1004] executing one or more sequences of one or more instructions contained in the main memory [1006]. Such instructions may be read into the main memory [1006] from another storage medium, such as the storage device [1010]. Execution of the sequences of instructions contained in the main memory [1006] causes the processor [1004] to perform the process steps described herein. In alternative implementations of the present disclosure, hard-wired circuitry may be used in place of or in combination with software instructions.

[0063] The computer system [1000] also may include a communication interface [1018] coupled to the bus [1002]. The communication interface [1018] provides a two-way data communication coupling to a network link [1020] that is connected to a local network [1022]. For example, the communication interface [1018] may be an integrated services digital network (ISDN) card, cable modem, satellite modem, or a modem to provide a data communication connection to a corresponding type of telephone line. As another example, the communication interface [1018] may be a local area network (LAN) card to provide a data communication connection to a compatible LAN. Wireless links may also be implemented. In any such implementation, the communication interface [1018] sends and receives electrical, electromagnetic or optical signals that carry digital data streams representing various types of information.

[0064] The computer system [1000] can send messages and receive data, including program code, through the network(s), the network link [1020] and the communication interface [1018]. In the Internet example, a server [1030] might transmit a requested code for an application program through the Internet [1028], the ISP [1026], the Host [1024], the local network [1022] and the communication interface [1018]. The received code may be executed by the processor [1004] as it is received, and/or stored in the storage device [1010], or other non-volatile storage for later execution.

[0065] The computer system [1000] encompasses a wide range of electronic devices capable of processing data and performing computations. Examples of computer system [1000] include, but are not limited only to, personal computers, laptops, tablets, smartphones, servers, and embedded systems. The devices may operate independently or as part of a network and can perform a variety of tasks such as data storage, retrieval, and analysis. Additionally, computer system [1000] may include peripheral devices, such as monitors, keyboards, and printers, as well as integrated components within larger electronic systems, showcasing their versatility in various technological applications.

[0066] Referring to FIG. 3, an exemplary block diagram [300] of a system [300A] for automatically determining a location of a user equipment (UE) [102], is shown, in accordance with the exemplary implementations of the present disclosure. The system [300A] comprises at least one location management function (LMF) unit [302] connected to an Access and Mobility Management Function (AMF) unit [106]. The location management unit (LMF) unit [302] comprises at least one transceiver unit [304], and at least one processing unit [306]. Also, all of the components/ units of the system [300A] are assumed to be connected to each other unless otherwise indicated below. As shown in the figures all units shown within the system [300A] should also be assumed to be connected to each other. Also, in FIG. 3 only a few units are shown, however, the system [300A] may comprise multiple such units or the system [300A] may comprise any such numbers of said units, as required to implement the features of the present disclosure. Further, in an implementation, the system [300A] may be present in a user device or the user equipment [102] to implement the features of the present disclosure. The system [300A] may be a part of the user device / or may be independent of but in communication with the user equipment [102] (may also referred herein as a UE). In another implementation, the system [300A] may reside in a server or a network entity. In yet another implementation, the system [300A] may reside partly in the server/ network entity and partly in the user equipment [102].

[0067] The system [300A] is configured for automatically determining a location of a user equipment (UE) [102], with the help of the interconnection between the components/units of the system [300A]. The location may be the geo-location or the geographic position or area where the user equipment [102] is located.

[0068] The transceiver unit [304] of is configured to receive at the LMF unit [302] from the Access and Mobility Management Function (AMF) unit [106], a location request of the user equipment (UE) [102], wherein the location request at least comprises a New Radio Cell Global

Identifier (NCGI) value associated with a cell in the radio access network (RAN) [104] serving the user equipment (UE) [102]. The transceiver unit [304] receives the location request from an entity such as government entity or a network provider, a network administrator, a service provider etc. The LMF unit [302] is a network element that is responsible for collection and processing location-related information of the UE [102]. The location request may be a request seeking the location of the UE [102]. The NCGI value corresponds to an identifier (such as 36-bit identifier) that is made up of the gNodeB (gNB) Identity (ID) and the Cell Identity (CI). The NCGI is a value of the identifier which is assigned to each cell within the telecommunications network. The cell refers to the geographical region or area which is covered by a single base station in a cellular network.

[0069] The transceiver unit [304] communicatively coupled to the processing unit [306]. The processing unit [306] is configured to determine, at the LMF unit [302], a target RAN vendor from a set of pre-stored RAN vendor based on the NCGI value. The target RAN vendor may be a vendor selected from the set of pre-stored RAN vendor, the target RAN vendor is associated with the cell having the NCGI value. The set of pre-stored RAN vendors may correspond to a list or a database containing information related to the RAN vendors. The RAN vendors may correspond to a company or an organisation that provides equipment, technology, and solutions for deployment, operation, and maintenance of RANs in telecommunications infrastructure.

[0070] The transceiver unit [304] is further configured to transmit from the LMF unit [302] to the target RAN vendor, a first request. The first request may be a NR Positioning Protocol A (NRPPa) request. The New Radio Positioning Protocol A (NRPPa) carries positioning information between the Next Generation - Radio Access Network (NG-RAN) and the LMF unit [302] over the next generation control plane. The NRPPa allows the NG-RAN node to exchange location information such as Enhanced Cell Identifier (E-CID), exchange information such as observed time difference of arrival (OTDOA) for the purposes of E-CID and OTDOA positioning. The NRPPa request may be a request seeking one or more measurement parameters from the target RAN.

[0071] The transceiver unit [304] is further configured to receive at the LMF unit [302] from the target RAN vendor, a first response based on the first request, wherein the first response at least comprises one or more measurement parameters associated with the target RAN vendor. The first response a NR Positioning Protocol A (NRPPa) response. The NRPPa response is a response from the target RAN to the NRPPa request. The NRPPa response includes the one or more measurement

parameters. The one or more measurement parameters associated with the target RAN vendor received in the first response is at least one of a Reference Signal Received Power (RSRP) parameter, a timing advance parameter, and an angle of arrival parameter. The RSRP parameter may be a parameter for measuring the strength of the signal received by the UE [102] from the base station. The timing advance parameter may be an element for synchronising data transmission and compensating for the propagation of delay between the UE and the base station. The angle of arrival parameter may be a parameter that refers to the direction information indicating the path a signal has travelled for reaching to the antenna or in other words, the angle from which the signal arrives.

[0072] The processing unit [306] is further configured to identify at the LMF unit [302] at least a target pre-configured technique from a set of pre-configured techniques associated with the target RAN vendor based on the one or more measurement parameters. The target pre-configured technique may refer to a technique selected from the set of pre-configured techniques. The set of pre-configured techniques may refer to a list or database of pre-configured techniques for determining the location of the UE. The set of preconfigured techniques may include, but not limited only to any or a combination of RSRP-Based Location Estimation, Timing Advance Based Calculation, Angle of Arrival (AoA) Techniques, Hybrid Techniques, Cell ID-Based Location, Propagation Delay Techniques and the like For determining cell location.

[0073] The processing unit [306] is further configured to automatically determine the location of the user equipment [102] associated with the location request based on at least the target pre-configured technique and the one or more measurement parameters. The processing unit [306] automatically selects the most suitable pre-configured technique based on the one or more .measurement parameters received. For example, if the data includes both RSRP and Timing Advance, the processing unit [306] may choose a technique that integrates these parameters to compute the location more precisely than using a single parameter method. After determining the location, this information is processed to be delivered to other network functions or systems that require this data, either for further processing or to provide location-based services directly to the user.

[0074] The present disclosure further discloses that the processing unit [306] is configured to determine at least a cell type associated with the target RAN vendor based on at least a New Radio Absolute Radio Frequency Channel Number (ARFCN) value received in the first response. The cell type may refer to the type of cell having different characteristics and functionalities. There

may be various types of cells based on factors such as size, range and capacity. The ARFCN value may refer to a value of an identifier used to identify a specific carrier or service providers within the NR air interface. The ARFCN value may use to identify each frequency at a particular location. The ARFCN is a code that specifies a pair of reference frequencies used for the transmission and reception in a radio system. One of them may be for the uplink signal and one of them may be for the downlink signal.

[0075] The present disclosure further discloses that the target pre-configured technique is further identified based on at least one parameter value associated with one of the one or more measurement parameters. The at least one parameter value may be the value associated with any of the RSRP parameters, the timing advance parameters or the angle of arrival parameters.

[0076] For example, the processing unit at the Location Management Function (LMF) receives the following measurement values from the RAN:

NR-TADV	AngleOfArrival	SERVING-RSRP
208	"zenithAoA":1025, "azimuthAoA":1297	92

[0077] As illustrated, the NR-TADV value of 208 represents the timing advance, which helps determine the distance between the UE and the serving cell. The Angle of Arrival (AoA) values, with zenithAoA at 1025 and azimuthAoA at 1297, provide directional information about the signal's arrival at the base station. The SERVING-RSRP value of 92 indicates the power level of the signal received by the UE, useful for assessing signal strength and quality.

[0078] Further, in accordance with the present disclosure, it is to be acknowledged that the functionality described for the various the components/units can be implemented interchangeably. While specific embodiments may disclose a particular functionality of these units for clarity, it is recognized that various configurations and combinations thereof are within the scope of the disclosure. The functionality of specific units as disclosed in the disclosure should not be construed as limiting the scope of the present disclosure. Consequently, alternative arrangements and substitutions of units, provided they achieve the intended functionality described herein, are considered to be encompassed within the scope of the present disclosure.

[0079] Referring to FIG. 4, an exemplary method flow diagram [400] for automatically determining a location of a user equipment (UE), in accordance with exemplary implementations of the present disclosure is shown. In an implementation the method [400] is performed by the system [300A]. Further, in an implementation, the system [300A] may be present in a server device to implement the features of the present disclosure. Also, as shown in Figure 4, the method [400] starts at step [402].

[0080] At step [404], the method [400] comprises receiving, by a transceiver unit [304] at a Location Management Function (LMF) unit [302] from an Access and Mobility Management Function (AMF) unit [106], a location request of the user equipment [102], wherein the location request at least comprises a New Radio Cell Global Identifier (NCGI) value associated with a cell in a radio access network (RAN) [104] serving the user equipment (UE) [102]. The transceiver unit [304] receives the location request from an entity such as government entity or a network provider, a network administrator, a service provider etc. The LMF unit [302] is a network element that is responsible for collection and processing location-related information of the UE [102]. The location request may be a request seeking the location of the UE [102]. The NCGI value corresponds to an identifier (such as 36-bit identifier) that is made up of the gNodeB (gNB) Identity (ID) and the Cell Identity (CI). The NCGI is a value of the identifier which is assigned to each cell within the telecommunications network. The cell refers to the geographical region or area which is covered by a single base station in a cellular network.

[0081] At step [406], the method [400] comprises determining, by a processing unit [306] at the LMF unit [302], a target RAN vendor from a set of pre-stored RAN vendor based on the NCGI value. The target RAN vendor may be a vendor selected from the set of pre-stored RAN vendor, the target RAN vendor is associated with the cell having the NCGI value. The set of pre-stored RAN vendors may correspond to a list or a database containing information related to the RAN vendors. The RAN vendors may correspond to a company or an organisation that provides equipment, technology, and solutions for deployment, operation, and maintenance of RANs in telecommunications infrastructure.

[0082] At step [408], the method [400] comprises transmitting, by the transceiver unit [304] from the LMF unit [302] to the target RAN vendor, a first request. The first request may be a NR Positioning Protocol A (NRPPa) request. The New Radio Positioning Protocol A (NRPPa) carries positioning information between the Next Generation - Radio Access Network (NG-RAN) and the LMF unit [302] over the next generation control plane. The NRPPa allows the NG-RAN node to

exchange location information such as Enhanced Cell Identifier (E-CID), exchange information such as observed time difference of arrival (OTDOA) for the purposes of E-CID and OTDOA positioning. The NRPPa request may be a request seeking one or more measurement parameters from the target RAN.

[0083] At step [410], the method [400] comprises receiving, by the transceiver unit [304] at the LMF unit [302] from the target RAN vendor, a first response based on the first request, wherein the first response comprises one or more measurement parameters associated with the target RAN vendor. The first response a NR Positioning Protocol A (NRPPa) response. The NRPPa response is a response to the NRPPa request which responds with the one or more measurement parameters. The one or more measurement parameters associated with the target RAN vendor received in the first response is at least one of a Reference Signal Received Power (RSRP) parameter, a timing advance parameter, and an angle of arrival parameter. The RSRP parameter may be a parameter for measuring the strength of the signal received by the UE [102] from the base station. The timing advance parameter may be an element for synchronising data transmission and compensating for the propagation of delay between the UE and the base station. The angle of arrival parameter may be a parameter that refers to the direction information indicating the path a signal has travelled for reaching to the antenna or in other words, the angle from which the signal arrives.

[0084] Then, at step [412], the method [400] comprises identifying, by the processing unit [306] at the LMF unit [302], at least a target pre-configured technique from a set of pre-configured techniques associated with the target RAN vendor based on the one or more measurement parameters. The target pre-configured technique may refer to a technique selected from the set of pre-configured techniques. The set of pre-configured techniques may refer to a list or database of pre-configured techniques for determining the location of the UE. The set of preconfigured techniques may include, but not limited only to one or a combination of RSRP-Based Location Estimation, Timing Advance Based Calculation, Angle of Arrival (AoA) Techniques, Hybrid Techniques, Cell ID-Based Location, Propagation Delay Techniques and the like.

[0085] Thereafter, at step [414], the method [400] comprises automatically determining, by the processing unit [306], the location of the user equipment (UE) [102] associated with the location request based on at least the target pre-configured technique and the one or more measurement parameters. The processing unit [306] automatically selects the most suitable pre-configured technique based on the one or more measurement parameters received. For example, if the data includes both RSRP and Timing Advance, the processing unit [306] may choose a technique that

integrates these parameters to compute the location more precisely than using a single parameter method. After determining the location, this information is processed to be delivered to other network functions or systems that require this data, either for further processing or to provide location-based services directly to the user.

[0086] The present disclosure further discloses that in the method [400] the automatically determining the location of the user equipment (UE) [102] further comprises determining, by the processing unit [306] at least a cell type associated with the target RAN vendor based on at least a New Radio Absolute Radio Frequency Channel Number (NRAFCN) value received in the first response. The cell type may refer to the type of cell having different characteristics and functionalities. There may be various types of cells based on factors such as size, range and capacity. The ARFCN value may refer to a value of an identifier used to identify a specific carrier or service providers within the NR air interface.

[0087] The present disclosure further discloses that in the method [400], identifying the target pre-configured technique is further based on at least one parameter value associated with one of the one or more measurement parameters. The at least one parameter value may be the value associated with any of the RSRP parameters, the timing advance parameters or the angle of arrival parameters.

[0088] Thereafter, at step [416], the method [400] is terminated.

[0089] Referring to FIG. 5, illustrates an exemplary scenario method flow diagram, for automatically determining location determination of a UE, in accordance with an embodiment of the present disclosure.

[0090] The method begins when the AMF unit [106] sends a location determination request to the LMF unit [302]. This request is made to acquire the precise location information for the UE [102].

[0091] Upon receiving the location request, the LMF unit [302] processes the New Radio Cell Global Identifier (NCGI) value included in the request. The NCGI is a unique identifier that helps the LMF to verify the RAN vendor that serves the UE [102].

[0092] After determining the RAN vendor based on the NCGI, the LMF unit [302] sends an NRPPa (New Radio Positioning Protocol A) request to the identified RAN vendor, referred to as RAN 1 [502] in the context.

[0093] RAN 1 [502] responds to the NRPPa request by sending back a set of measurement parameters such as Reference Signal Received Power (RSRP) and Timing Advance (TA). The RSRP is a measure of the received power level in a radio network. The average power is a measure of the power received from a single reference signal. The RSSP may use for assessing the quality of connections in the radio network. The RSRP may represent the strength of the received signal from the serving cell's base station in the radio network. The timing advance (TA) value may corresponds to the length of time a signal takes to reach the base station or RAN from a user equipment. TA may be used for establishing synchronisation between the UE and RAN.

[0094] The LMF unit [302], equipped with the measurement information from RAN 1, [502] selects the appropriate pre-configured techniques or methods for calculating the UE's [102] location. The selection is based on the RAN vendor's characteristics and the types of measurement parameters received.

[0095] Finally, the LMF unit [302] calculates the UE's [102] location using the selected techniques and the provided measurement parameters. Once the location is determined, the LMF unit [302] communicates this information back to the AMF unit [106].

[0096] The present disclosure further discloses a non-transitory computer readable storage medium storing instructions for automatically determining a location of a user equipment (UE) [102], the instructions include executable code which, when executed by one or more units of a system [300A], causes: a transceiver unit [304] of the system [300A] to receive at the LMF unit [302] from an Access and Mobility Management Function (AMF) unit [106], a location request of the user equipment (UE) [102], wherein the location request at least comprises a New Radio Cell Global Identifier (NCGI) value associated with a cell in a radio access network (RAN) serving the user equipment (UE) [102]; a processing unit [306] of the system [300A], to determine at the LMF unit [302] a target RAN vendor from a set of pre-stored RAN vendor based on the NCGI value; the transceiver unit [304] to transmit from the LMF unit [302] to the target RAN vendor, a first request; the transceiver unit [304] of the system [300A] to receive at the LMF unit [302] from the target RAN vendor, a first response based on the first request, wherein the first response at least comprises one or more measurement parameters associated with the target RAN vendor; the

processing unit [306] of the system [300A] to identify, at the LMF unit [302], at least a target pre-configured technique from a set of pre-configured techniques associated with the target RAN vendor based on the one or more measurement parameters; the processing unit [306] to automatically determine the location of the user equipment [102] associated with the location request based on at least the target pre-configured technique and the one or more measurement parameters.

[0097] The present disclosure relates to a network equipment for automatically determining a location of a user equipment (UE) [102]. the a network equipment comprising: a transceiver unit [304], wherein the transceiver unit [304] is configured to receive, at a Location management function (LMF) unit [302] from an Access and Mobility Management Function (AMF) unit [106], a location request of the user equipment (UE) [102], wherein the location request at least comprises a New Radio Cell Global Identifier (NCGI) value associated with a cell in a radio access network (RAN) [104] serving the user equipment (UE) [102]; a processing unit [306] connected at least to the transceiver unit [304], wherein the processing unit [306] is configured to determine, at the LMF unit [302], a target RAN vendor from a set of pre-stored RAN vendor based on the NCGI value; the transceiver unit [304] is further configured to: transmit, from the LMF unit [302] to the target RAN vendor, a first request; receive, at the LMF unit [302] from the target RAN vendor, a first response based on the first request, wherein the first response at least comprises one or more measurement parameters associated with the target RAN vendor; the processing unit [306] is further configured to: identify, at the LMF unit [302], at least a target pre-configured technique from a set of pre-configured techniques associated with the target RAN vendor based on the one or more measurement parameters; and automatically determine the location of the user equipment [102] associated with the location request based on at least the target pre-configured technique and the one or more measurement parameters.

[0098] As is evident from the above, the present disclosure provides a technically advanced solution for automatically determining a location of a user equipment (UE). The proposed solution for provides several technical advantages. Firstly, the Location Management Function (LMF) unit is capable of selecting method-based pre-configured techniques that are supported by the specific RAN vendor's end. The flexibility enables for the utilization of vendor-specific pre-configured techniques, optimizing the accuracy and efficiency of the user location calculation process. By selecting the most suitable pre-configured technique based on the RAN vendor's capabilities, the overall time taken for the completion of the procedure is significantly reduced enabling faster and more accurate user location calculations. Moreover, the ability of LMF to adapt to different

measurement combinations of RSRP, RSRQ, and Timing Advance received in NRPPa responses contributes to the robustness and accuracy of the location calculation. The system can leverage the most appropriate combination of measurements based on the vendor's support, resulting in more precise user location estimation.

[0099] While considerable emphasis has been placed herein on the disclosed implementations, it will be appreciated that many implementations can be made and that many changes can be made to the implementations without departing from the principles of the present disclosure. These and other changes in the implementations of the present disclosure will be apparent to those skilled in the art, whereby it is to be understood that the foregoing descriptive matter to be implemented is illustrative and non-limiting.

We Claim:

1. A method for automatically determining a location of a user equipment (UE) [102], the method comprising:
   - receiving, by a transceiver unit [304] at a Location Management Function (LMF) unit [302] from an Access and Mobility Management Function (AMF) unit [106], a location request of the user equipment [102], wherein the location request at least comprises a New Radio Cell Global Identifier (NCGI) value associated with a cell in a radio access network (RAN) [104] serving the user equipment (UE) [102];
   - determining, by a processing unit [306] at the LMF unit [302], a target RAN vendor from a set of pre-stored RAN vendor based on the NCGI value;
   - transmitting, by the transceiver unit [304] from the LMF unit [302] to the target RAN vendor, a first request;
   - receiving, by the transceiver unit [304] at the LMF unit [302] from the target RAN vendor, a first response based on the first request, wherein the first response comprises one or more measurement parameters associated with the target RAN vendor;
   - identifying, by the processing unit [306] at the LMF unit [302], at least a target pre-configured technique from a set of pre-configured techniques associated with the target RAN vendor based on the one or more measurement parameters; and
   - automatically determining, by the processing unit [306], the location of the user equipment (UE) [102] associated with the location request based on at least the target pre-configured technique and the one or more measurement parameters.

2. The method as claimed in claim 1 wherein the first request is a NR Positioning Protocol A (NRPPa) request and the first response is a NR Positioning Protocol A (NRPPa) response.

3. The method as claimed in claim 1, wherein the automatically determining the location of the user equipment (UE) [102] further comprises determining, by the processing unit [306] at least a cell type associated with the target RAN vendor based on at least a New Radio Absolute Radio Frequency Channel Number (ARFCN) value received in the first response.

4. The method as claimed in claim 1, wherein the one or more measurement parameters associated with the target RAN vendor received in the first response is at least one of a Reference Signal Received Power (RSRP) parameter, a timing advance parameter, and an angle of arrival parameter.

5. The method as claimed in claim 1, wherein identifying the target pre-configured technique is further based on at least one parameter value associated with one of the one or more measurement parameters.

6. A system [300A] for automatically determining a location of a user equipment (UE) [102], the system [300A] comprising:
   - a transceiver unit [304], wherein the transceiver unit [304] is configured to receive, at a Location management function (LMF) unit [302] from an Access and Mobility Management Function (AMF) unit [106], a location request of the user equipment (UE) [102], wherein the location request at least comprises a New Radio Cell Global Identifier (NCGI) value associated with a cell in a radio access network (RAN) [104] serving the user equipment (UE) [102];
   - a processing unit [306] connected at least to the transceiver unit [304], wherein the processing unit [306] is configured to determine, at the LMF unit [302], a target RAN vendor from a set of pre-stored RAN vendor based on the NCGI value;
   - the transceiver unit [304] is further configured to:
     - transmit, from the LMF unit [302] to the target RAN vendor, a first request;
     - receive, at the LMF unit [302] from the target RAN vendor, a first response based on the first request, wherein the first response at least comprises one or more measurement parameters associated with the target RAN vendor;
   - the processing unit [306] is further configured to:
     - identify, at the LMF unit [302], at least a target pre-configured technique from a set of pre-configured techniques associated with the target RAN vendor based on the one or more measurement parameters; and
     - automatically determine the location of the user equipment [102] associated with the location request based on at least the target pre-configured technique and the one or more measurement parameters.

7. The system [300A] as claimed in claim 6, wherein the first request is a NR Positioning Protocol A (NRPPa) request and the first response is a NR Positioning Protocol A (NRPPa) response.

8. The system [300A] as claimed in claim 6, wherein the processing unit [306] is configured to determine at least a cell type associated with the target RAN vendor based on at least a New

Radio Absolute Radio Frequency Channel Number (ARFCN) value received in the first response.

9. The system [300A] as claimed in claim 6, wherein the one or more measurement parameters associated with the target RAN vendor received in the first response is at least one of a Reference Signal Received Power (RSRP) parameter, a timing advance parameter, and an angle of arrival parameter.

10. The system [300A] as claimed in claim 6, wherein the target pre-configured technique is further identified based on at least one parameter value associated with one of the one or more measurement parameters.

11. A network equipment for automatically determining a location of a user equipment (UE) [102], the network equipment comprising:

- a transceiver unit [304], wherein the transceiver unit [304] is configured to receive, at a Location management function (LMF) unit [302] from an Access and Mobility Management Function (AMF) unit [106], a location request of the user equipment (UE) [102], wherein the location request at least comprises a New Radio Cell Global Identifier (NCGI) value associated with a cell in a radio access network (RAN) [104] serving the user equipment (UE) [102];
- a processing unit [306] connected at least to the transceiver unit [304], wherein the processing unit [306] is configured to determine, at the LMF unit [302], a target RAN vendor from a set of pre-stored RAN vendor based on the NCGI value;
- the transceiver unit [304] is further configured to:
  - transmit, from the LMF unit [302] to the target RAN vendor, a first request;
  - receive, at the LMF unit [302] from the target RAN vendor, a first response based on the first request, wherein the first response at least comprises one or more measurement parameters associated with the target RAN vendor;
- the processing unit [306] is further configured to:
  - identify, at the LMF unit [302], at least a target pre-configured technique from a set of pre-configured techniques associated with the target RAN vendor based on the one or more measurement parameters; and
  - automatically determine the location of the user equipment [102] associated with the location request based on at least the target pre-configured technique and the one or more measurement parameters.

12. A non-transitory computer-readable storage medium storing instruction for automatically determining a location of a user equipment (UE) [102], the storage medium comprising executable code which, when executed by one or more units of a system, causes:

- a transceiver unit [304] to receive, at a Location management function (LMF) unit [302] from an Access and Mobility Management Function (AMF) unit [106], a location request of the user equipment (UE) [102], wherein the location request at least comprises a New Radio Cell Global Identifier (NCGI) value associated with a cell in a radio access network (RAN) [104] serving the user equipment (UE) [102];
- a processing unit [306] to determine, at the LMF unit [302], a target RAN vendor from a set of pre-stored RAN vendor based on the NCGI value;
- the transceiver unit [304] further to transmit, from the LMF unit [302] to the target RAN vendor, a first request;
- the transceiver unit [304] further to receive, at the LMF unit [302] from the target RAN vendor, a first response based on the first request, wherein the first response at least comprises one or more measurement parameters associated with the target RAN vendor;
- the processing unit [306] further to identify, at the LMF unit [302], at least a target pre-configured technique from a set of pre-configured techniques associated with the target RAN vendor based on the one or more measurement parameters; and
- the processing unit [306] further to automatically determine the location of the user equipment [102] associated with the location request based on at least the target pre-configured technique and the one or more measurement parameters.

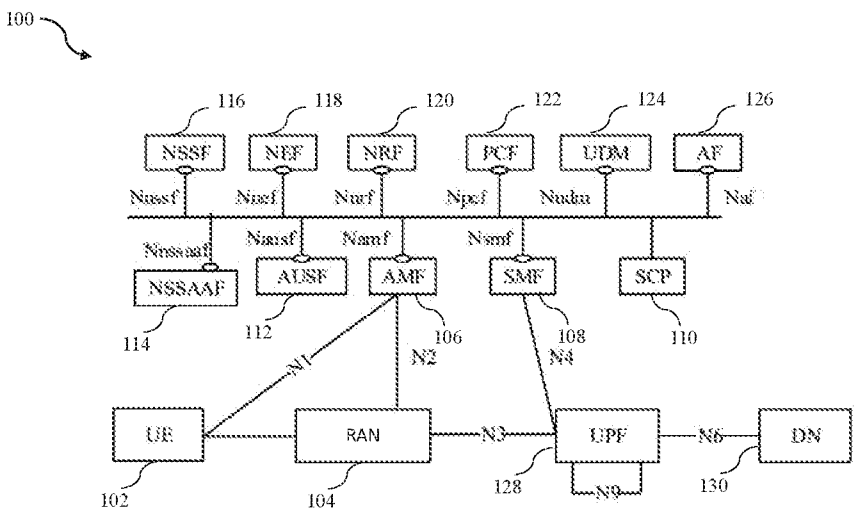
100
116
118
120
122
124
126
NSSF
NEF
NRF
PCF
UDM
AF
Nnssf
Nnef
Nnrf
Npcf
Nudm
Naf
Nnssaaf
Nausf
Namf
Nsmf
NSSAAF
AUSF
AMF
SMF
SCP
114
112
106
108
110
N1
N2
N4
UE
RAN
N3
UPF
N6
DN
102
104
128
N9
130

FIG. 1

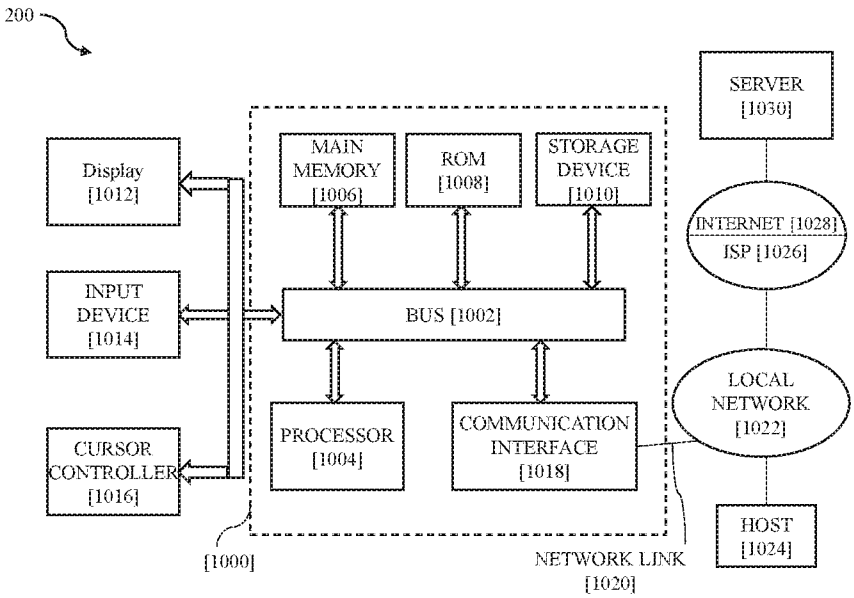
200
SERVER [1030]
Display [1012]
MAIN MEMORY [1006]
ROM [1008]
STORAGE DEVICE [1010]
INTERNET [1028]
ISP [1026]
INPUT DEVICE [1014]
BUS [1002]
LOCAL NETWORK [1022]
CURSOR CONTROLLER [1016]
PROCESSOR [1004]
COMMUNICATION INTERFACE [1018]
HOST [1024]
[1000]
NETWORK LINK [1020]

FIG. 2

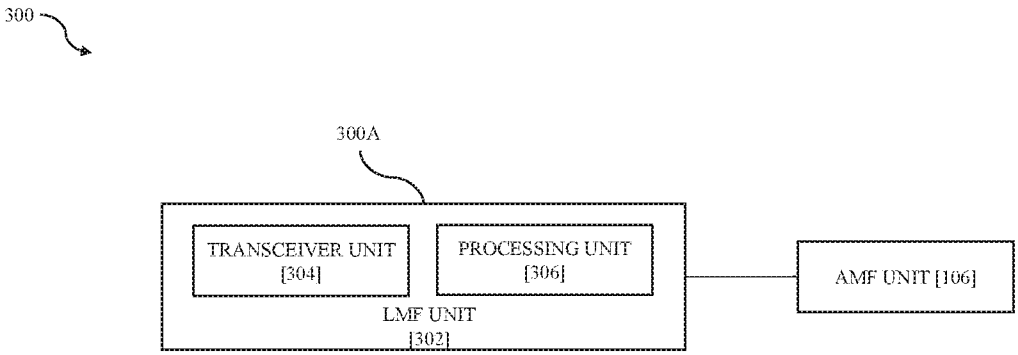
300
300A
TRANSCEIVER UNIT [304]
PROCESSING UNIT [306]
LMF UNIT [302]
AMF UNIT [106]

FIG. 3

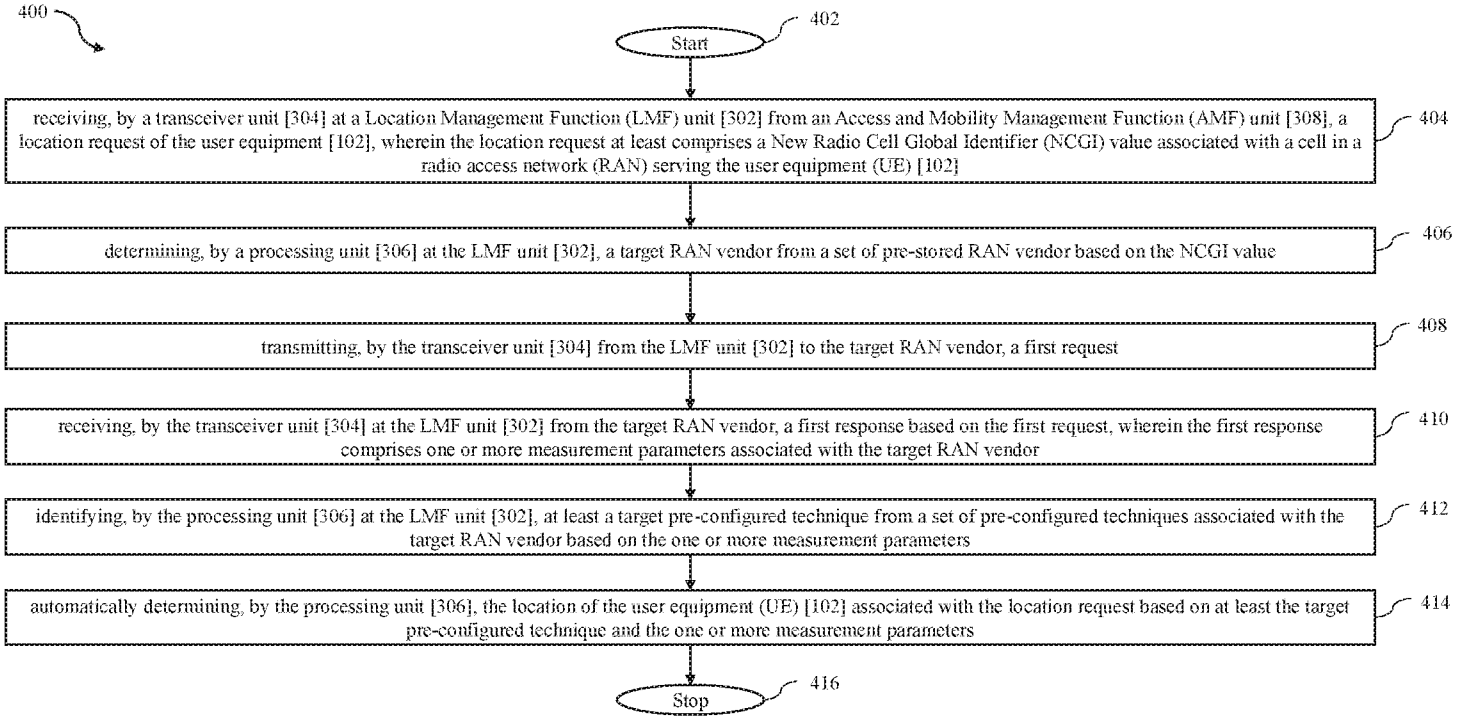
400
Start
402
receiving, by a transceiver unit [304] at a Location Management Function (LMF) unit [302] from an Access and Mobility Management Function (AMF) unit [308], a location request of the user equipment [102], wherein the location request at least comprises a New Radio Cell Global Identifier (NCGI) value associated with a cell in a radio access network (RAN) serving the user equipment (UE) [102]
404
determining, by a processing unit [306] at the LMF unit [302], a target RAN vendor from a set of pre-stored RAN vendor based on the NCGI value
406
transmitting, by the transceiver unit [304] from the LMF unit [302] to the target RAN vendor, a first request
408
receiving, by the transceiver unit [304] at the LMF unit [302] from the target RAN vendor, a first response based on the first request, wherein the first response comprises one or more measurement parameters associated with the target RAN vendor
410
identifying, by the processing unit [306] at the LMF unit [302], at least a target pre-configured technique from a set of pre-configured techniques associated with the target RAN vendor based on the one or more measurement parameters
412
automatically determining, by the processing unit [306], the location of the user equipment (UE) [102] associated with the location request based on at least the target pre-configured technique and the one or more measurement parameters
414
Stop
416

FIG. 4

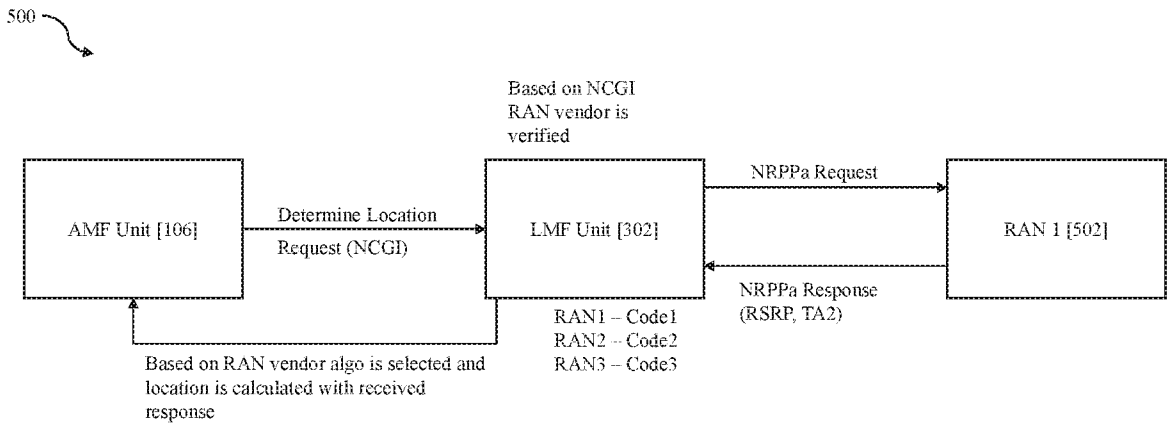
500
Based on NCGI
RAN vendor is
verified
AMF Unit [106]
Determine Location
Request (NCGI)
LMF Unit [302]
NRPPa Request
RAN 1 [502]
NRPPa Response
(RSRP, TA2)
RAN1 – Code1
RAN2 – Code2
RAN3 – Code3
Based on RAN vendor algo is selected and
location is calculated with received
response

FIG. 5

INTERNATIONAL SEARCH REPORT

International application No.
PCT/IN2024/050788

A. CLASSIFICATION OF SUBJECT MATTER
H04W64/00,H04W4/029,H04W24/10 Version=2024.01

According to International Patent Classification (IPC) or to both national classification and IPC

B. FIELDS SEARCHED

Minimum documentation searched (classification system followed by classification symbols)

H04W

Documentation searched other than minimum documentation to the extent that such documents are included in the fields searched

Electronic database consulted during the international search (name of database and, where practicable, search terms used)

PatSeer, IPO Internal Database

C. DOCUMENTS CONSIDERED TO BE RELEVANT

Category*	Citation of document, with indication, where appropriate, of the relevant passages	Relevant to claim No.
Y	US20200053638A1 (QUALCOMM INC) (13 February 2020) (2020-02-13) Abstract, Paragraph-[0042],[0047],[0056]; Figures: 1-17; Claims: 1-52.	1-12
Y	US20230022005A1 (OFINNO LLC) (26 January 2023) (2023-01-26) Abstract, Paragraph-[0213],[0218],[0276]; Figures: 1-30; Claims: 1-20.	1-12
A	US20220070753A1 (QUALCOMM INC) (03 March 2022) (2022-03-03) Abstract, Paragraph-[0080]; Figures: 1-25; Claims: 1-30.	1-12

☐ Further documents are listed in the continuation of Box C. ☒ See patent family annex.

* Special categories of cited documents:
"A" document defining the general state of the art which is not considered to be of particular relevance
"D" document cited by the applicant in the international application
"E" earlier application or patent but published on or after the international filing date
"L" document which may throw doubts on priority claim(s) or which is cited to establish the publication date of another citation or other special reason (as specified)
"O" document referring to an oral disclosure, use, exhibition or other means
"P" document published prior to the international filing date but later than the priority date claimed
"T" later document published after the international filing date or priority date and not in conflict with the application but cited to understand the principle or theory underlying the invention
"X" document of particular relevance; the claimed invention cannot be considered novel or cannot be considered to involve an inventive step when the document is taken alone
"Y" document of particular relevance; the claimed invention cannot be considered to involve an inventive step when the document is combined with one or more other such documents, such combination being obvious to a person skilled in the art
"&" document member of the same patent family

Date of the actual completion of the international search	Date of mailing of the international search report
03-10-2024	03-10-2024
Name and mailing address of the ISA/ Indian Patent Office Plot No.32, Sector 14,Dwarka,New Delhi-110075 Facsimile No.	Authorized officer Priy Ranjan Yadav Telephone No. +91-1125300200

INTERNATIONAL SEARCH REPORT
Information on patent family members

International application No.
PCT/IN2024/050788

Citation	Pub.Date	Family	Pub.Date
US 20200053638 A1	13-02-2020	KR 20210043577 A	21-04-2021
		EP 3837899 B1	24-01-2024
		TW 202023309 A	16-06-2020
		CN 112602357 B	26-04-2024
		WO 2020036848 A1	20-02-2020
		US 20220295388 A1	15-09-2022
US 20230022005 A1	26-01-2023	WO 2021195170 A1	30-09-2021
US 20220070753 A1	03-03-2022	US 11206595 B2	21-12-2021
		CN 114270882 A	01-04-2022
		WO 2021030715 A1	18-02-2021
		EP 4014612 A1	22-06-2022
		US 11683738 B2	20-06-2023