April 28, 1925. 1,535,686

O. C. ROESEN

FOLDING MECHANISM

Filed May 6, 1924

Fig. 1.

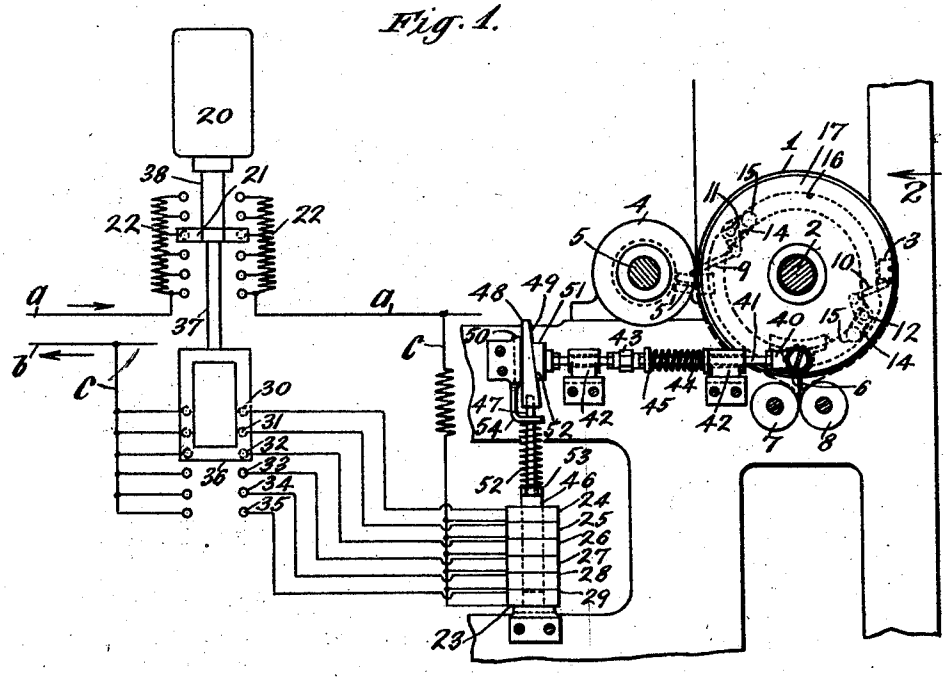

Fig. 3.

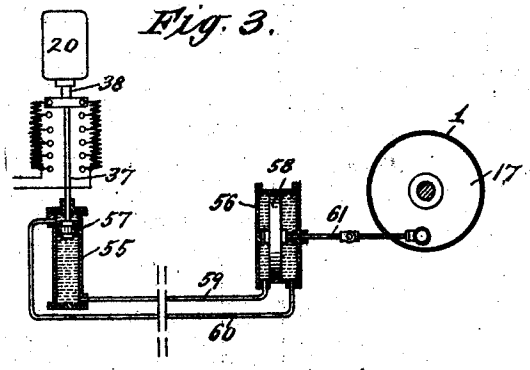

Fig. 2.

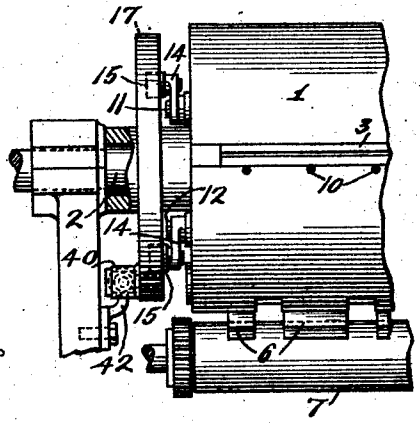

Fig. 4.

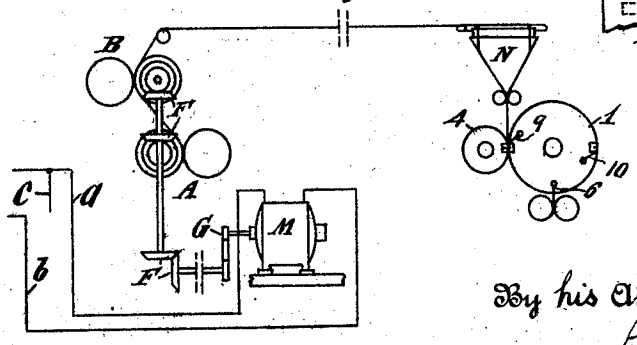

Inventor

Oscar C Roesen

By his Attorneys

Philip Sawyer Rice Kennedy

Patented Apr. 28, 1925. 1,535,686

UNITED STATES PATENT OFFICE.

OSCAR C. ROESEN, OF BROOKLYN, NEW YORK, ASSIGNOR TO R. HOE AND CO., OF NEW YORK, N. Y., A CORPORATION OF NEW YORK.

FOLDING MECHANISM.

Application filed May 6, 1924. Serial No. 711,343.

To all whom it may concern:

Be it known that I, OSCAR C. ROESEN, a citizen of the United States, residing at Brooklyn, county of Kings, and State of New York, have invented certain new and useful Improvements in Folding Mechanism, fully described and represented in the following specification and the accompanying drawings, forming a part of the same.

This invention relates to certain improvements in folding mechanisms.

In folding mechanisms, and particularly rotary folding mechanism, the product to be folded is forwarded to a rotary carrier, usually a cylinder which is provided with sheet taking devices, a sheet being advanced by the carrier for folding off into the bite of a pair of folding off rolls into which it is tucked by a folding blade. With this class of folders a variation in the speed of the carrier causes an irregularity in the fold line of successive sheets, as the sheet taking devices do not let go of the sheet at the same time so that it can be folded off into the folding rolls without damage to the sheet, this being particularly true where the sheet taking devices employed are pins.

It is a special object of the present invention to produce a folding mechanism in which the actuating means which operate the sheet taking devices are controlled from the driving mechanism of the machine so that as the speed of the machine is varied the actuating devices are operated to correspondingly vary the time at which the sheet is released thereby, so that an even folding of the sheet is obtained without injury to the sheet.

A further object of the invention is to provide a construction by which this may be electrically effected, the devices employed being controlled from the motor circuit by which the machine is driven.

With these and other objects not specifically referred to the invention consists of certain novel parts, arrangements, and combinations, which will be described in connection with the accompanying drawings and the novel features pointed out in the claims hereunto annexed.

Referring now to these drawings,—

Figure 1 is an end elevation, partly in section, of the folder end of a printing machine showing one form of the invention;

Figure 2 is a side view looking in the direction of the arrow 2 of Fig. 1;

Figure 3 is a sectional view similar to Fig. 1 showing one modification which may be employed, the circuits being in part omitted,

Figure 4 is a diagrammatic end elevation of the invention as embodied in a printing machine.

Referring now to these drawings, the invention has been illustrated as employed with a printing machine, the parts of which are diagrammatically shown. This machine includes a printing couple A and a perfecting couple B, these couples being driven by means of gearing F and G from a motor M. After printing, the web is directed from the usual former N to a rotary folding mechanism. This rotary folding mechanism, as shown, is capacitated to cut a sheet from a web or associated webs and fold off the cut sheets. The mechanism includes a cylinder 1 mounted on a shaft 2 and provided with the usual cutting woods 3. Co-operating with this cylinder is a cutting cylinder 4 carried on a shaft 5 and provided with cutting knife 5'.

The folding cylinder 1 is provided with a rotary folding blade 6, which tucks the sheet into the bite of a pair of folding rolls 7, 8. The folding cylinder is also provided with sheet taking devices which may be varied in character. In the preferred constructions, however, these sheet taking devices are pins, two sets of these pins 9, 10 being provided. These pins are carried on rock shafts 11, 12 mounted in the cylinder walls, and these rock shafts are operated to rock the pins to cause them to take and release the sheet. As shown, the rock shafts are provided with arms 14, which carry cam rolls 15 running in the groove 16 of a plate cam 17, loosely mounted on the shaft 2, before referred to.

In accordance with the invention, means are provided whereby these shafts may be actuated to take and release the sheets, depending on the speed of the cylinder, and these means will be controlled from the mechanism for driving the machine so that as the machine speed varies the time of the taking and releasing movements of the pins will be varied. While these may be effected in various ways, in the particular construc-

tion illustrated this is done by shifting the position of the cam, the cam, as before stated, being loosely mounted on its shaft. In the best constructions, furthermore, where the printing machine is driven and controlled by an electric motor, these cam shifting devices will also be electrically operated so that a variation in the motor speed will cause a shifting of the cam. In the construction shown in Figs. 1 and 4 there is provided a controller of any desired type, and indicated diagrammatically at 20. This controller is provided with a movable contact piece 21 and, through resistances 22 and a motor circuit *a*—*b*, controls the motor speed and consequently the speed of the machine, it being understood that the folder 1 is driven at machine speed through suitable gearing, not shown.

Tapped in the motor circuit *a*—*b* is a line *c* which is in circuit with the coils of a progressive solenoid 23, this solenoid being shown as having six coils 24, 25, 26, 27, 28 and 29. These coils are, through circuits and contact points 30, 31, 32, 33, 34 and 35, controlled by a contact maker 36, this contact maker being carried on the end of a rod or bar 37 connected with the operating core shaft 38 of the controller 20, before referred to. It will be seen with this construction that as the controller 20 is operated to vary the motor speed and consequently the speed of the machine the coils of the solenoid will be energized and more or less pull will be exerted by the core shaft thereof. This movement of the progressive solenoid is utilized for varying the position of the cam. While various mechanical constructions may be provided for effecting this, as shown, the outer face of the cam is provided with a block 40, to which is secured one end of an operating rod 41, which has a sliding movement in spaced bearing blocks 42. This rod is a split rod, the ends of the rod being adjustably united by a coupling nut 43. The rod is moved to shift the cam against a heavy spring 44, one end of which bears against a collar 45, the other end of which bears against a washer and bracket 42, before referred to.

This rod is given a longitudinal movement to effect the shifting of the cam from the solenoid through the following connections: The core shaft 46 of the solenoid is provided with an extension 47, at the upper end of which is secured a cam block 48 having an inclined face 49; this cam block has a movement between a bracket 50 and a collar or block 51 having an inclined face 52, this incline corresponding to the incline of the cam block 48; the stem 47 is moved preferably against a spring 52, which bears against a nut 53 on the core shaft of the solenoid and against a foot 54 depending from the bracket 50, before referred to.

With this construction, as the speed of the machine is increased or decreased by the controller 20, the solenoid 23 is operated to shift the cam which controls the movement of the pins so that when the machine is starting or running slow the pins release the sheet a little later than when the machine is running fast, so that the sheet is freed from the pins at the correct time, irrespective of the speed of the cylinder, without damage to the sheet, and a correct folding of the sheet is effected.

It is, of course, obvious that various mechanical constructions may be effected for producing the same result, and one such other form has been illustrated in Fig. 3 of the drawings. In the construction as shown a fluid pressure operating mechanism is illustrated in which the pressure is produced by hydraulic means. As shown, there is provided a pair of hydraulic cylinders 55, 56 in which operate pistons 57, 58; pipes 59, 60 connect opposite sides of these cylinders, these cylinders being so proportioned as to permit the required flow of liquid on each side of the pistons. The piston 58 is connected to the cam or rod construction diagrammatically indicated by 61, or may be the same as that heretofore described. The piston 57 is connected to the rod 37 depending from the core shaft 38 of the controller 20.

While the invention has been shown and described in its preferred forms, it will be understood that various changes may be made in the specific construction and arrangement of the pin cam operating mechanisms, and that such changes will be within the scope of the invention as defined by the claims annexed.

What I claim is:

1. The combination with a printing machine and means for driving it, of a folding cylinder, sheet taking devices carried thereby, means for actuating the devices to take and release a sheet, and means controlled from the driving mechanism of the machine for varying the time of operation of the actuating devices as the machine speed varies.

2. The combination with a printing machine and means for driving it, of a folding cylinder, sheet taking devices carried thereby, a cam for actuating the devices to take and release a sheet, and means controlled from the driving mechanism of the machine for shifting the cam to vary the time at which the sheet taking devices take and release a sheet as the machine speed varies.

3. The combination with a printing machine and means for driving it, of a folding cylinder, sheet taking devices carried thereby, means for actuating the devices to take and release a sheet, and electrically operated means controlled from the driving

mechanism of the machine for varying the time of operation of the actuating devices as the machine speed varies.

4. The combination with a printing machine and means for driving it, of a folding cylinder, sheet taking devices carried thereby, a cam for actuating the devices to take and release a sheet, and electrically operated means controlled from the driving mechanism of the machine for varying the time at which the sheet taking devices act to take and release a sheet as the machine speed varies.

5. The combination with a printing machine, of a driving motor, a circuit therefor, a folding cylinder, sheet taking devices carried thereby, means for actuating the devices to take and release a sheet, and electrical means in the motor circuit for varying the time of operation of the actuating devices as the machine speed varies.

6. The combination with a printing machine, of a motor for driving it, a circuit for the motor, a folding cylinder, sheet taking devices carried thereby, a cam for actuating the devices to take and release a sheet, and electrically operated means in the motor circuit for shifting the cam as the motor speed varies.

7. The combination with a printing machine, of a motor for driving it, a motor circuit, a folding cylinder, sheet taking devices carried thereby, a cam for actuating the devices to take and release a sheet, a solenoid in the motor circuit, means for energizing the solenoid in accordance with the speed of the motor, and connections between the solenoid and the cam.

8. The combination with a printing machine, of a motor for driving it, a motor circuit, a folding cylinder, sheet taking devices carried thereby, means for actuating the devices to take and release a sheet, a controller for the motor, and connections operated from the controller for varying the time of operation of the actuating devices as the controller is operated.

9. The combination with a printing machine, a motor for driving it, a folding cylinder, sheet taking devices carried thereby, a cam for actuating the devices to take and release a sheet, a controller, and connections from the controller for shifting the cam to vary the time of operation of the sheet taking devices.

10. The combination with a printing machine, of a folding cylinder, sheet taking devices carried thereby, means for actuating the devices to take and release a sheet, a solenoid for varying the time of operation of the sheet taking devices, and a circuit for the solenoid.

11. The combination with a printing machine, of a folding cylinder, sheet taking devices carried thereby, a cam for actuating the devices, a solenoid for shifting the position of the cam, and a circuit for the solenoid.

12. The combination in a folding mechanism, of a folding cylinder, sheet taking devices carried thereby, a cam for actuating the devices, a solenoid for shifting the cam, and a spring against which the cam is shifted.

13. The combination with a folding mechanism having sheet taking devices, means for actuating the devices to take and release a sheet, a controller, and connections from the controller for automatically varying the time of operation of the actuating devices as the speed of the folding mechanism varies.

14. The combination in a folding mechanism, of a folding cylinder, sheet taking devices carried thereby, a cam for actuating the devices, a progressive solenoid for shifting the position of the cam, a circuit for the solenoid, and a controller in the circuit.

15. The combination in a folding mechanism, of a folding cylinder, sheet taking devices carried thereby, a cam for actuating the devices, a progressive solenoid for shifting the position of the cam, a circuit for the solenoid, a spring against which the cam is shifted, and a controller in the circuit.

In testimony whereof, I have hereunto set my hand.

OSCAR C. ROESEN.