Jan. 6, 1953 J. A. McNALLY 2,624,281

PROJECTILE

Filed Sept. 10, 1947 2 SHEETS—SHEET 1

FIG. 1

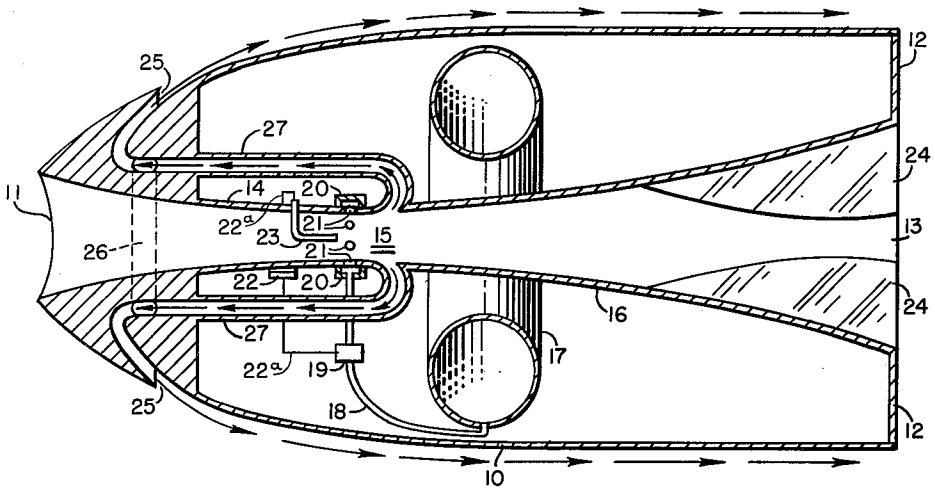

FIG. 2

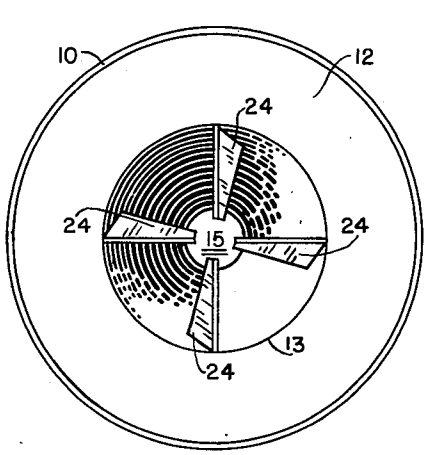

FIG. 3

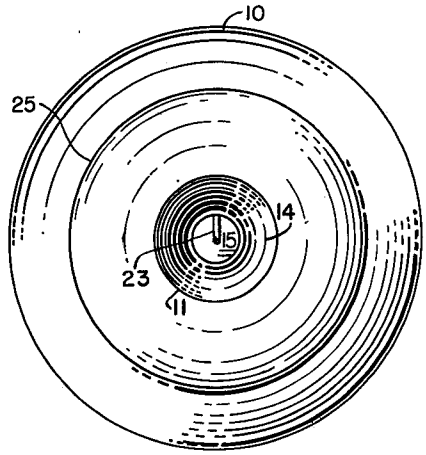

Inventor
JAMES A. MC NALLY

By M. Hayes

Attorney

PROJECTILE

Filed Sept. 10, 1947 2 SHEETS—SHEET 2

FIG. 4

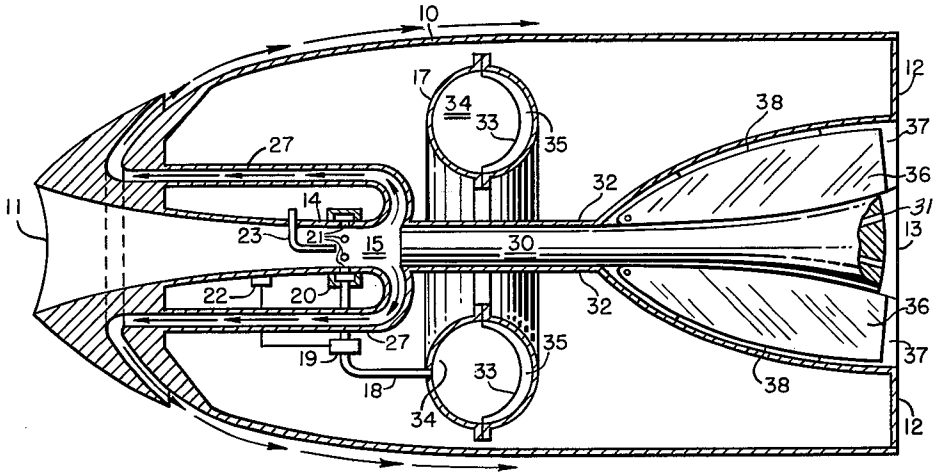

FIG. 5

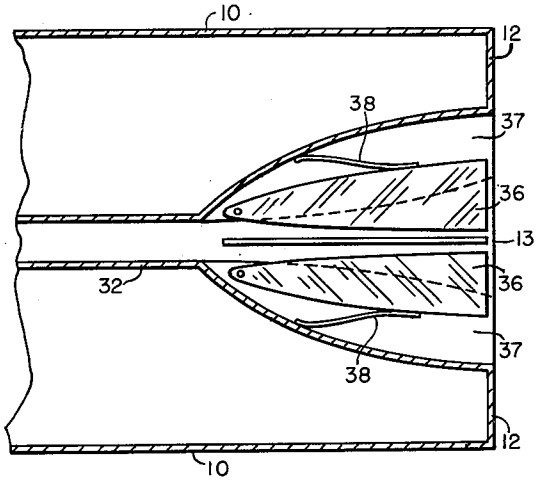

Inventor
JAMES A. MC NALLY

By M. A. Hayes
Attorney

Patented Jan. 6, 1953 2,624,281

UNITED STATES PATENT OFFICE

2,624,281

PROJECTILE

James A. McNally, United States Navy

Application September 10, 1947, Serial No. 773,283

2 Claims. (Cl. 102—49)

(Granted under Title 35, U. S. Code (1952), sec. 266)

1

This invention relates to projectiles and more particularly to projectiles including novel means for increasing the range and accuracy thereof.

Heretofore, projectiles or missiles, such as rifle shells, bombs, rockets and projectiles carrying scientific instruments for determining physical conditions at remote locations, have been accelerated from zero velocity and projected to the desired target or location through application of externally applied forces thereto, or upon operation of a self-contained power unit, such as a rocket mechanism. In all instances the projectile is accelerated to a maximum velocity determined by the characteristics of the propulsion means, and therefore, the range, accuracy and penetration force of such projectiles are limited thereby.

It is therefore an object of the present invention to provide novel means for increasing range and accuracy of projectiles, missiles and the like.

Another object is to provide a projectile including novel propulsion means operable when a predetermined velocity is imparted to the projectile for further accelerating the projectile to extremely high velocities whereby an increase in range and accuracy thereof is obtained.

Another object is to provide in a projectile adapted to be accelerated to an initial velocity upon application of an externally applied force thereto, novel means operable when the projectile attains said initial velocity to further accelerate the projectile.

Another object is to provide in a projectile of the type adapted to be accelerated to an initial velocity upon application of an externally applied force thereto, a hot motive fluid reaction means operable when the projectile attains a predetermined velocity for further accelerating the projectile to a previously unattainable high velocity.

Still another object of the present invention is to provide a projectile having self-contained motive means for accelerating the projectile from zero velocity to a predetermined velocity and hot motive fluid reaction means for further accelerating the projectile after the self-contained motive means is dissipated.

Still another object is to provide novel means for improving the areodynamic characteristics of projectiles.

Other objects and features of the present invention will appear more fully hereinafter upon consideration of the following detailed description in connection with the accompanying drawings which disclose several embodiments of the invention. It is to be expressly understood however, that the drawings are designed for purposes

2

of illustration only and are not to be construed as a definition of the limits of the invention, reference for the latter purpose being had to the appended claims.

In the drawings, wherein similar reference characters denote similar parts throughout the several views:

Fig. 1 is a diagrammatic showing, in section, of a projectile embodying the principles of the present invention;

Fig. 2 is a profile view of the rear end of the projectile shown in Fig. 1;

Fig. 3 is a profile view of the forward end of the projectile disclosed in Fig. 1;

Fig. 4 is a diagrammatic illustration, in section, of a projectile constructed in accordance with another embodiment of the present invention, and

Fig. 5 is an illustration of a feature of the embodiment disclosed in Fig. 4.

With reference more particularly to Fig. 1 of the drawings, a projectile of the type adapted to be accelerated to an initial velocity upon application of an external force thereto, is disclosed therein constructed in accordance with the principles of the present invention. The projectile includes a cylindrical casing 10 of streamlined form for motion to the left as viewed in the drawing. The diameter of the casing 10 is constant at the rear portion thereof while the forward portion possesses a gradually decreasing diameter extending toward the forward end and terminating in a cylindrical opening 11. The rear end of the casing 10 is terminated by a wall 12 having an opening 13 therein for the purpose that will appear more fully hereinafter. A cylindrical conduit 14, of gradually decreasing diameter, is secured at the large diameter end thereof to the casing 10 at the periphery of the opening 11. The conduit 14 extends rearwardly of the casing 10, in symmetrical relation with respect to the longitudinal axis thereof, and terminates at the input of a high pressure or combustion chamber 15. A high velocity discharge nozzle 16 is provided between the output of the chamber 15 and the opening 13. The nozzle 16 extends, with gradually increasing diameter, from the output of the chamber 15, in symmetrical relation with the longitudinal axis of the casing 10, to the opening 13. An annular fuel reservoir 17, of cylindrical cross section, is positioned within the casing 10, in symmetrical relation with respect to the longitudinal axis thereof, and in close proximity with the chamber 15. Fuel conduit 18 is connected in fluid communication with the reservoir 17 at a point on the periphery thereof. The conduit 18 is connected through electrically op-

erated valve 19 to annular fuel manifold 20 associated with the combustion chamber 15. A plurality of fuel injection nozzles 21 are radially positioned in the wall of the chamber 15 to form communications between the manifold 20 and the combustion chamber 15. The valve 19 is normally biased in a closed position and means are provided to move the valve 19 to an open position to form a fuel communication between the reservoir 17 and the chamber 15 when a predetermined pressure exists within the conduit 14. Such means includes a pressure responsive control device 22 mounted in the conduit 14. The device 22 functions in response to a predetermined pressure within the conduit 14 to apply, through conductor 22 a signal to energize the valve 19 in manner described heretofore. A suitable igniter means 23, which may take the form of a spark plug or a chemically treated metallic wire for producing a glow discharge when fluid at high velocity passes thereover, is provided in the combustion chamber 15 to ignite the combustive mixture therein.

When the projectile is accelerated to an initial velocity due to the application of an external force thereto, such as for example, the forces applied upon firing the projectile from a rifle, or the force of gravity when the projectile is utilized as an aerial bomb, air at high velocities is injected or rammed into the opening 11, and, due to the gradually decreasing diameter of the conduit 14, the air is injected into the combustion chamber 15 at extremely high pressures. Due to the centrifugal forces created by the rotating projectile, fuel within the reservoir 17 is forced against the outer peripheral wall thereof to apply fuel to the conduit 18. The reservoir 17 may be pressurized in conventional manner to force the fuel through conduit 18 against valve 19. When the pressure within the conduit 14 attains a predetermined value to operate the device 22, the valve 19 is moved to open position thereby supplying fuel under pressure to the manifold 20 and into the combustion chamber 15 through injection nozzles 21. The injected fuel is mixed with the compressed air to form a highly combustive mixture within the chamber 15 which is exploded by the igniting means 23, automatically or in response to operation of the device 22. When combustion occurs a source of hot motive fluid is generated in the chamber 15. The hot motive fluid is exhausted at high velocities through discharge nozzle 16 applying a force to the projectile to increase the forward motion thereof.

In order to impart further rotation to the projectile to thereby increase the accuracy thereof, a plurality of reaction vanes 24 are mounted in the exhaust nozzle 16 extending inwardly toward the longitudinal axis of the casing 10. As shown more clearly in Fig. 2 of the drawing, the vanes 24 are angularly mounted with respect to the longitudinal axis of the casing 10 to provide reaction members responsive to the hot motive fluid passing thereover for imparting rotation to the projectile about the longitudinal axis thereof.

As previously mentioned, means are also provided by the present invention for improving the aerodynamic characteristics of projectiles to further increase the range and accuracy thereof. Such means functions to discharge a high velocity hot motive fluid jet along the outer surface of the casing 10, throughout the entire diameter thereof, from a point adjacent the opening 11, rearwardly toward the wall 12. The presence of a high velocity fluid jet along the outer surface of the casing 10 effectively energizes the boundary layer formed thereon, to reduce friction, to prevent separation and to increase the overall aerodynamic characteristics of the projectile. As shown in Figs. 1 and 3, the foregoing means comprises a circumferential discharge nozzle 25 located in the forward end of the casing 10, adjacent and rearwardly of the opening 11. The nozzle 25 is positioned to discharge a high velocity fluid jet rearwardly along the outer surface of the casing 10 throughout the entire area thereof. The nozzle 25 extends inwardly toward the longitudinal axis of the casing 10 and terminates in a circumferential manifold 26. A plurality of conduits 27 form a fluid communication between the manifold 26 and the combustion chamber 15 in such a manner to transfer a portion of the hot motive fluid generated in the combustion chamber 15 to the manifold 26 for energizing the nozzle 25. In order to produce a high velocity fluid jet from the nozzle 25 the number of conduits 27, the dimensions of the nozzle 25, the manifold 26 and the conduits 27 are properly proportioned to maintain the required pressure relationships.

In Fig. 4 of the drawings a projectile having primary propulsion means, such as a rocket motor for accelerating the projectile to an initial velocity, is disclosed including novel features of the present invention. This embodiment includes certain features of the invention disclosed in Fig. 1, and similar elements are designated by corresponding reference numerals. The primary propulsion means comprises a rocket mechanism of conventional construction carried by a casing 30 including a plurality of rocket exhaust ports 31 in the rear end thereof. The casing 30 is designed for insertion in an exhaust nozzle 32 which also functions to form a discharge passage for the hot motive fluid generated in the combustion chamber 15, in a manner similar to the exhaust nozzle 16 of Fig. 1. Upon ignition of the primary propulsion means the projectile is accelerated thereby to a velocity determined by the characteristics thereof. As the energy of the primary propulsion means dissipates the forces applied to the forward end of the casing 30 by the pressures in the chamber 15 eject the casing 30 from the exhaust nozzle 32. After ejection of the casing 30, generated hot motive fluid exhausts through the nozzle 32 applying forces to further accelerate the projectile in a manner similar to operation of the Fig. 1 system.

In this embodiment means are provided for supplying fluid under pressure to the combustion chamber 15 independently of axial rotation of the casing 10. A resilient diaphragm 33, constructed of hydrocarbon resistant plastic material, is provided for separating the reservoir 17 into a fuel chamber 34 and an air chamber 35. The fuel chamber 34 communicates with the fuel conduit 18, while the air chamber 35 is initially supplied with air under suitable pressure to maintain the supplied fuel above a predetermined pressure throughout the period of operation.

Since the type of projectile disclosed in Fig. 4 is discharged from a smooth tube means are provided for imparting axial rotation thereto. The rocket mechanism exhaust ports 31 are angularly positioned with respect to the longitudinal axis of the projectile to impart rotation thereto during operation of the primary propulsion means. As shown in Fig. 5, the means for imparting rotation to the projectile after the casing 30 is discharged therefrom includes a plurality of reaction vanes 36 pivotally mounted in slots 37 angularly positioned in the casing 10 with respect to the longitudinal axis thereof. The vanes 36 are

urged inwardly toward the longitudinal axis of the projectile to extend within the nozzle 32 by the action of spring numbers 38. When the casing 30 is inserted into the exhaust conduit 32 the vanes 36 are forced into respective slots 37. The flow of hot motive fluid through the nozzle 32 reacts against the vanes 36 to impart rotation to the projectile in a manner similar to the arrangement shown in Fig. 1.

There is thus provided by the present invention novel means for increasing the range and accuracy of projectiles. The novel means is so characterized to be readily utilized in connection with rifle shells, rockets fired from smooth tubes and aerial bombs. Moreover, the novel means are constructed in such a manner as to operate automatically when the projectile attains a predetermined velocity to generate a source of energy for imparting further acceleration thereto. Furthermore, novel means are provided by the present invention for energizing the boundary layer formed on the outer surface of the projectile to improve the aerodynamic characteristics thereof.

Although several embodiments of the present invention have been disclosed and described herein it is to be expressly understood that various changes and substitutions may be made therein without departing from the spirit of the invention as well understood by those skilled in the art. For example, automatic pressure responsive valvular means may be employed at the input and output ports of the combustion chamber 15 to provide intermittent operation if desired. Furthermore, it is to be expressly understood that the unused volume within the casing 10 is provided for carrying elements commensurate with the desired use of the projectile, such as explosive charges for example when the projectile is employed as a destructive missile. Reference therefore will be had to the appended claims for the definition of the limits of the invention.

The invention described herein may be manufactured and used by or for the Government of the United States of America for governmental purposes without the payment of any royalties thereon or therefor.

What is claimed is:

1. In a projectile adapted to be discharged from a smooth bore means including a casing, means forming a longitudinal opening through said casing, said opening including an input portion extending from the forward end of said casing with gradually decreasing cross-sectional area, a high pressure area of reduced cross-sectional area communicating with said input portion and an exhaust portion extending with gradually increasing cross-sectional area from said high pressure area to the rear end of said projectile, conduit means leading from said high pressure area, a nozzle exhausting at the forward outer surface of the projectile and connected to said conduit means to discharge a high velocity fluid jet rearwardly along the outer surface of said casing throughout the entire area thereof, said exhaust portion including a plurality of movable reaction vanes pivotably mounted in slots annularly positioned in said casing with respect to the longitudinal axis thereof, said reaction vanes imparting rotation to said projectile, propulsion means mounted in said exhaust portion operable to accelerate said projectile to a certain velocity, means including an annular fuel reservoir surrounding said high pressure area and a fuel conduit, means in said fuel conduit to control the amount of fuel from said annular reservoir to said high pressure area for generating a source of hot motive fluid in said pressure area for discharge through said exhaust conduit to further accelerate said projectile after discharge of said propulsion means.

2. In a projectile adapted to be discharged from a smooth bore means including a casing, means forming a longitudinal opening through said casing, said opening including an input portion extending from the forward end of said casing with gradually decreasing cross-sectional area, a high pressure area of reduced cross-sectional area communicating with said input portion and an exhaust portion extending with gradually increasing cross-sectional area from said high pressure area to the rear end of said projectile, conduit means leading from said high pressure area, a nozzle exhausting at the forward outer surface of the projectile and connected to said conduit means to discharge a high velocity fluid jet rearwardly along the outer surface of said casing throughout the entire area thereof, said exhaust portion including a plurality of movable reaction vanes pivotably mounted in slots annularly positioned in said casing with respect to the longitudinal axis thereof, said reaction vanes imparting rotation to said projectile, propulsion means mounted in said exhaust portion operable to accelerate said projectile to a certain velocity, said propulsion means mounted for discharge from said exhaust portion by the pressure in said pressure area after dissipation of the energy thereof, means including an annular fuel reservoir surrounding said high pressure area and a fuel conduit, means in said fuel conduit to control the amount of fuel from said annular reservoir to said high pressure area for generating a source of hot motive fluid in said pressure area for discharge through said exhaust conduit to further accelerate said projectile after discharge of said propulsion means.

JAMES A. McNALLY.

REFERENCES CITED

The following references are of record in the file of this patent:

UNITED STATES PATENTS

Number	Name	Date
1,376,316	Chilowsky	Apr. 26, 1921
1,994,490	Skinner	Mar. 19, 1935
2,246,429	Brandt	June 17, 1941
2,410,538	Walton	Nov. 5, 1946
2,419,866	Wilson	Apr. 29, 1947

FOREIGN PATENTS

Number	Country	Date
1,734	Great Britain	1876
14,000	Great Britain	1896
126,325	Great Britain	May 15, 1919
637,043	Germany	Oct. 19, 1936
866,598	France	May 26, 1941