Office de la Propriété Intellectuelle du Canada
Un organisme d'Industrie Canada

Canadian Intellectual Property Office
An agency of Industry Canada

CA 2207150 C 2005/07/12

(11)(21) 2 207 150

(12) BREVET CANADIEN
CANADIAN PATENT

(13) C

(22) Date de dépôt/Filing Date: 1997/05/26

(41) Mise à la disp. pub./Open to Public Insp.: 1998/04/01

(45) Date de délivrance/Issue Date: 2005/07/12

(30) Priorité/Priority: 1996/10/01 (8-294331) JP

(51) Cl.Int.^{6}/Int.Cl.^{6} B65G 47/14, G07D 9/00, G07D 1/00

(72) Inventeur/Inventor:
ABE, HIROSHI, JP

(73) Propriétaire/Owner:
ASAHI SEIKO KABUSHIKI KAISHA, JP

(74) Agent: ROBIC

(54) Titre : APPAREIL POUR EJECTER UNE GRANDE QUANTITE DE PIECES DISCOIDES
(54) Title: HIGH-CAPACITY APPARATUS FOR EJECTING DISK BODIES

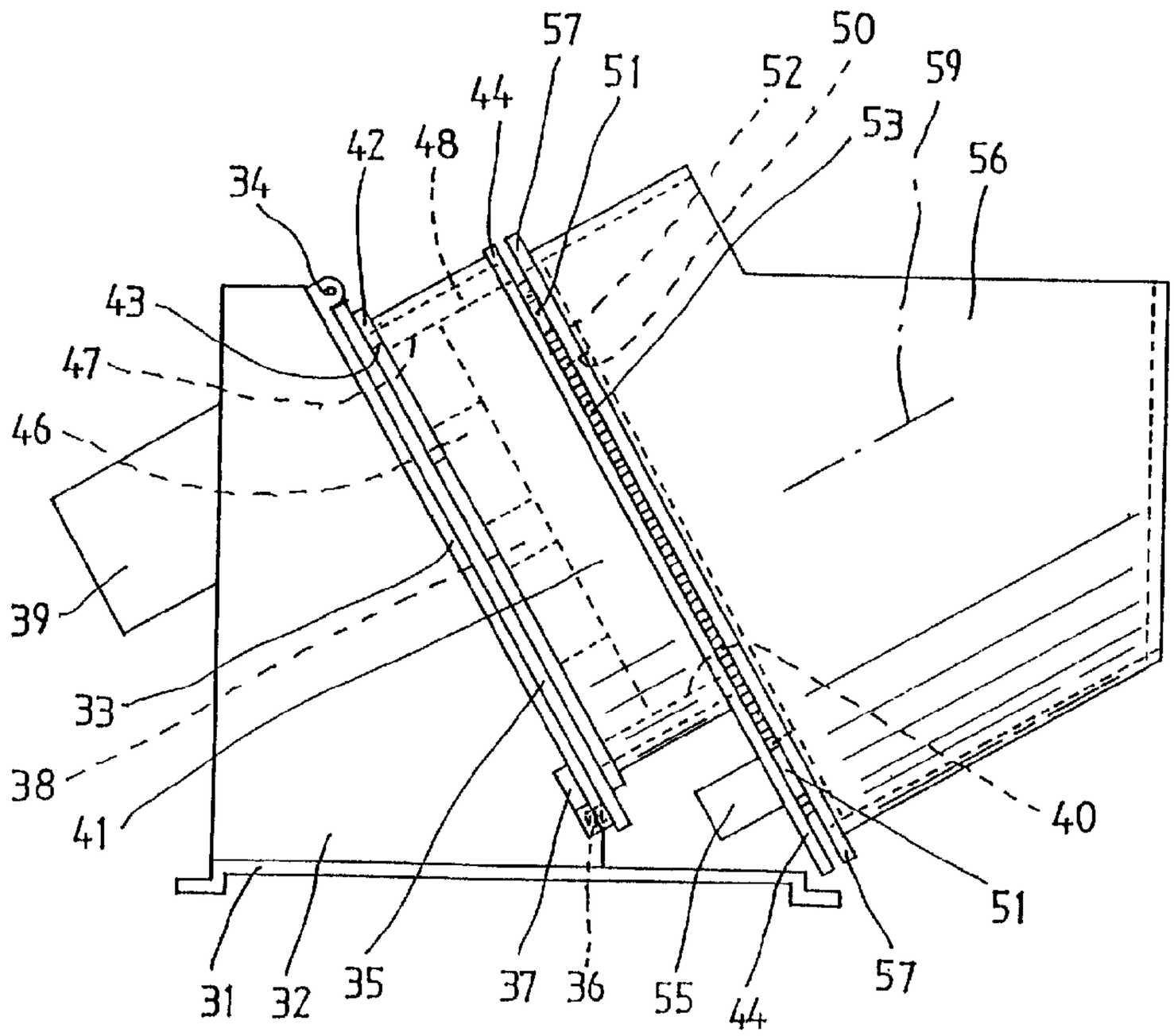

(57) Abrégé/Abstract:
A large-volume-shaped apparatus for ejecting disk bodies comprises at least first tank means which is formed tubular-shaped and provided with diagonally and an outlet for the disk bodies is formed in the lower edge opening thereof. Means for ejecting disk bodies which is provided in the substantially setting up within this first tank means and provided with rotatably; means for conveying disk bodies which is formed a big ring form and provided with rotatably on the upper edge opening of said first tank means. Second tank means which is in tubular form and provided to communicate to said means for conveying said disk bodies.

ABSTRACT OF THE SPECIFICATION:

A large-volume-shaped apparatus for ejecting disk bodies comprises at least first tank means which is formed tubular-shaped and provided with diagonally and an outlet for the disk bodies is formed in the lower edge opening thereof. Means for ejecting disk bodies which is provided in the substantially setting up within this first tank means and provided with rotatably; means for conveying disk bodies which is formed a big ring form and provided with rotatably on the upper edge opening of said first tank means. Second tank means which is in tubular form and provided to communicate to said means for conveying said disk bodies.

HIGH-CAPACITY APPARATUS FOR EJECTING DISK BODIES

This invention relates to an ejecting apparatus for sending out disk bodies one by one.

Especially, this invention relates to an ejecting apparatus for forcibly sending out disk bodies one by one which are hugely thrown into loose loading conditions.

This invention concretely relates to a high-capacity ejecting apparatus which can forcibly and one by one send out disk bodies, such as coins with disk forms which are money or medals with disk forms which are used for games and so on, which are thrown into loose loading conditions.

This invention more concretely relates to a disk body ejecting apparatus which is suitable for the game apparatus which uses a great deal of medals.

PRIOR ART

In the past, a coin ejecting apparatus which is equipped with a pan-shaped and pipe-shaped tank for receiving a stack of coins in loose loading conditions and a coin sending disk which is set up approximately in this tank and becomes rotatably is known.

This coin ejecting apparatus is used in various ways for sending out by picking up coins one by one from the inside of said tank with said coin sending disk.

In this type of coin ejecting apparatus, the one which can eject coins at high speed and continuously is disclosed in the specification of United States Patent No. 5,122,094.

The perspective view of the coin sending-out apparatus which is elucidated in this bulletin is shown in Fig. 4 and the section which was seen from the side is shown in Fig. 5.

Using Fig.4 and Fig.5, the operation of said coin sending-out apparatus is summarily explained here.

First, by means of an electric motor (omitting illustration), a coin sending disk 2 with a deep plate form is rotated in the clockwise direction in a big tubular tank 1 through a center rotating axis 12 (referring to Fig.4).

By the rotating of this disk 2, the coins in the tank 1, i.e. the coins in the dram-shaped disk 2 receives the agitating effects by the projections 6 which are formed inside of the surrounding wall 4 of the disk 2.

As the result, the coin in the disk 2 goes into coin receiving holes 5 which are opened circumferentially in the bottom of disk 2.

The coins which went into the receiving holes 5 go through the receiving holes 5 and is slidably held on the surface of big square support plate 11.

After this, the coin is sent out by a coin outlet 23 (It refers to Fig. 4 left) by means of coin sending nails (omitting illustration) formed on the reverse side of disk 2, a guiding plate 15 formed on the surface of support plate 11, and a flange surrounding wall 22 for arranging the tank 1.

When saying in other words, the coin which is pushed and moved with the sending nail (omitting illustration) and is guided by the flange surrounding wall 22 of tank 1 and the guiding plate 15.

Then, finally, said coin is guided by a fixed guide roller (omitting illustration) and a movable guide roller 26 and pumped out from the coin outlet 23.

Problem which the invention tries to solve

However, there was a problem that the payout of disk bodies ends immediately, because the tank comparatively has a small capacity at high speed, in the above-mentioned disk body ejecting apparatus which can pay out coins of disk bodies continuously at high speed.

Especially, where there is a game apparatus using a great deal of medals, there was a problem that medal shortage occurs and damages the attractive game on the way of game playing.

This invention is, wherein the disk body ejecting apparatus such as the coin or the medal, the one which was developed at the objects for improving the receiving capacity of disk bodies paid out and substantially reducing the replenishment times of the disk bodies.

Means to solve problems

This invention is a large-volume-shaped apparatus for ejecting disk bodies comprising at least: first tank means which is formed a tubular-shaped and provided with diagonally and an outlet for the disk bodies is formed in the lower edge opening thereof; means for ejecting disk bodies which is provided in the substantially setting up within this first tank means and provided with rotatably; means for conveying disk bodies which is formed a big ring form and provided with rotatably on the upper edge opening of said first tank means; and second tank means which is formed a tubular form and provided to communicate to said means for conveying said disk bodies.

Further, this invention is a disk body ejecting apparatus characterized in that a central axis line of said second tank means is more downwardly than the central axis line of said first tank means. Also, this invention is a disk body ejecting apparatus characterized in that said means for conveying disk bodies is equipped with means for holding the disk body in the surface thereof.

More, this invention is a disk body ejecting apparatus characterized in that that said means for conveying disk bodies is equipped with a gear.

In addition, this invention is a disk body ejecting apparatus characterized by providing sensor means for detecting

the weight of said first tank means.

Embodying form of the invention

This invention is explained below, referring to the attached drawing of the embodying.

Fig. 1 is a summarized side view which shows one embodiment by this invention, Fig. 2 is a section end view at the subject portion which is seen the front of Fig. 1 from the diagonal top, and Fig. 3 is a side view which shows the subject portion of Fig. 1.

Fig. 6 is a front view which shows the subject portion of another embodiment in accordance with this invention.

A reference numeral 31 which is shown in the lower portion of Fig. 1 is a big rectangular base plate and, this base plate 31 is levelly installed within game machines which uses medals and so on. A thing with a triangle form which is shown in Fig. 1 is a frame 32 and, the frame 32 is on either side at one pair and is fixed at the end of either side of the base plate 31 respectively in the setting up. 33 which is shown in Fig. 1 is a rectangular fixation plate, and it inclines toward the setting up condition with the frame 32 on either side and is fixed.

In case of Fig. 1, the acute angle of the base plate 31 and the fixation plate 33 is about 60 degrees.

Further, in the both edge part at the upper edge of fixation plate 33, hinges 34, 34 are formed respectively. 35 on the fixation plate 33 is a rectangular movable plate, and the both edges at the upper edge of this movable plate 35 are pivoted respectively by the hinges 34, 34 and become rotatably. 36 of the lower portion of fixation plate 33 is a coil-shaped spring and, this spring 36 is provided between the lower edge both end parts of fixation plate 33 and the lower edge both end parts of movable plate 35, being slidably without loosing.

Concretely, a hole with bottom is formed beforehand

at the surface of the fixation plate 33 which faces the movable plate 35, and the spring 36 is slidably inserted into the hole, being projectingly. Therefore, when the movable plate 35 becomes light weight, the movable plate 35 can be slightly rotated upwardly about the hinge 34 under the operation of spring 36.

A thing with the small box form which is on the lower portion in the underside of fixation plate 33 is a switch 37 such as a limit switch and, this switch 37 is turned on or off by the approaching or leaving of movable plate 35.

41 which is shown on the movable plate 35 is a short tubular tank. At the first tank 41, a flange 42 which protrudes outside is formed at the opening edge of the lower portion.

Through this first flange 42, the tank 41 is fixed on the movable plate 35 by means of bolt-nuts, welding and so on.

Further, an outlet 43 of the disk body is formed at the part of flange 42.

A second flange 44 which is prominent outside is formed by the upper opening edge on the tank 41.

The lower portion of this flange 44 is mainly formed for the outside as shown by Fig. 2.

46 in the tank 41 is a disk with deep plate form and, this disk 46 is rotated by an electric motor 39, a deceleration apparatus which is omitted on illustration, and a rotating axis 38.

In addition, as clear from the drawing, the rotating axis 38 is on the central axis line of the disk 46 and the first tank 41.

In case of illustration, the acute angle of this rotating axis 38 and the base plate 31 is about 30 degrees.

Also, 47 in the drawing is a pierced hole and, a plurality of pierced holes 47 are made on the circumference of disk 46 and moreover opened at regular intervals, and the said pierced hole is a means for piling and storing disk bodies.

51 on the second flange 44 is a small gear and, as shown in Fig. 2, these three gears 51 for three-point support

are circumferentially provided and for regular intervals and moreover rotatably.

52 on these gears 51 is a big ring.

This ring 52 is a means for conveying disk bodies as described later. In the underside of this ring, a big gear 53 is formed and this gear 53 meshes with three gears 51.

Also, in the surface of ring 52, as shown at Fig. 2, a large number of approximately U-shaped recesses 54 are formed circumferentially and at equal intervals.

55 (referring to Fig. 1) which is shown in the lower portion of second flange 44 is an electric motor, and this electric motor 55 is a means for rotating the ring 52 through gears 51, 53.

56 which is shown in the right of Fig. 1 is a second tank of big tubular form and a flange 57 is outwardly formed by the opening edge of the lower portion of this tank 56.

This flange 57 is mounted to the second flange 44 through the three gears 51. Further, as for the mounting of these flanges 44, 57, the illustration is omitted.

However, bolts and nuts are used is good of course.

Also, as clear from Fig. 1, the central axis line 59 of second tank 56 is situated on the lower portion than the rotating axis 38 which is the central axis line of the first tank 41.

Embodiment

As for this embodiment to be equipped with above-mentioned constitution, first, a lot of disk bodies are thrown into the first tank 41 and second tank 56 and are stored in the loose loading condition.

When the disk 46 is rotated by the electric motor 47 in this condition, the disk 46 is rotated in the clockwise direction, for instance (referring to the arrow at the lower portion of Fig. 2).

The disk bodies (omitting illustration) which are

accordingly made loose loading conditions in the first tank 41 and second tank 56 are piled into the pierced holes 49 of turning disk 46.

The disk body which is situated on the lowest portion in said pierced hole is slidably moved on the movable plate 35 and, by means of the projection arm (omitting illustration), the disk bodies are forcibly sent out to the outlet 43 one by one.

When explained in detail, by the rotation of disk 46 with a deep plate form, the disk bodies (omitting illustration) are agitated with the projections (omitting illustration) which are formed inside of the surrounding wall 48 of disk 46.

As the result, the disk bodies in disk 46 fall into the pierced hole 47 in the bottom of disk 46.

The disk body which went into the pierced hole 47 goes through the pierced hole 47 and is slidably held on the surface of big rectangular movable plate 35.

After this, the disk body is ejected to the outlet 23 which is shown in Fig. 1 by sending nails (omitting illustration) which are formed on the underside of disk 46, a guidance plate (omitting illustration) which was formed in the surface of movable plate 35 and the flange 42 for mounting the tank 41.

Like mentioning above, most of the disk bodies in the first tank 41 are ejected from the outlet 43.

However, at the lower portion of second tank 56, the disk bodies stay behind.

When the disk bodies in the first tank 41 becomes little in the weight, the load of movable plate 35 is reduced and the elasticity power in spring 36 acts.

Accordingly, the switch 37 is turned on and, the electrical motor 55 is driven and the ring 52 turns.

When the ring 52 is turned counterclockwise like the arrow which is shown in the upper portion of Fig. 2, the disk bodies (omitting illustration) which are in the lower portion of second tank 56 are fitted into a numerous number of recesses

54 to be held and are upwardly conveyed.

The upwardly conveyed disk bodies fall below, as the result, with the centrifugal force by the rotating of ring 52 and the self-weight of disk body C as shown on Fig. 2.

Falling disk bodies C go through the opening 50 of ring 52 and fall to the lower portion of first tank 41 (referring to the arrow of Fig. 3). As the result, a lot of disk bodies are stored up into the first tank 41 and the ejecting of the disk bodies which depends on the disk 46 is continued.

Further, the electric motor 55 may be made to stop some time later, after the switch 37 is turned on.

Also, when the disk bodies in the second tank 56 become scanty, the stopping of the motor 55 is permitted, of course.

Furthermore, the disk 41 is explained as a deep plate form. However, a disk with a thin disk form which is shown in the specifications of United States Patent No. 4,589,433 and United States Patent No. 5,181,881 may be used of course. In this case, a plurality of pins having each a circular axis form are planted at equal intervals on the limb part of the thin circular disk and these pins hitch to hold disk bodies and convey them. Also, it is good of course that a pin with a small strip of paper form or a square axis-shaped pin and so on may come across the replacement of said circular axis-shaped pin.

In addition, as for the embodiment, a large-sized ring 52 is illustrated and explained as the thing which has a plate form. However, it is of course permitted to make a ring 61 with a shallow plate-shaped form as shown by the chain line of Fig. 3.

Also, it is of course enough that the depth of the recess in ring 52 is equal to or more than one thickness of the disk body C.

The size of opening 50, the inclination angle of ring 52 (the acute angle with the base plate 31 is about 60 degrees

in case of the illustration) and the size of opening in the first tank (that is, the size of opening 40 in the disk 46 in case of the illustration) are decided, considering the direction of the fall of disk body C and so on. Also, in the above-mentioned embodiment, a lot of recesses 54 are formed in the surface of large-sized ring 52.

However, as described about said disk 46, pins 71 (referring to Fig. 6) with circular axis-shaped forms respectively or small strip-shaped pins or square axis-shaped pins, etc. may be used of course. Moreover, replacing the combination of spring 36 and switch 37, a sensor (omitting the illustration) such as a pressure sensitive element or a strain detective element etc. are of course permitted to be provided in the proper place on the surface of fixation plate 33. In this case, the movable plate 35 is removed and the part of the flange 42 of first tank 41 is directly contacted to one of these elements.

Incidentally, that a belt apparatus may be used instead of said gear apparatus 51, 54 is of course.

Also, that a combination of gear and belt may be used is of course.

Effect of the invention

As above mentioned, this invention adds a second tank to the first tank more and also disposes a conveying means from the second tank to the first tank. Therefore, as for this invention, the disk bodies can be housed in the communicated first and second tank in large quantities and the disk bodies which are left at the second tank, too, can be transferred to the first tank by the conveying means.

Therefore, the big effect that all of a great deal of disk bodies can be used is gotten.

Accordingly, as for the game apparatus which huge medals are especially used for, the big advantage that the attractiveness of the game is maintained without medal shortage

occurring is gotten.

BRIEF DESCRIPTION OF THE DRAWING

Fig. 1: it is a summarized side view which shows one embodiment according to the invention.

Fig. 2: it is a section end view at the subject portion which is seen the front of Fig. 1 from a diagonal top.

Fig. 3: it is a side view which shows the subject portion of Fig. 1.

Fig. 4: it is a perspective view which shows a prior art.

Fig. 5: it is a section which saw Fig. 4 from the side.

Fig. 6: it is a front view which shows the subject portion of another embodiments in accordance with this invention.

Explanation at the symbol

C: disk body, 36: spring (constituting a sensor means),

37: switch (constituting a sensor means),

41: first tank (constituting a first tank means),

43: outlet (constituting a first tank means),

46: disk (constituting a means for ejecting disk bodies),

47: pierced hole (constituting a means for ejecting disk hodies)

51: small gear, 52,

61: ring (constituting a means for conveying disk bodies),

53: large-sized gear,

54: recess hollow (constituting a means for conveying disk bodies, and also constituting a holding means of disk bodies),

56: second tank (constituting a second tank means),
57: flange (constituting a second tank means), and
59: central axis line of the second tank.

WHAT IS CLAIMED IS:

1. A high-capacity apparatus for ejecting disk bodies, comprising:

first tank means (41) for the disk bodies (C), which is in the form of a tube having openings at its upper and lower ends,

the central axis line (38) of the tube being inclined,

an outlet (43) for the disk bodies (C),

ejecting means (46, 47) for ejecting the disk bodies (C) from the outlet which is rotatable and provided within the lower opening of the first tank means,

second tank means (56) for the disk bodies (C) which is arranged to substantially communicate with the upper opening of the first tank means, and

a ring conveying means (52, 61) for conveying the disk bodies (C) from the second tank means to the first tank means,

characterized in that the outlet (43) is formed in the lower opening of the first tank means, and

in that the ring conveying means has the form of a large-sized, generally flat or saucer-shaped ring, provided rotatably between the upper opening of the first tank means (41) and the second tank means.

2. The disk body ejecting apparatus as set forth in claim 1, characterized in that a central axis line (59) of said second tank means is offset downwardly with respect to the central axis line (38) of said first tank means.

3. The disk body ejecting apparatus as set forth in claim 1 or 2, characterized in that said conveying means

(52, 61) is equipped with means (54) for holding the disk bodies (C) in the surface thereof.

4. The disk body ejecting apparatus as set forth in any one of claims 1 to 3, characterized in that said conveying means is equipped with a gear (53).

5. The disk body ejecting apparatus as set forth in any one of claims 1 to 4, characterized by a sensor means (36) for detecting the weight of said first tank means.

6. The disk body ejecting apparatus as set forth in any one of claims 3 to 5, characterized in that said holding means of the conveying means comprises recesses (54).

7. The disk body ejecting apparatus as set forth in any one of claims 3 to 5, characterized in that said holding means of the conveying means comprises pins (71).

8. Disk body ejecting apparatus according to any one of claims 1 to 7, characterized in that the ejecting means (46, 47) is provided substantially normal to the central axis line (38) of the first tank means (41) within the first tank means (41), and in that the second tank means is formed in a tubular form.

9. Disk body ejecting apparatus according to any one of claims 5 to 8, characterized in that the conveying means (52, 61) is rotated in response to a detection of a low weight of the first tank means by the sensor means (36).

FIG. 1

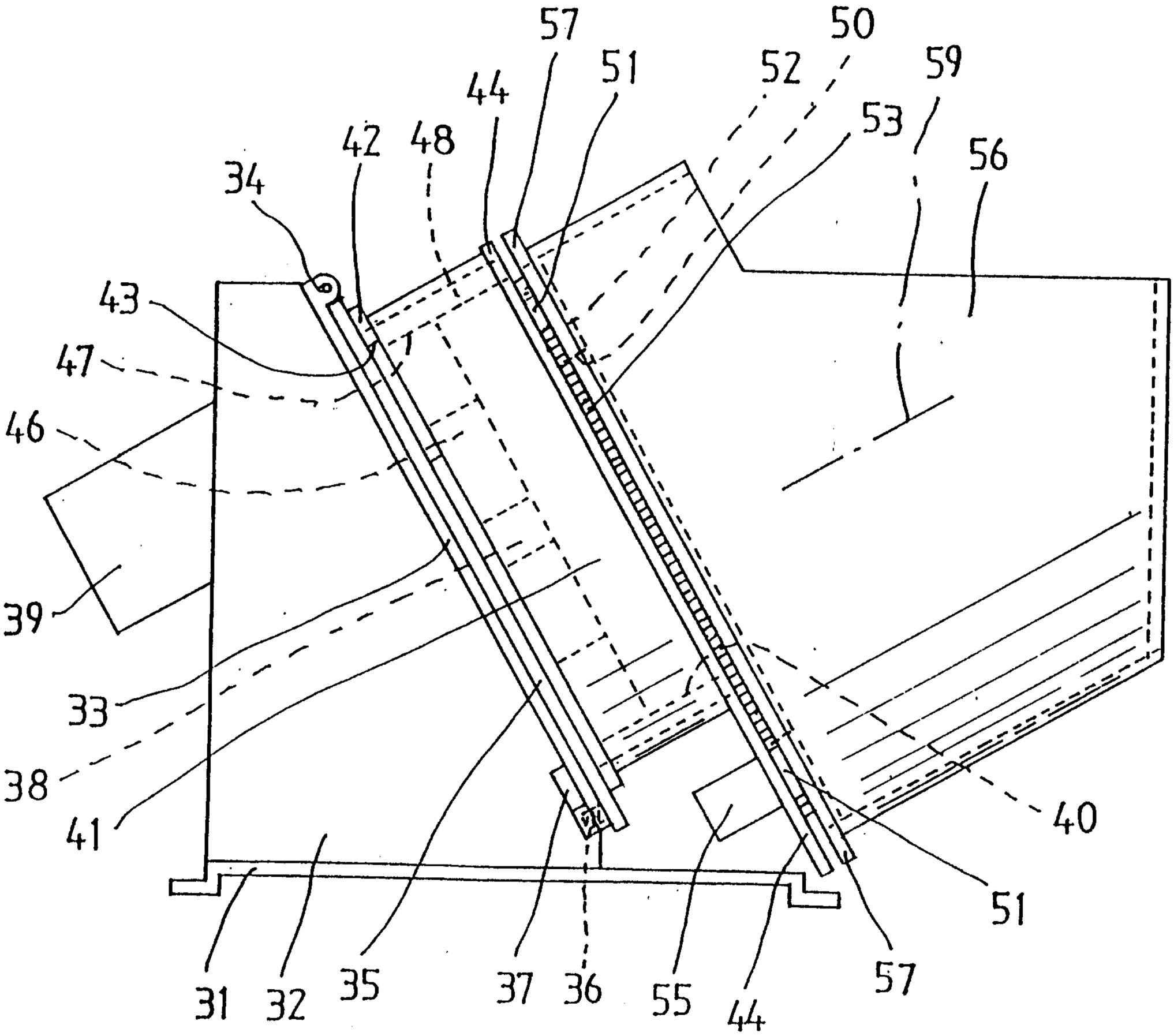
57
50
51
52
59
44
53
42
48
56
34
43
47
46
39
33
38
41
40
51
31
32
35
37
36
55
44
57

FIG. 2

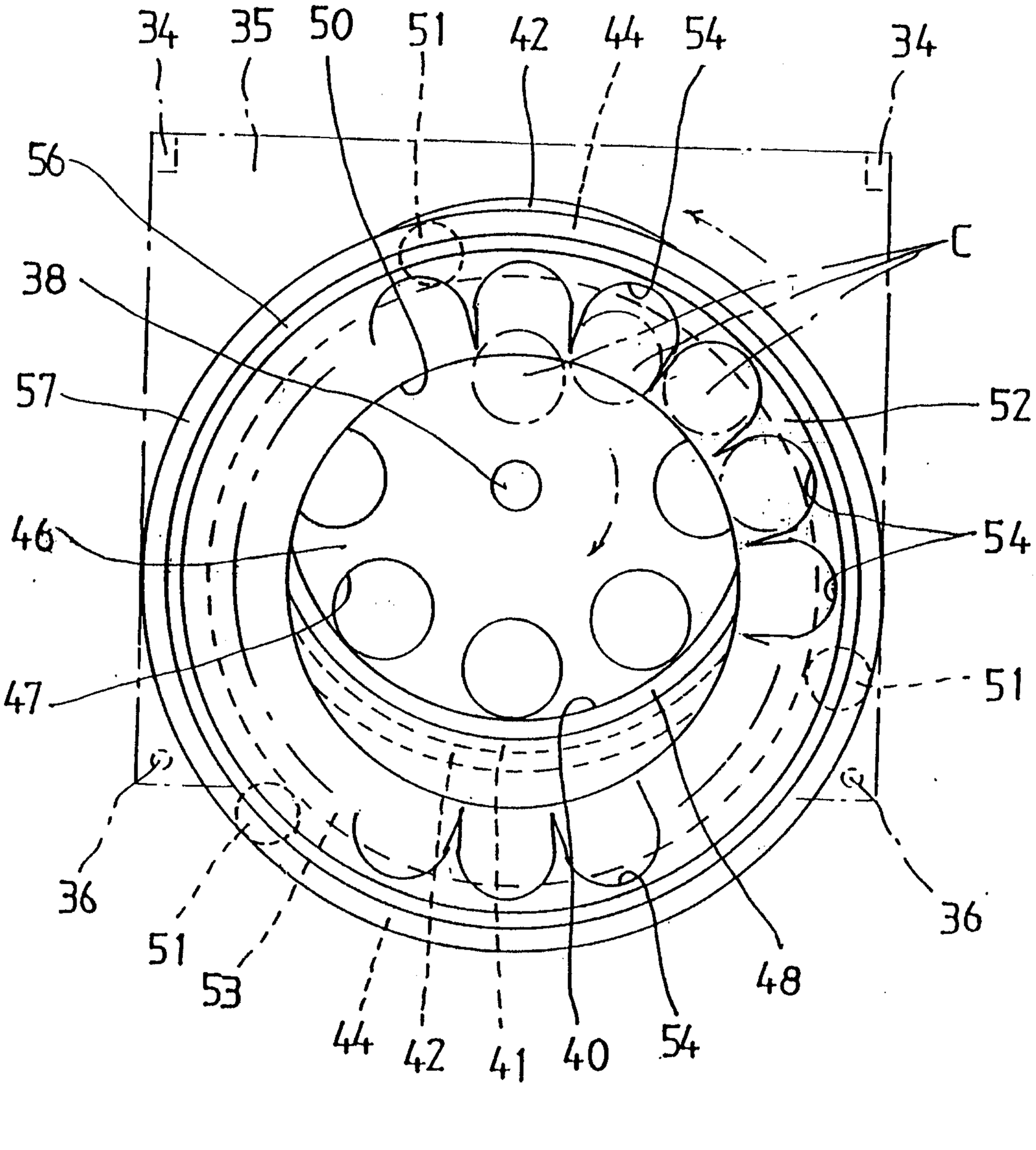
34
35
50
51
42
44
54
34
56
C
38
57
52
46
54
47
51
36
51
53
44
42
41
40
54
48
36

FIG. 3

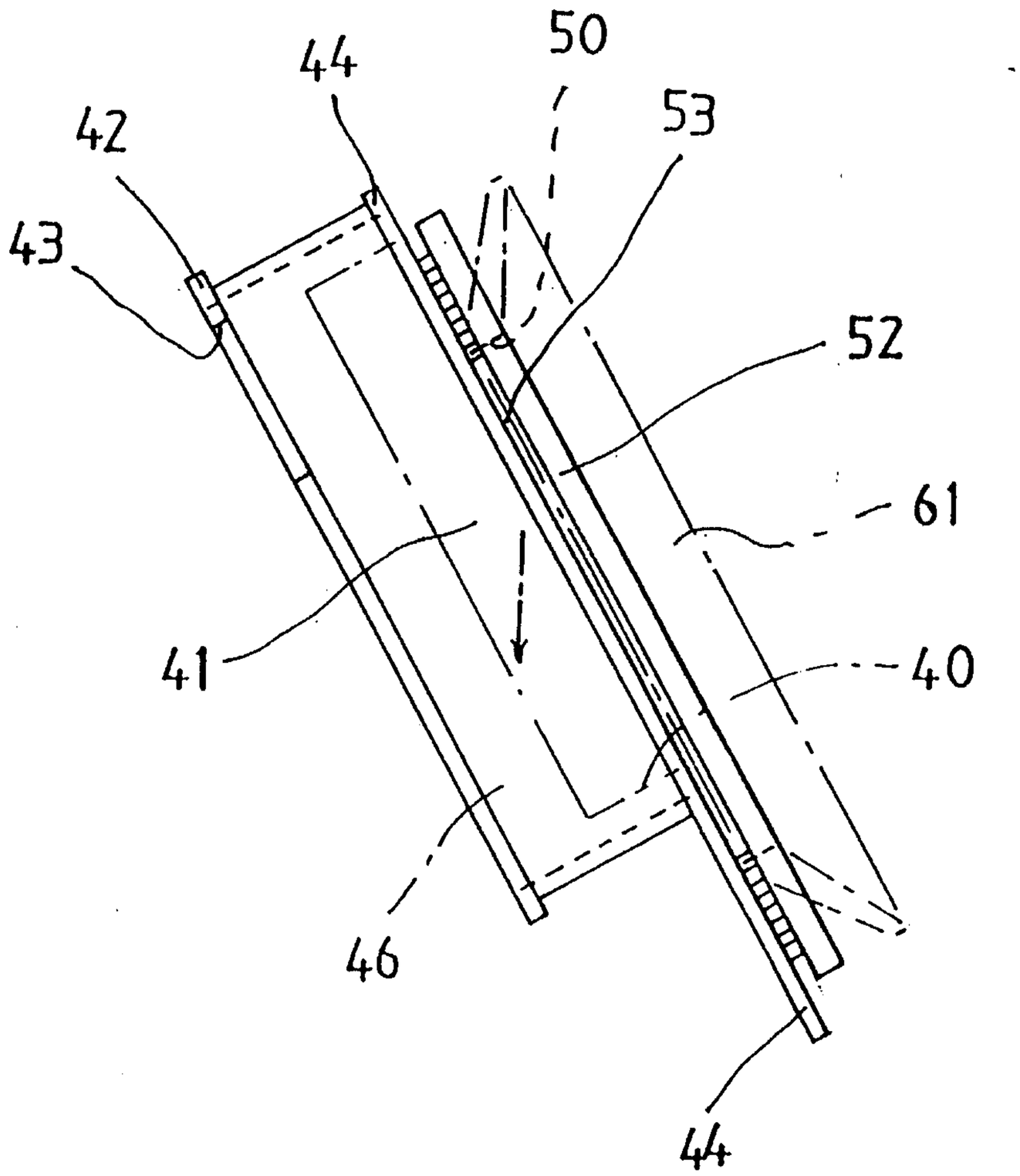

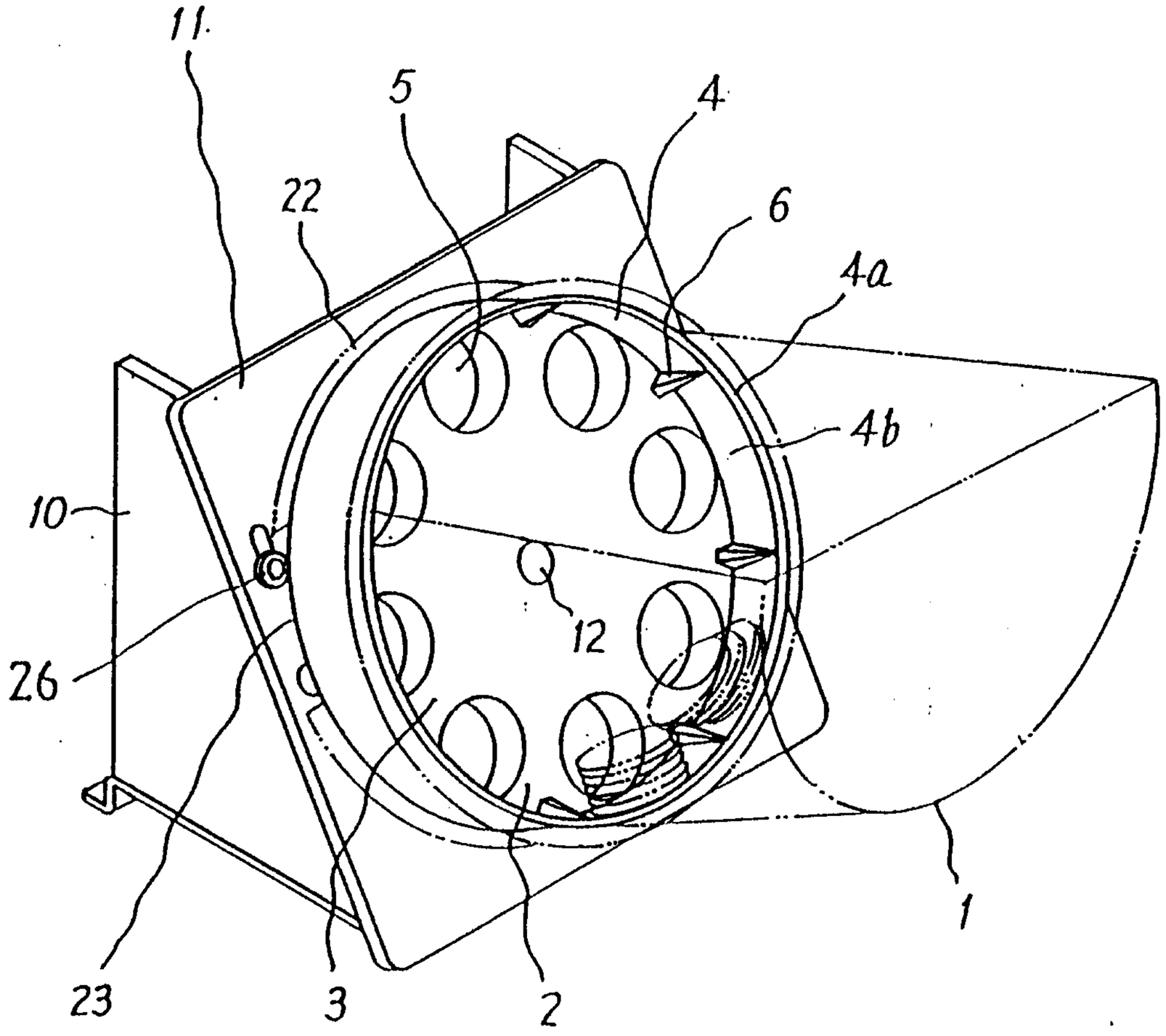

FIG. 4

FIG. 5

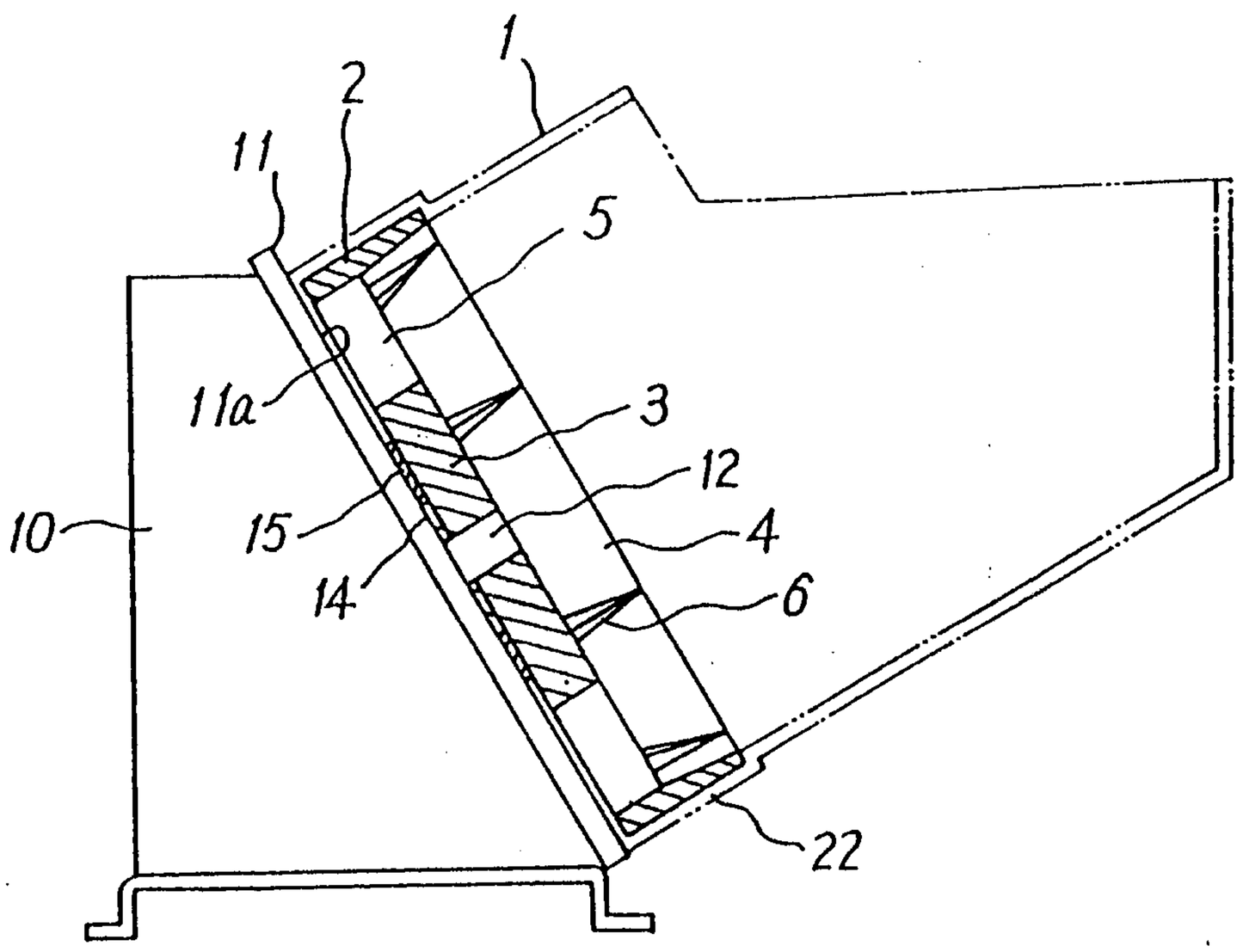

FIG. 6

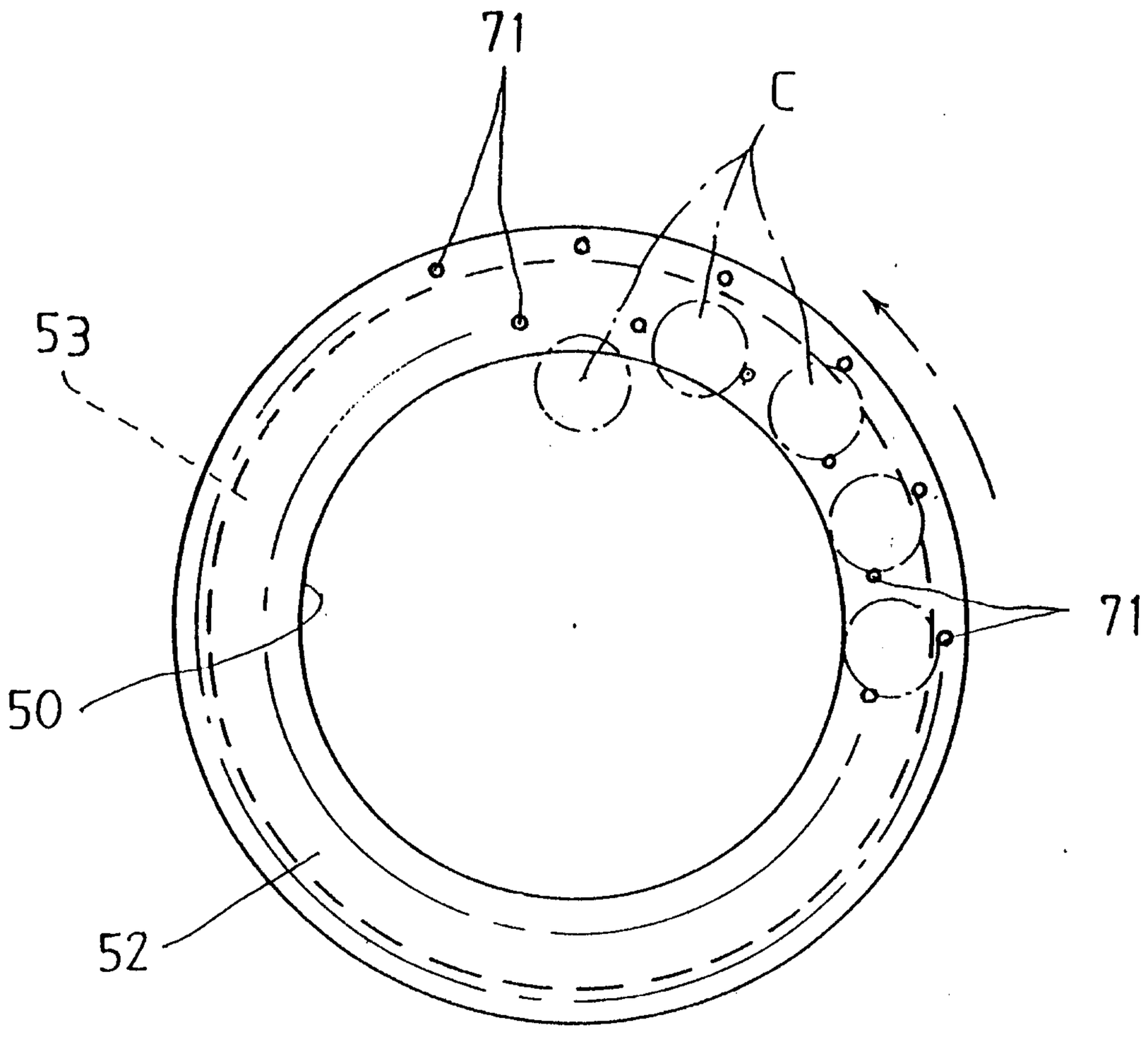

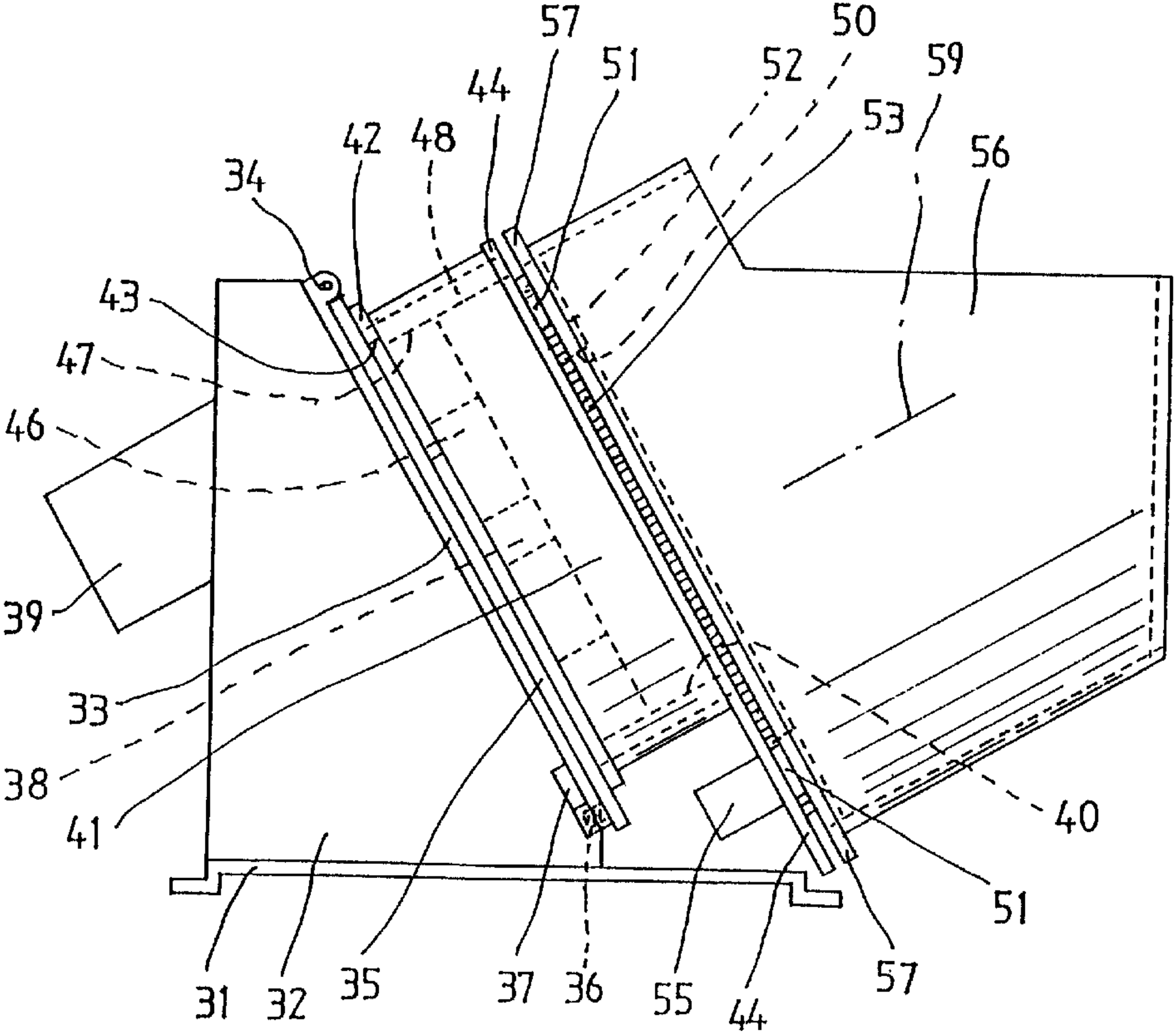
57
50
51
52
59
44
53
42
48
56
34
43
47
46
39
33
38
41
40
51
31
32
35
37
36
55
44
57