US 20140054855A1

(19) **United States**

(12) **Patent Application Publication**

(10) **Pub. No.: US 2014/0054855 A1**

(43) **Pub. Date: Feb. 27, 2014**

RAEBER

(54) **RANDOM GENERATOR FOR MANUAL USE**

(71) Applicant: **Rudolf RAEBER**, Kuessnacht am Rigi (CH)

(72) Inventor: **Rudolf RAEBER**, Kuessnacht am Rigi (CH)

(21) Appl. No.: **13/975,779**

(22) Filed: **Aug. 26, 2013**

(30) **Foreign Application Priority Data**

Aug. 27, 2012 (CH) 01493

Publication Classification

(51) **Int. Cl.**
A63F 11/00 (2006.01)

(52) **U.S. Cl.**
CPC *A63F 11/0011* (2013.01)
USPC ..... **273/144 B**

(57) **ABSTRACT**

A manually operable random generator has a housing defining an interior space. In the interior space there are at least three balls of the same spherical volume. The interior space has a volume which is greater than the total volume of all the spheres. The housing has a receiving area accessible by the balls and which has a shape and size so that the receiving of several balls is possible.

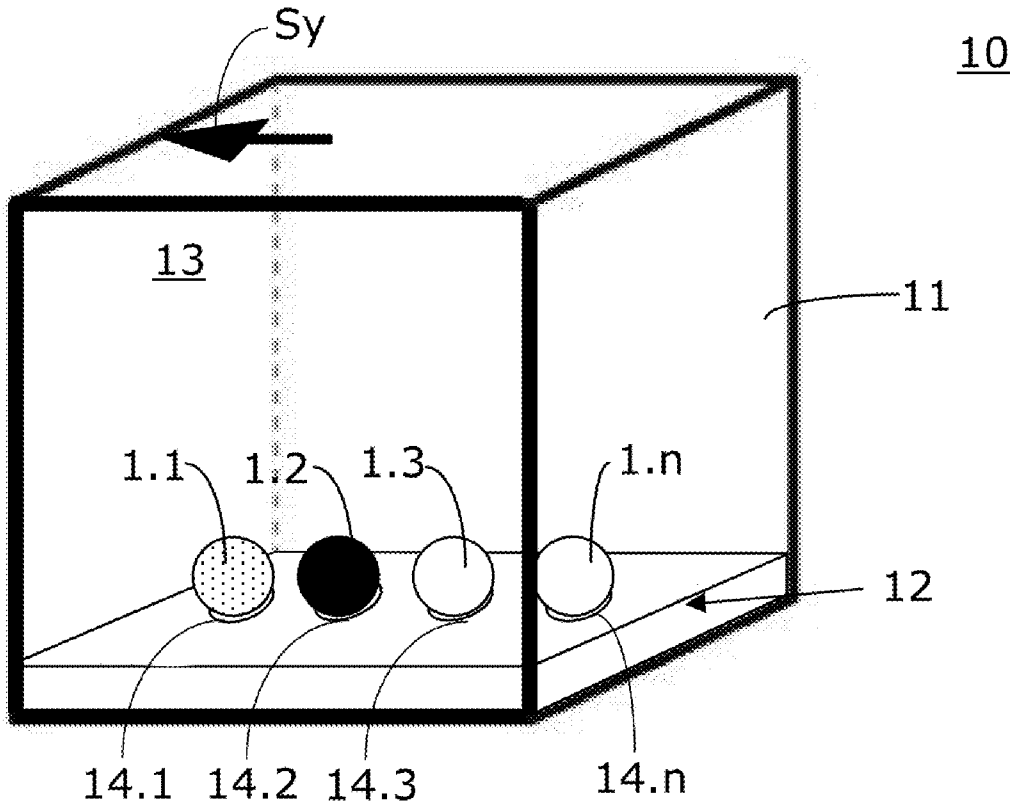

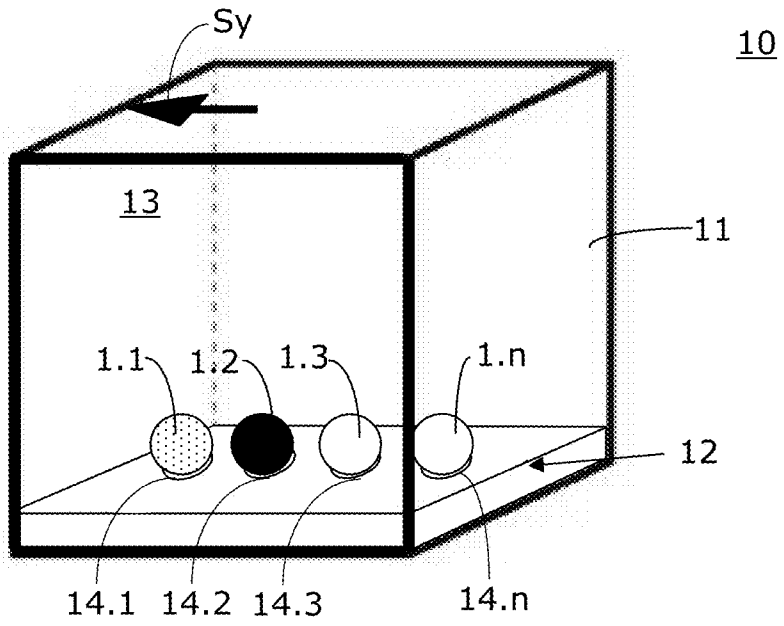
Sy
10
13
11
1.1
1.2
1.3
1.n
12
14.1
14.2
14.3
14.n

Fig. 1A

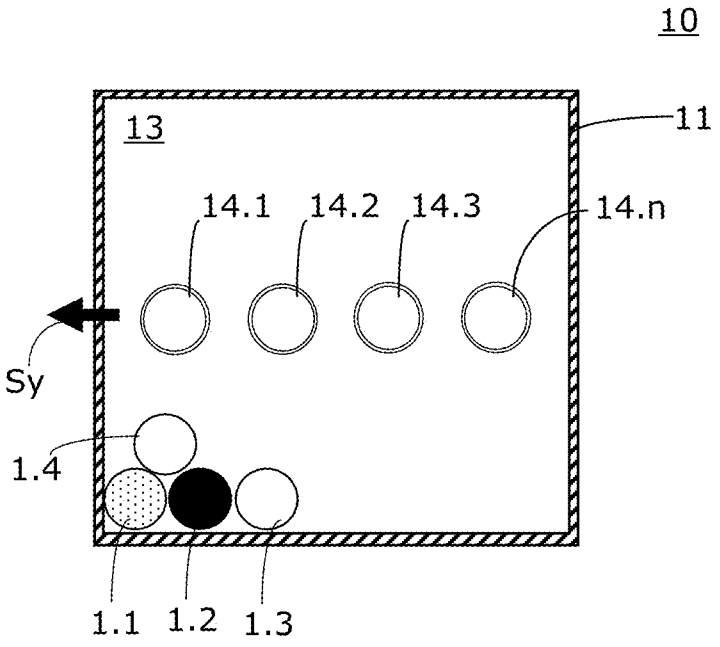
10
13
11
14.1
14.2
14.3
14.n
Sy
1.4
1.1
1.2
1.3

Fig. 1B

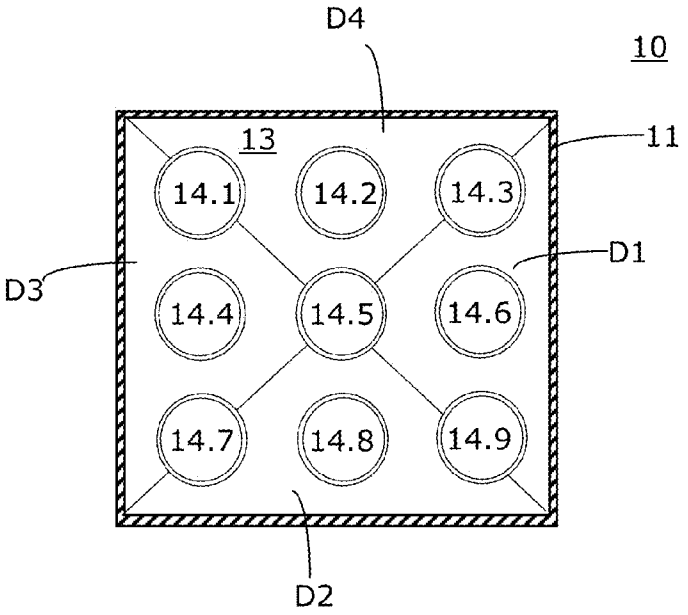
D4
10
13
11
14.1
14.2
14.3
D1
D3
14.4
14.5
14.6
14.7
14.8
14.9
D2

Fig. 2

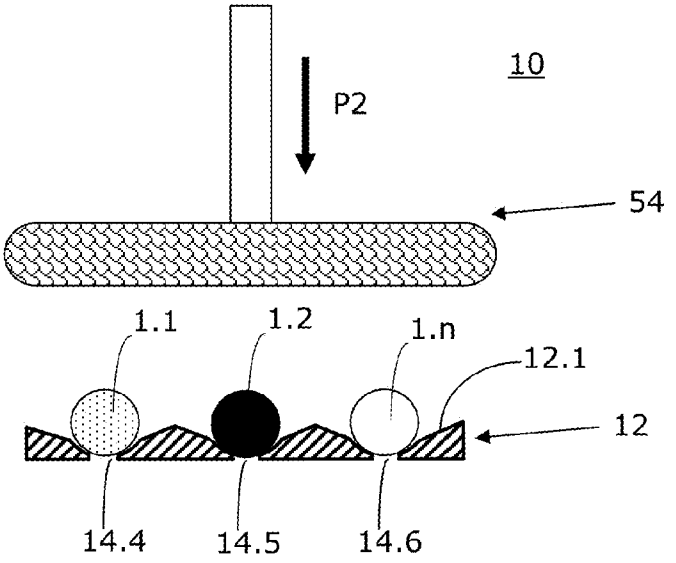
10
P2
54
1.1
1.2
1.n
12.1
12
14.4
14.5
14.6

Fig. 3

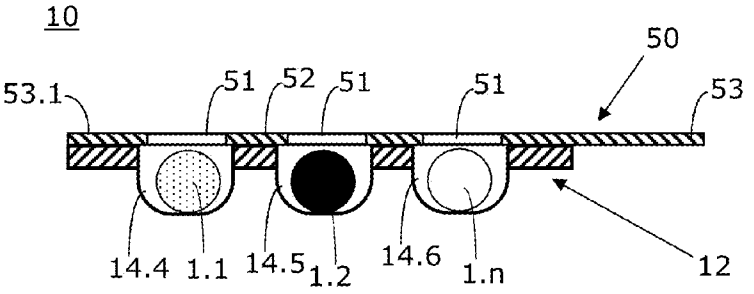

Fig. 4A

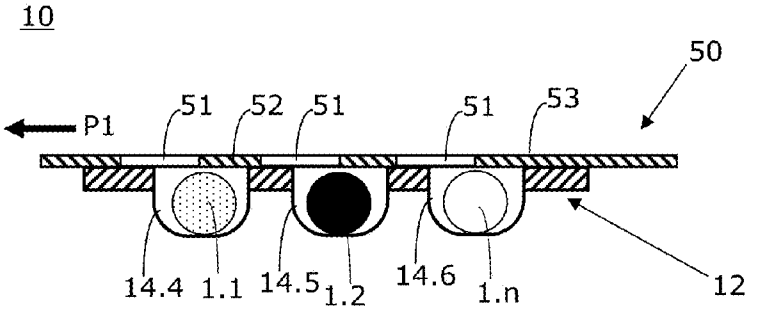

Fig. 4B

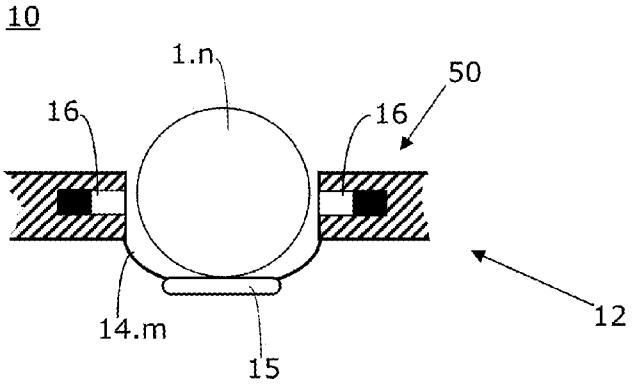

Fig. 5

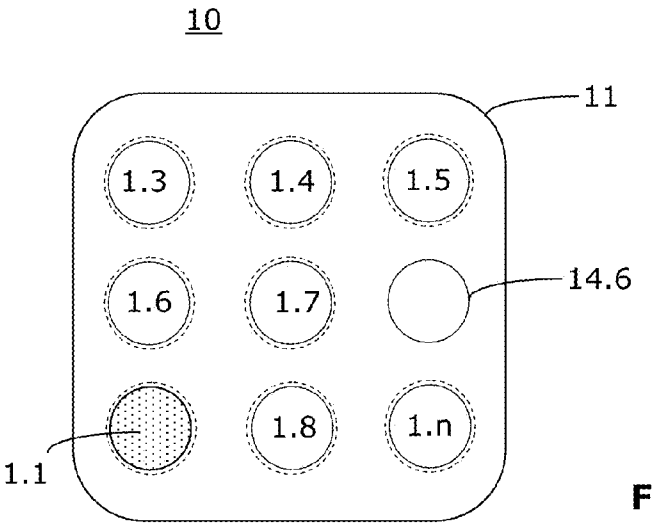

Fig. 6

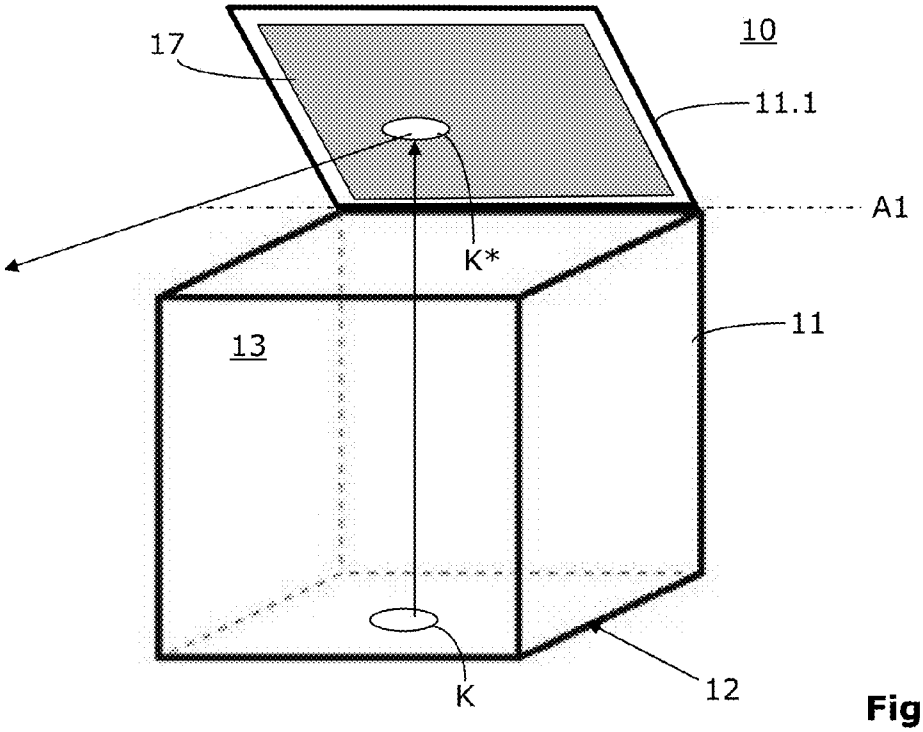

Fig. 7

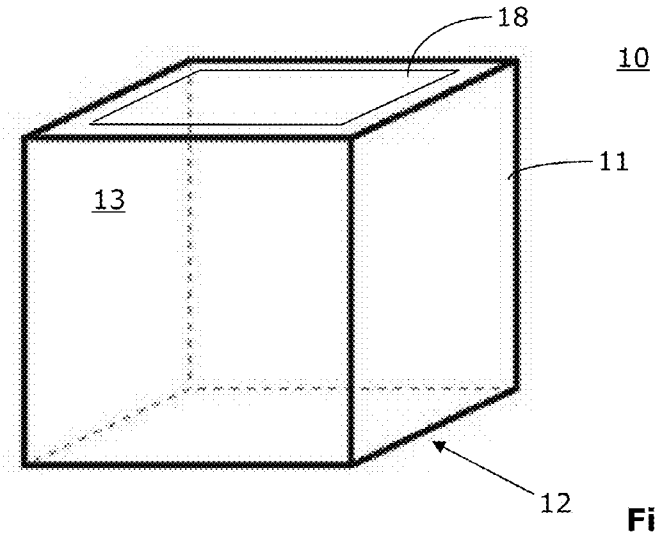

Fig. 8

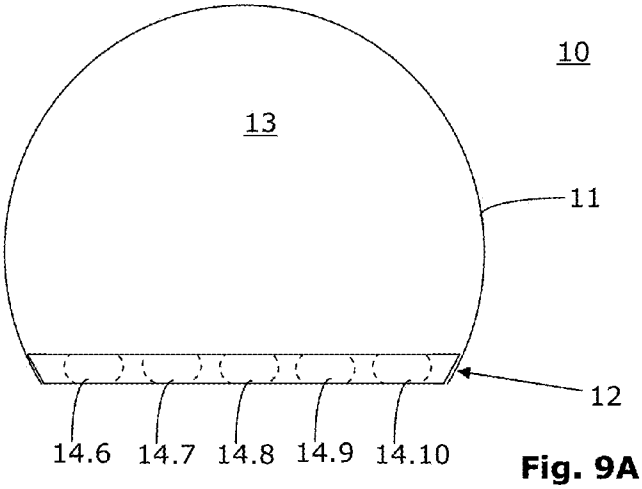

Fig. 9A

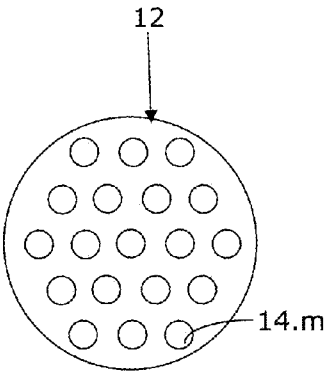

Fig. 9B

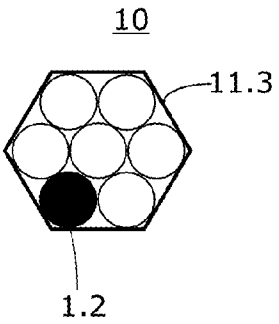

Fig. 10A

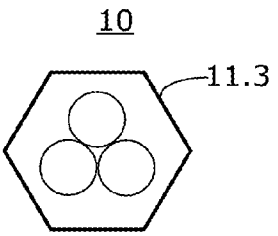

Fig. 10B

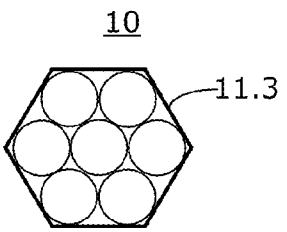

Fig. 10C

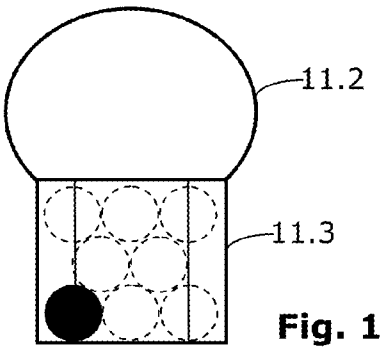

Fig. 10D

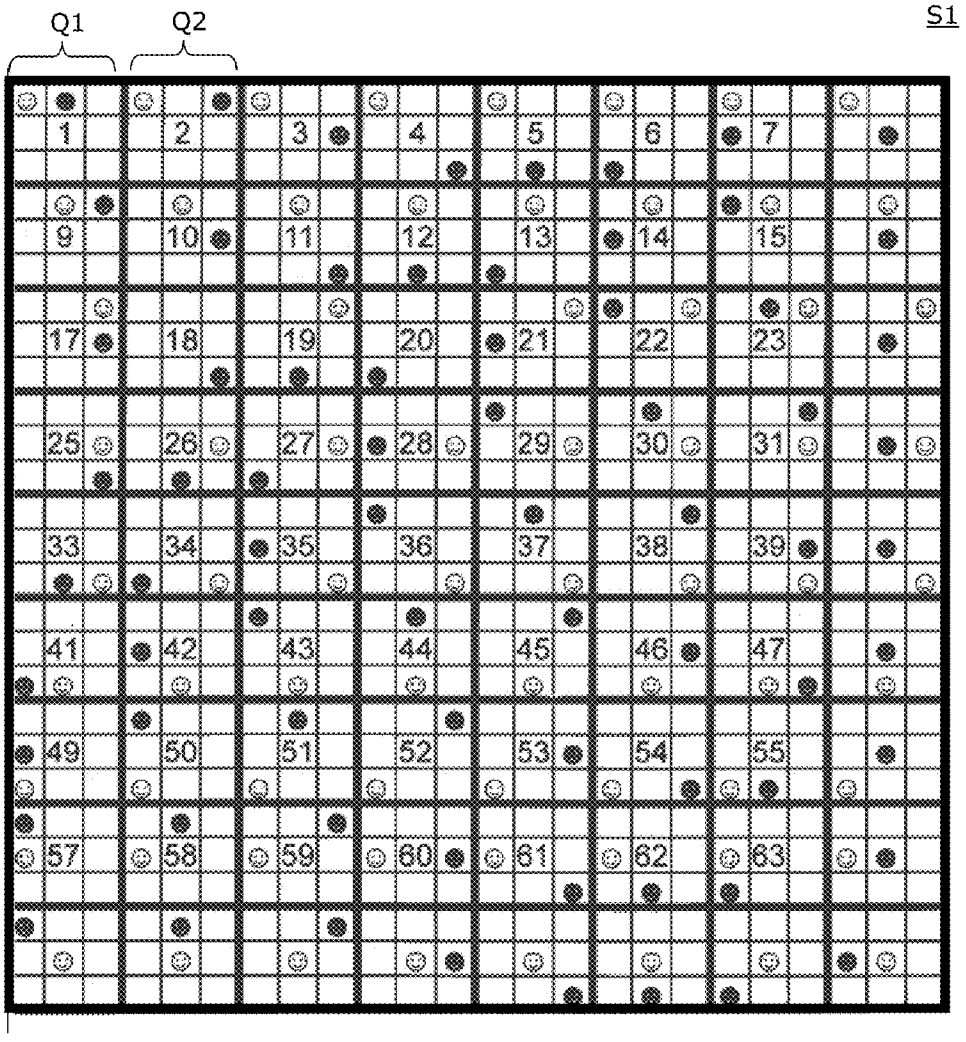

Fig. 11

RANDOM GENERATOR FOR MANUAL USE

[0001] The invention relates to a manually operable random generator.

[0002] There are numerous games whose gameplay depends on the setting of numbers or symbols determined by dice. Unfortunately, there are narrow limits as far as the options are concerned, although there are dices in different shapes and configurations.

[0003] More and more games, raffles, sports exercises and the like work with larger number spaces and possibly with additional numbers or symbols. Here one requires either the use of a number dice and a symbol dice, or one resorts to electronic or computer-based solutions.

[0004] The die principle has already been realized in other forms, such as by centrifugal dices, turntables and many more.

[0005] It is an object to provide a versatile random generator, which should be actuated manually and which covers a greater number- and/or symbol range than previous dices.

[0006] It is also the object to provide a manually operable solution, in which the "diced" result is not immediately visible to third parties.

[0007] In addition, it is an object to propose a solution that can be miniaturized and/or automated.

[0008] According to the invention a manually operable random generator, whose features are given in claim **1**, is provided.

[0009] Such a random generator is characterized in that it comprises a housing defining an interior space and in which at least three spherical bodies are enclosed which each have the same body volume. The interior space has a volume that is greater than the total volume of all bodies, so that the bodies can freely move within the interior space. The housing includes a receiving area, which is accessible from the interior space of the body and which is capable of receiving a plurality of bodies.

[0010] Preferably, "real" balls or slightly flattened balls or elongated bodies are used as spherical bodies.

[0011] Preferably, the spherical bodies are received at several predefined positions in the receiving area.

[0012] Preferably, the spherical bodies are received in the receiving area on at least two planes directly above one another, wherein the spherical bodies are close-packed in this case.

[0013] Preferably, the receiving portion comprises a plurality of receiving openings, which are accessible for the spherical bodies from the interior space and which each have a shape and size that each enables the receiving of one of the spherical bodies. Here the spherical bodies are received separately from each other in one of the receiving openings.

[0014] The random generator of the invention can have more receiving openings than spherical bodies, an equal number of receiving openings and spherical bodies or fewer receiving openings than spherical bodies.

[0015] The random generator of the invention can be designed as a microsystem (e.g. a micro-optoelectro-mechanical systems (MEMS)).

[0016] The random generator of the invention may be particularly advantageous in connection with games, raffles, lottery, sports exercises and the like.

[0017] The random generator of the invention, however, can also be used in connection with scientific experiments, involving a random selection or a random sampling. An example is the so-called Monte Carlo simulation. The random generator can also be used for randomly selecting people, such as in the context of representative surveys. The random generator of the invention is also applicable in the context of stochastic lectures and as demonstrator.

[0018] The random generator of the invention, preferably as a micro-system, may also be used in conjunction with encryption methods, for example, to improve the encryption or to make it more secure.

[0019] It is an advantage of the invention that the random generator works mechanically and thus is non-deterministic. Software-based random generators, however, always are deterministic.

[0020] Further details and advantages of the invention will be described hereinafter with reference to embodiments and with reference to the drawings.

[0021] FIG. **1**A shows a schematic, perspective transparent view of a first random generator of the invention which has the shape of a cube and which comprises four spherical bodies and four receiving openings;

[0022] FIG. **1**B shows a schematic, perspective sectional view of the first random generator of FIG. **1**A, whereby none of the four spherical bodies is in one of the four receiving openings;

[0023] FIG. **2** shows a schematic sectional view of a second random generator of the invention from above, which has the shape of a cube and which comprises nine receiving openings;

[0024] FIG. **3** shows a schematic sectional view of a third random generator of the invention (the housing is not shown), wherein the receiving section comprises a sloped upper side and three receiving openings, each being occupied by one spherical body;

[0025] FIG. **4**A shows a schematic sectional view of a fourth random generator of the invention, wherein the receiving section is provided with means designed as pusher, said fourth random generator being shown in FIG. **4**A in an open position;

[0026] FIG. **4**B shows a schematic sectional view of the fourth random generator of FIG. **4**A, wherein the pusher is in a locking position;

[0027] FIG. **5** shows a schematic sectional side view of the receiving section of a fifth random generator of the invention, wherein the receiving section is provided with magnets serving as means for holding a spherical body in a receiving opening;

[0028] FIG. **6** shows a schematic view of a sixth random generator of the invention from below, having a cube shape and comprising nine receiving openings, whereby eight of these receiving openings are occupied with spherical bodies;

[0029] FIG. **7** shows a schematic, perspective transparent view of a further random generator of the invention, having a cube shape and a swivelling cover with mirror surface;

[0030] FIG. **8** shows a schematic, perspective transparent view of a further random generator of the invention, having a cube shape and a window surface;

[0031] FIG. **9**A shows a schematic view of a further random generator of the invention, having a spherical shape, the receiving section being provided with nineteen receiving openings;

[0032] FIG. **9**B shows a schematic view of the further random generator of FIG. **9**A from below, whereby nineteen receiving openings are provided as an example;

[0033] FIG. **10**A shows a schematic sectional view of the bottom most level of the receiving section of a further random generator of the invention;

[0034] FIG. **10**B shows a schematic sectional view of the middle level of the receiving section of the random generator of FIG. **10**A;

[0035] FIG. **10**C shows a schematic sectional view of the upper most level of the receiving section of the random generator of FIG. **10**A;

[0036] FIG. **10**D shows a schematic side view of the random generator of FIGS. **10**A-**10**C, whereby the position of the spherical bodies is indicated by means of dashed circles;

[0037] FIG. **11** shows a counting scheme which can be used in connection with random generator of the invention having nine receiving openings and which is equipped with a white ball and a black ball.

[0038] It concerns mechanically functioning random generators **10**, which are equipped with multiple spherical bodies. Spherical bodies are understood to have no major or distinct contact surfaces (or layers) so that the spherical body can move freely inside the random generator **10** and can be arranged or stored in a receiving section **12** or in special receiving openings **14**.**1**-**14**.*m* (m is an integer greater or equal to 3). It is important that the bodies do not hang in the interior space **13** of the random generator **10** or hang together.

[0039] Preferably, "real" balls or slightly flattened spheres, such as for instance (elongated or flattened) spheroids are used as spherical bodies. A "real" ball according to the invention is defined by the set of all points of a space which have the same distance with respect to a fixed point. In the following "real" balls **1**.**1**-**1**.*n* (n is an integer greater than or equal to 3) are shown, but this is not intended to be limiting. Reference is made to the sphere volume, although the volume of a flattened or elongated body, strictly speaking, can not be called a spherical volume. In the introductory part and in the claims, therefore, where necessary, the expression body volume is used.

[0040] A random generator **10** of the invention is characterized in that it comprises a housing **11** defining an interior space **13** and in which at least three balls **1**.**1**-**1**.*n* of equal spherical volume VK are enclosed. The interior space **13** has a volume VI, which is greater than the total volume of all spheres (i.e. VI>n*VK), so that the balls **1**.**1**-**1**.*n* can move freely within the interior space **13**. The housing **11** comprises a receiving section **12**. In some of the embodiments (see FIGS. **1**A, **1**B, **2**, **3**, **4**A, **4**B, **5**, **6**, **9**A, **9**B) the receiving section **12** comprises several receiving openings **14**.**1**-**14**.*m*, which are accessible for the balls **11** side **1**.**1**-**1**.*n* from the inside **11** and which each have a shape and size, to allow the receiving of one of the balls **1**.**1**-**1**.*n*.

[0041] A first embodiment of the invention is shown in FIGS. **1**A and **1**B. FIG. **1**A shows a schematic, perspective transparent view of a first random generator **10** of the invention. The random generator **10** has a cubic shape and there are four balls (n=4) and four receiving openings (m=4). I.e. in this embodiment, the following applies:

n=4; m=4 and n=m

[0042] Even this simple embodiment of the invention permits—depending on equipment with balls **1**.**1**-**1**.*n*—covering different number—or symbol ranges.

[0043] The following primarily number ranges are referred to and the embodiments are related to different number ranges. However, the invention allows numerous variations by, for example, working with symbols instead of numbers, or in that a particular scheme S**1** (see e.g. FIG. **11**) defines a basis.

[0044] If the first embodiment of the invention is equipped with a single ball **1**.**1**, then:

n=1; m=4 and n<m

[0045] In this case, exactly four different positions are possible, which can be taken by the ball **1**.**1**. Thus, there are four possibilities, as illustrated by the following simplified table (the white circles represent the position of the ball **1**.**1** in the respective receiving opening **14**.**1**-**14**.**4**, designated on the right hand side). Such an embodiment may thus replace a conventional pyramidal 4-sided dice.

TABLE 1

Possibilities	1	2	3	4	Receiving openings
	○				14.1
		○			14.2
			○		14.3
				○	14.4

[0046] If the first embodiment of the invention is equipped with two identical balls **1**.**3**, **1**.**4**, then:

n=2; m=4 and n<m

[0047] In this case, there are six possibilities, as illustrated by the following simplified table 2 (the white circles represent the positions of the balls **1**.**3** and **1**.**4** in the receiving openings **14**.**1**-**14**.**4**, designated on the right hand side). Such an embodiment may thus replace a conventional dice with six sides.

TABLE 2

Possibilities	1	2	3	4	5	6	Receiving openings
	○	○	○				14.1
	○			○	○		14.2
		○		○		○	14.3
			○		○	○	14.4

[0048] In most embodiments of the invention, a defined orientation of the visible ball field is important in order to be able to assign unique numbers and/or symbols.

[0049] A unique orientation can be set in all the embodiments by means of a label or a symbol (Sy) on the housing **11** of the random generator **10**. But one can also agree that for instance the side of the visible ball field is deemed the top side where one of the balls (e.g. the black sphere **1**.**2**, if one is used) is in the uppermost position.

[0050] In the FIGS. **1**A and **1**B, an arrow Sy is placed as a symbol on the top of the housing **11**, so as to determine the orientation.

[0051] By way of another example, which is specifically shown in FIGS. **1**A and **1**B, the flexibility of the first embodiment of the invention will be shown. When the first embodiment of the invention is equipped with two identical white balls **1**.**3** and **1**.**4**, a grey ball **1**.**1** and a black ball **1**.**2**, then:

n=4; m=4 and n=m.

[0052] In this case, twelve opportunities arise, as illustrated by the following simplified table 3 (the different circles represent the positions of the balls **1**.**1**-**1**.**4** in the receiving openings **14**.**1**-**14**.**4**, designated on the right hand side).

TABLE 3

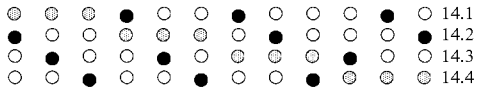

Possibilities	1	2	3	4	5	6	7	8	9	10	11	12	Receiving openings

[0053] In the situation shown in FIG. **1**A, the balls **1.1**-**1.4** sit in the receiving openings **14.1**-**14.4** in the constellation, which is referred to in the above table 3 as possibility **1**. In the situation shown in FIG. **1**B, none of the balls **1.1**-**1.4** sits in a receiving opening **14.1**-**14.4**. By manually agitating the random generator **10**, the balls **1.1**-**1.4** can be mixed and brought into the receiving openings **14.1**-**14.4**.

[0054] Preferably, the mixing in all embodiments is done so that the balls **1.1**-**1.***n* cannot be seen, to prevent manipulation. Therefore, the housing **11** in all embodiments is preferably opaque or only partially transparent (for instance in a window area **18** (see FIG. **8**) or in the area of the receiving openings (see FIG. **5**).

[0055] Referring now to FIG. **2** a second embodiment of the invention is described. FIG. **2** shows a schematic sectional view of the second random generator **10** of the invention from the top. This embodiment of the random generator **10** has a cubic shape, too. It now has m=9 receiving openings **14.1**- to **14.9**. In FIG. **2** one looks from above into the interior space **13** of the housing **11**, and may see the receiving area **12** with the m=9 receiving openings **14.1**-**14.9**. To prevent that there are "dead spots" in the receiving area **12**, in which a ball may set, the receiving area **12** is preferably sloped. In FIG. **2**, the receiving area **12**, for example, consists of four triangular segments D**1**-D**4**, which define in the area of the common contact point (located here in the middle) a low point. The low point here is exactly centred underneath the receptacle opening **14.5**.

[0056] If the second embodiment of the invention is equipped with a single ball **1.1**, then:

n=1; m=9 and n<m

[0057] In this case, exactly nine different positions are possible which can take the ball **1.1**. Thus, there are nine possibilities.

[0058] If the second embodiment of the invention is equipped with a white ball **1.3** and a black ball **1.2**, then:

n=2; m=9 and n<m

[0059] In this case, there are at least 9*8=72 possibilities. A scheme S**1** is shown in FIG. **11** where by means of a special assignment the numbers 1 to 64 are allocated to the different images (constellations of spheres), which may arise. Further possible pictures, which are assigned no numbers here, can be allocated special functions (Joker fields, fields of action, etc.).

[0060] The random generator **10** of FIG. **2** is as flexible if it is equipped with a grey ball **1.1**, a black ball **1.2** and seven neutral balls (eg white). The neutral (eg white) balls then take in the example described in the last paragraph the blanks positions. I.e., this embodiment has no empty receiving openings **14.1**-**14.***m*, but neutral (eg white) balls that serve as placeholders.

[0061] The random generator **10** of FIG. **2** is much more flexible if it is equipped with a black ball, a white ball, three red balls and four green balls (i.e. n=m=9). Such a random generator **10** offers **3168** possibilities.

[0062] FIG. **3** shows a schematic sectional side view of a portion of a third random generator **10** of the invention, wherein the receiving region **12** comprises a structured top side **12.1** and three receiving openings **14.4**, **14.5**, **14.6**, which actually all are occupied with one ball **1.1**, **1.2**, **1.***n*. The structured top side **12.1** has inclined surfaces which are each so arranged and inclined that the balls **1.1**, **1.2**, **1.***n* necessarily roll into the receiving openings **14.4**, **14.5**, **14.6**. In order to ensure after shaking or moving the random generator **10** that the balls **1.1**, **1.2**, **1.***n* are located in the receiving openings **14.4**, **14.5**, **14.6**, the housing **11** (not shown) of the random generator **10** may be equipped with a plunger **54**, which holds the balls **1.1**-**1.***n* after a displacement movement P**2** in the receiving openings **14.4**, **14.5**, **14.6**. The plunger **54** can be moved manually up or down, for example, from outside of the housing **11**. When it is moved downward, the balls are **1.1**-**1.***n* trapped or clamped and one can for example turn the random generator **10** to see which balls **1.1**-**1.***n* are in which receiving openings **14.4**, **14.5**, **14.6**.

[0063] FIG. **4**A shows a schematic sectional side view of a portion of a fourth random generator **10** of the invention, wherein the receiving portion **12** is provided with means **50** in form of a slide **53**. The slider **53** is in an open position in FIG. **4**A. In this open position, a ball **1.1**, **1.2**, **1.***n* might access one of the receiving openings **14.4**, **14.5**, **14.6** because the slider **53** is provided with through holes **51** of a corresponding size. Preferably, the top 53.1 of the slider **53** is structured in all embodiments (such as the upper surface **12.1** of the receiving area **12** in FIG. **3**), that the balls **1.1**, **1.2**, **1.***n* necessarily roll in the receiving openings **14.4**, **14.5**, **14.6**. By moving the slider **53** (as indicated by the arrow P**1**), the slider **53** can be transferred to a locking position. FIG. **4**B is a schematic sectional side view of the fourth random generator **10** of FIG. **4**A, wherein the slider **53** is in the locking position. In the locking position, the balls are **1.1**-**1.***n* caught or stuck, and one can for example turn the random generator **10** to see which balls **1.1**-**1.***n* are in which receiving openings **14.4**, **14.5**, **14.6**.

[0064] FIG. **5** shows a schematic sectional side view of a receiving portion **12** of a fifth random generator **10** of the invention, wherein the receiving port **14.***m* is provided with means **50** in the form of magnets **16**, in order to hold a ball **1.***n* in the receiving opening **14**. If permanent magnets **16** are used here, then the balls **1.***n* should be metallic and the magnetic field strength should be chosen so that the balls come off from its locked position when the random generator **10** ss shaken or tapped on a table. However, embodiments are possible in which the magnetic effect is caused by the movement or displacement of an element of the housing **11**.

[0065] Preferably, the receiving openings are **14.1**-**14.***m* designed in all embodiments so that one can see from the bottom, which balls **1.1**-**1.***n* are in which receiving openings **14.1**- are **14.***m*. The receiving openings **14.1**-**14.***m* can therefore, in all embodiments comprise windows, view holes or regions or lenses. The receiving openings **14.1**-**14.***m* may also be surrounded by a transparent material in all embodiments.

In FIG. **5** is indicated by way of example, that the receiving opening **14**.*m* is provided with a window **15**.

[0066] A schematic view of a sixth random generator **10** of the invention is shown in FIG. **6** from below, which has a cubic shape and nine receiving openings **14**.**1**-**14**.*m* (with m=9), with eight of the receving openings **14**.**1**-**14**.*m* being occupied with balls **1**.**1**-**1**.*n* in the moment shown. The holes of the receiving openings **14**.**1**-**14**.*m* have a diameter which is slightly smaller than the maximum diameter of the balls **1**.**1**-**1**.*n*. The diameter of the balls **1**.**1**-**1**.*n* is shown in FIG. **6** by dashed circles. The receiving opening **14**.**6** was deliberately shown for clarity empty (eg the corresponding ball is still in the interior space **13** of the housing **11**). Due to the fact that the receiving openings **14**.**1**-**14**.*m* have a diameter which is slightly smaller than the maximum diameter of the balls **1**.**1**-**1**.*n*, the balls **1**.**1**-**1**.*n* do not fall out of the housing **11**. The balls **1**.**1**-**1**.*n* are however almost completely visible if one looks at the random generator **10** from the bottom.

[0067] FIG. **7** shows a schematic perspective transparent view of a further random generator **10** of the invention having a cube-shaped and including a hinged cover **11**.**1** with a mirror surface **17**. In FIG. **7** is indicated in purely schematic form that by looking at the mirror surface **17** a ball (shown here as a circle K in the receiving area **12**) is visible from the outside. The reflection of the circle K is denoted here by K*. In order to be able to open the cover **11**.**1**, a pivot axis A**1** is provided on the housing **11** in the region of an edge, as indicated schematically in FIG. **7**. So that the lid **11**.**1** remains closed during shaking of the random generator **10**, a mechanical or a magnetic closure may be provided (not shown).

[0068] FIG. **8** is a schematic, perspective transparent view of another random generator **10** of the invention, which has a cubic shape and which includes a window panel **18**. Also here the receiving area **12** is at the bottom of the cube-shaped housing **11**. In order to be able to see the balls **1**.**1**-**1**.*n*, the said window panel **18** is mounted on the top of the housing **11**. From above, one can see into the interior space **13** and can recognize the arrangement of the balls **1**.**1**-**1**.*n* in the receiving area **12**.

[0069] It is obvious that the housing **11** can also have any other shape. It is only important that the receiving area **12** is substantially flat so that the balls **1**.**1**-**1**.*n* can rearrange easily in the receiving openings **14**.**1**-**14**.*m*. It is also important that there are no areas in the interior space **13**, in which the balls **1**.**1**-**1**.*n* can be stuck.

[0070] Particularly preferred is an embodiment of FIG. **9**A. FIG. **9**A shows a schematic sectional view of a further random generator **10** of the invention, which has a (partial) spherical shape and its receiving area **12**, shown in section, comprises five receiving openings **14**.**1**-**14**.**5**. In practice, this random generator **10** may have nineteen receiving openings **14**.**1**-**14**.*m*, as shown in FIG. **9**B.

[0071] A further embodiment of a random generator **10** of the invention is shown in FIGS. **10**A to **10**D. FIG. **10**D is a schematic side view, where the balls **1**.**1**-**1**.*n* (with n=17) are arranged in three overlapping layers. FIG. **10**A shows a sectional view through the lower portion **11**.**3** of the housing **11** together with seven balls contained therein. FIG. **10**B shows a sectional view through the middle layer with three balls, and FIG. **10**C shows a sectional view through the upper layer with seven balls. The housing **11** is hexagonally shaped in the lower housing portion **11**.**3** and has a dimension such that the balls are arranged in a close packing (close together) at three levels.

[0072] In order to be able to open up a number or symbol space, at least one of the n=17 balls must be different from the other balls. Here a black ball **1**.**2** is used, which is at the bottom left of the bottom layer in the example shown. This constellation could for example be assigned the number 6.

[0073] This embodiment allows to create the following constellation of a random generator **10** with seventeen different possibilities, if the random generator **10** is fitted with a black ball **1**.**2** and **16** neutral balls:

n=17; m=17 with n=m

[0074] The embodiment of FIG. **10** can also be modified so that the lower housing area **11**.**3** is square shaped rather than hexagonal, and that in the lower layer four balls, one ball above this and again four balls can lie on top.

[0075] FIG. **11** shows an exemplary counting scheme S**1** that can be used in conjunction with a random generator **10** of the invention, which comprises the nine receiving openings **14**.**1**-**14**.*m* (m=9) and which is fitted with a white ball and a black ball. In the illustrated counting scheme S**1**, the position of the white ball is represented by by a white "smiley" and the position of the black ball a black "smiley". The other fields of the counting scheme S, or the corresponding receiving openings **14**.**1**-**14**.*m* may either be empty (if only the white ball and the black ball are used, i.e., when the following applies: n=2), or neutral balls may be in these positions (in this case: m=n=9).

[0076] If now, after the shaking of the random generator **10**, the white ball is in the junction box of the first column and the first row and the black ball is in the junction box of the second column and the first row, the constellation shown in the first quadrant Q**1** top left of the counting scheme S**1** results. This configuration may be associated with, for example, the number "1". If the two balls are in the second quadrant Q**2**, the number "2" was "rolled", etc.

[0077] By increasing the number of balls and/or by the use of balls, which are different from each other, the number of possibilities may be significantly increased. Calculations have shown that for example more than 400,000 options can easily be achieved with a suitably populated random generator **10** of FIG. **2**, if one uses n=9 balls, which all differ from each other (by color, finish, marking, labelling, or the like).

[0078] It is an advantage of the invention that the random generator **10** operates mechanically and is therefore non-deterministic. Software-based random generators, however, are always deterministic. Therefore, one uses in the context of software-based random number generators also mechanical processes to make the random numbers determined by software non-deterministic. The present invention allows a combination, if the random generator **10** is equipped with sensors, in order to automatically detect the position of the balls or the pattern formed by scanning the balls. The sampled or detected result can be transferred to a computer, there to affect the random generation, or to serve as a random result. The reading of the position of the balls or of the pattern is preferably carried out opto-electrically or magneto-electrically in connection with the respective embodiments. Also possible is the use of a CCD chip (Charge-coupled device), in order to "read" the position of the balls or the pattern and passed it on to a computer.

[0079] Embodiments of the invention also are possible in which the random generator **10** is a micro-system (that is a miniaturized device), the components of which have smallest dimensions (in the micron range), and which interact as a system as described herein. If such a system is equipped with

small micro electro-optical sensors or a CCD chip, one gets a micro-system, which can be referred to as micro-opto-electro-mechanical system (MEMS).

[0080] Such a microsystem can for example serve as a hardware random generator that generates real, non-deterministic random numbers. Preferably, such micro-system is carried out in silicon technology.

[0081] Preferably, such micro-systems of the invention are integrated into the appropriate hardware (e.g., in a network router or switch). Moving the random generator **10** configured as a microsystem may then be done manually or through the use of an excitation body (vibration member) and actuator (for example, piezo-based).

[0082] Random generators **10** implemented as microsystems with integrated excitation body (vibration member) or actuator (e.g. piezo-based) are completely self-sufficient, i.e. they do not need any manual handling.

[0083] Computers, smart phones, tablet computers, communications hardware, and other equipment can be fitted in the future with random generators **10** of the invention implemented as microsystems.

REFERENCE NUMBERS

[0084]

Spherical bodies or balls	1.1-1.n
Random generator	10
housing	11
cover	11.1
Upper region oft he housing	11.2
Lower region oft he housing	11.3
receiving section	12
Structured surface	12.1
Interior space	13
Receiving openings	14.1-14.m
window	15
magnet	16
Mirror (surface)	17
window	18
means	50
holes	51
ridge	52
slider	53
top	53.1
pivot axis	A1
Triangular segments	D1, D2, D3, D4
weight	GK
circle	K
reflection	K*
Number of balls	n
Number of receiving openings	m
movement	P1
movement	P2
first quadrant	Q1
second quadrant	Q2
Scheme	S1
Marking, symbol	Sy
Volume of the interior space	VI
Volume of the bodies or balls	VK

1. Manually operable random generator (**10**), characterized in that

it comprises a housing (**11**, **11.2**, **11.3**), which defines an interior space (**13**),

it comprises at least three spherical bodies (**1.1-1.***n*) of the same body volume (CV) being located in the interior space (**13**), wherein the interior space (**13**) has a volume (VI), which is larger than the total volume (GV) of all spherical bodies (**1.1-1.***n*), and

that the housing (**11**, **11.2**, **11.3**) has a receiving area (**12**, **11.3**), which is accessible by the spherical bodies (**1.1-1.***n*) from the interior space (**13**), and which has a shape and size enabling the receiving of a plurality of spherical bodies (**1.1-1.***n*).

2. Random generator (**10**) according to claim **1**, characterized in that in the receiving area (**12**) a plurality of receiving openings (**14.1-14.***m*) are disposed, wherein the receiving openings (**14.1-14.***m*) are accessible from the interior (**13**) for the spherical bodies (**1.1-1.***n*) and each of the receiving openings (**14.1-14.***m*) having a shape and size so that each receiving opening (**14.1-14.***m*) is able to receive one of the spherical bodies (**1.1-1.***n*).

3. Random generator (**10**) according to claim **1**, characterized in that at least one of the spherical bodies (**1.1**) is designed so that it is visably and/or tangibly (by touch) different from the other spherical bodies.

4. Random generator (**10**) according to claim **1**, characterized in that at least two of the spherical bodies (**1.1**) are designed optically and/or tangibly different.

5. Random generator (**10**) of claim **1**, characterized in that the following relation holds: the number n of the spherical bodies (**1.1-1.***n*) equals the number m of the receiving openings (**14.1-14.***m*).

6. Random generator (**10**) of claim **1**, characterized in that it comprises six or nine spherical bodies (**1.1-1.***n*) of equal body volume (VK) and of equal weight (GK) and six or nine receiving openings (**14.1-14.***m*).

7. Random generator (**10**) of claim **1**, characterized in that the following relation holds: the number n of the spherical bodies (**1.1-1.***n*) equals the number m of the receiving openings (**14.1-14.***m*) minus 1.

8. Random generator (**10**) of claim **1**, characterized in that in the area of the receiving openings (**14.1-14.***m*) there are means (**50**) for temporarily holding the spherical bodies (**1.1-1.***n*) in the receiving openings (**14.1-14.***m*).

9. Random generator (**10**) of claim **1**, characterized in that the housing (**11**; **11.2**, **11.3**) is designed so that the spherical bodies (**1.1-1.***n*) are visible as soon as they are in the receiving section (**12**) or in the receiving openings (**14.1-14.***m*).

10. Random generator (**10**) of claim **9**, characterized in that the spherical bodies (**1.1-1.***n*) are visible through the interior space (**13**) and where for this purpose preferably the housing (**11**; **11.2**, **11.3**) is provided with an opening or window (**18**), or where the housing (**11**; **11.2**, **11.3**) is at least partially transparent.

11. Random generator (**10**) of claim **9**, characterized in that the spherical bodies (**1.1-1.***n*) are visible from outside of the housing (**11**; **11.2**, **11.3**).

12. Random generator (**10**) of claim **8**, characterized in that the means (**50**) comprise a slide (**53**) which, after having performed a repositioning movement (P1), holds the spherical bodies (**1.1-1.***n*) in the receiving openings (**14.1-14.***m*).

13. Random generator (**10**) of claim **8**, characterized in that the means (**50**) comprise magnets (**16**) which are position in the area of the receiving openings (**14.1-14.***m*) in order to hold the spherical bodies (**1.1-1.***n*) in the receiving openings (**14.1-14.***m*).

14. Random generator (**10**) of claim **8**, characterized in that the means (**50**) comprise a plunger (**54**) which, after having performed a repositioning movement (P1), holds the spherical bodies (**1.1-1.***n*) in the receiving openings (**14.1-14.***m*).

15. Random generator (**10**) of claim **8**, characterized in that the housing (**11**; **11.2**, **11.3**) comprises an upper part (**11.2**) and a lower part (**11.3**) which together enclose the interior space (**13**) whereby the lower part (**11.3**) serves as receiving area (**12**; **11.3**) for several spherical bodies (**1.1**-**1.***n*) in at least two layers on top of each other.

16. Random generator (**10**) according to claim **1**, characterized in that the random generator (**10**) is implemented as micro system, preferably in silicon technology.

17. Random generator (**10**) of claim **16**, characterized in that it is devised for integration into a computer, a smart phone, a tablet PC, or into communication hardware.

* * * * *