(12) INTERNATIONAL APPLICATION PUBLISHED UNDER THE PATENT COOPERATION TREATY (PCT)

(19) World Intellectual Property Organization
International Bureau

(43) International Publication Date
06 December 2018 (06.12.2018)

WIPO | PCT

(10) International Publication Number
WO 2018/222197 A1

(51) International Patent Classification:
E21B 41/00 (2006.01) *H02J 50/00* (2016.01)
E21B 47/12 (2006.01)

(21) International Application Number:
PCT/US2017/035495

(22) International Filing Date:
01 June 2017 (01.06.2017)

(25) Filing Language: English

(26) Publication Language: English

(71) Applicant: **HALLIBURTON ENERGY SERVICES, INC.** [US/US]; 3000 N. Sam Houston Parkway E., Houston, Texas 77032 (US).

(72) Inventors: **STEELE, David Joe**; 3402 Sheridan Court, Arlington, Texas 76017 (US). **GODAGER, Oivind**; Asnesasen 17, Vestfold, NO-3222 Sandefjord (NO). **ZHONG, Xiaoguang Allan**; 3625 Neiman Road, Plano, Texas 75025 (US).

(74) Agent: **TIDWELL, Mark** et al.; Haynes and Boone, LLP, 2323 Victory Avenue, Suite 700, Dallas, Texas 75219 (US).

(81) Designated States *(unless otherwise indicated, for every kind of national protection available)*: AE, AG, AL, AM, AO, AT, AU, AZ, BA, BB, BG, BH, BN, BR, BW, BY, BZ, CA, CH, CL, CN, CO, CR, CU, CZ, DE, DJ, DK, DM, DO, DZ, EC, EE, EG, ES, FI, GB, GD, GE, GH, GM, GT, HN, HR, HU, ID, IL, IN, IR, IS, JP, KE, KG, KH, KN, KP, KR, KW, KZ, LA, LC, LK, LR, LS, LU, LY, MA, MD, ME, MG, MK, MN, MW, MX, MY, MZ, NA, NG, NI, NO, NZ, OM, PA, PE, PG, PH, PL, PT, QA, RO, RS, RU, RW, SA, SC, SD, SE, SG, SK, SL, SM, ST, SV, SY, TH, TJ, TM, TN, TR, TT, TZ, UA, UG, US, UZ, VC, VN, ZA, ZM, ZW.

(84) Designated States *(unless otherwise indicated, for every kind of regional protection available)*: ARIPO (BW, GH, GM, KE, LR, LS, MW, MZ, NA, RW, SD, SL, ST, SZ, TZ, UG, ZM, ZW), Eurasian (AM, AZ, BY, KG, KZ, RU, TJ, TM), European (AL, AT, BE, BG, CH, CY, CZ, DE, DK, EE, ES, FI, FR, GB, GR, HR, HU, IE, IS, IT, LT, LU, LV, MC, MK, MT, NL, NO, PL, PT, RO, RS, SE, SI, SK, SM, TR), OAPI (BF, BJ, CF, CG, CI, CM, GA, GN, GQ, GW, KM, ML, MR, NE, SN, TD, TG).

Declarations under Rule 4.17:
— *of inventorship (Rule 4.17(iv))*

Published:
— *with international search report (Art. 21(3))*

(54) Title: ENERGY TRANSFER MECHANISM FOR WELLBORE JUNCTION ASSEMBLY

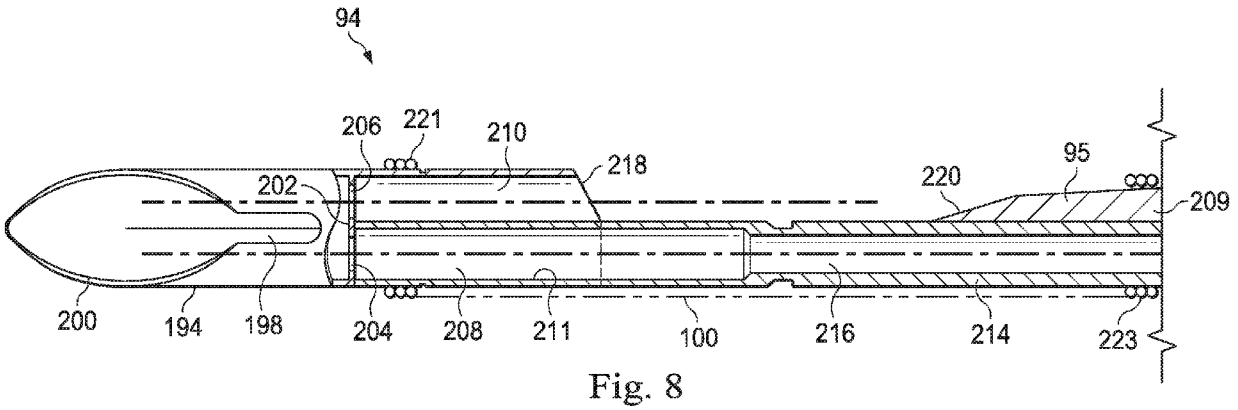

Fig. 8

(57) Abstract: A unitary multilateral junction for deployment in a wellbore, wherein the multilateral junction permits electrical power and communications signals to be established in both a lateral wellbore and a main wellbore utilizing. The unitary junction assembly generally includes a conduit with a first upper aperture, a first lower aperture and a second lower aperture where the first lower aperture is defined at the distal end of a primary passageway extending from a conduit junction and a second lower aperture defined at the distal end of a lateral passageway extending from the conduit junction. A lower wireless energy transfer mechanism is positioned along at least one of the passageways between the distal end of the passageway and the junction. The lower wireless energy transfer mechanism is in wired communication an upper energy transfer mechanism permitting electrical communication to be established across the intersection of wellbore branches utilizing the unitary junction.

WO 2018/222197 A1

ENERGY TRANSFER MECHANISM FOR WELLBORE JUNCTION ASSEMBLY

TECHNICAL FIELD

[0001] The present disclosure relates generally to completing wellbores in the oil and gas industry and, more particularly, to a multilateral junction that permits electrical power and communications signals to be established in both a lateral wellbore and a main wellbore utilizing a unitary multilateral junction.

BACKGROUND

[0002] In the production of hydrocarbons, it is common to drill one or more secondary wellbores (alternately referred to as lateral or branch wellbores) from a primary wellbore (alternately referred to as parent or main wellbores). The primary and secondary wellbores, collectively referred to as a multilateral wellbore may be drilled, and one or more of the primary and secondary wellbores may be cased and perforated using a drilling rig. Thereafter, once a multilateral wellbore is drilled and completed, production equipment such as production casing, packers and screens is installed in the wellbore, the drilling rig may be removed and the primary and secondary wellbores are allowed to produce hydrocarbons.

[0003] It is often desirable during the installation of the production equipment to include various electrical devices such as permanent sensors, flow control valves, digital infrastructure, optical fiber solutions, Intelligent Inflow Control Devices (ICD's), seismic sensors, vibration inducers and sensors and the like that can be monitored and controlled remotely during the life of the producing reservoir. Such equipment is often referred to as intelligent well completion equipment and permits production to be optimized by collecting, transmitting, and analyzing completion, production, and reservoir data; allowing remote selective zonal control and ultimately maximizing reservoir efficiency. Typically, communication signals and electrical power between the surface and the intelligent well completion equipment are via cables extending from the surface. These cables may extend along the interior of a tubing string or the exterior of a tubing string or may be integrally formed within the tubing string walls. However, it will be appreciated that to maintain the integrity of the well, it is desirable for a cable not to breach or cross over pressure barriers formed by the various tubing, casing and components (such as packers, collars, hangers, subs and the like) within the well. For example, it is generally undesirable for a cable to pass between an interior and exterior of a tubing string since the aperture or passage through

which the cable would pass could represent a breach of the pressure barrier formed between the interior and exterior of the tubing.

[0004] Moreover, because of the construction of the well, it may be difficult to deploy control cable from the surface to certain locations within the well. The presence of junctions between various tubing, casings and, components such as packers, collars, hangers, subs and the like, within the wellbore, particularly when separately installed, may limit the ability to extend cables to certain portions of the wellbore. This is particularly true in the case of lateral wellbores since completion equipment in lateral wellbores is installed separately from installation of completion equipment in the main wellbore. In this regard, it becomes difficult to extend cabling through a junction at the intersection of two wellbores, such as the main and lateral wellbores, because of the installation of equipment into more than one wellbore requires separate trips since the equipment cannot be installed at the same time unless the equipment is small enough to fit side-by-side in the main bore while tripping in the hole. Secondly, if there is more than one wellbore, the equipment would have to be spaced out precisely so that each segment of lateral equipment would be able to exit into its own lateral wellbore at the precise time the other equipment was exiting into their respective laterals, while at the same time maintaining connectivity with other locations in the wellbore.

BRIEF DESCRIPTION OF THE DRAWINGS

[0005] FIG. 1a depicts an offshore well completion system having a unitary junction assembly installed at the intersection of a main wellbore and a lateral wellbore, according to one or more illustrative embodiments;

[0006] FIG. 1b depicts an offshore well completion system having a unitary flexible junction assembly installed at the intersection of a main wellbore and a lateral wellbore, according to one or more illustrative embodiments;

[0007] FIG. 1c depicts a unitary junction assembly installed in a multilateral wellbore completion system with wireless energy transfer mechanisms deployed to permit energy and data transfer across the junction, according to one or more illustrative embodiments;

[0008] FIG. 2 depicts the deflector installed in an offshore well completion system of FIG. 1b, according to one or more illustrative embodiments;

[0009] FIG. 3 depicts the unitary flexible junction assembly installed in an offshore well completion system of FIG. 1b, according to one or more illustrative embodiments;

[00010] FIG. 4 depicts the unitary flexible junction assembly of FIG. 3 engaged with the deflector of FIGS. 2, according to one or more illustrative embodiments;

[00011] FIG. 5 depicts the unitary flexible junction assembly of FIG. 3 during deployment in a multilateral well completion system, prior to engagement with the deflector of FIGS. 2, according to one or more illustrative embodiments;

[00012] FIG. 6 depicts the unitary flexible junction assembly of FIG. 3 after deployment in a multilateral well completion system, engaged with the deflector of FIGS. 2 and a lateral lower completion assembly, according to one or more illustrative embodiments;

[00013] FIGS. 7a-7b depict tubing string carrying wireless energy transfer mechanisms engaged with a unitary junction assembly;

[00014] FIG. 8 depicts the unitary junction assembly installed in an offshore well completion system of FIG. 1a, according to one or more illustrative embodiments;

[00015] FIGS. 9a-9b each depict a vector or junction block which may be positioned upstream of deflector as part of an upper completion assembly of FIGS. 1a and 1b, according to one or more illustrative embodiments.

DETAILED DESCRIPTION

[00016] The disclosure may repeat reference numerals and/or letters in the various examples or figures. This repetition is for the purpose of simplicity and clarity and does not in itself dictate a relationship between the various embodiments and/or configurations discussed. Further, spatially relative terms, such as beneath, below, lower, above, upper, uphole, downhole, upstream, downstream, and the like, may be used herein for ease of description to describe one element or feature's relationship to another element(s) or feature(s) as illustrated, the upward direction being toward the top of the corresponding figure and the downward direction being toward the bottom of the corresponding figure, the uphole direction being toward the surface of the wellbore, the downhole direction being toward the toe of the wellbore. Unless otherwise stated, the spatially relative terms are intended to encompass different orientations of the apparatus in use or operation in addition to the orientation depicted in the figures. For example, if an apparatus in the figures is turned over, elements described as being "below" or "beneath" other elements or features would then be oriented "above" the other elements or features. Thus, the exemplary term "below" can encompass both an orientation of above and below. The apparatus may be otherwise oriented (rotated 90 degrees or at other orientations) and the spatially relative descriptors used herein may likewise be interpreted accordingly.

[00017] Moreover, even though a figure may depict a horizontal wellbore or a vertical wellbore, unless indicated otherwise, it should be understood by those skilled in the art that

the apparatus according to the present disclosure is equally well-suited for use in wellbores having other orientations including, deviated wellbores, multilateral wellbores, or the like. Likewise, unless otherwise noted, even though a figure may depict an offshore operation, it should be understood by those skilled in the art that the apparatus according to the present disclosure is equally well-suited for use in onshore operations and vice-versa.

[00018] Generally, a multilateral wellbore system is provided for placement at branch junctions within wellbores. The system comprises a junction assembly having a conduit with a first upper aperture, a first lower aperture and a second lower aperture, where the first lower aperture is defined at the distal end of a primary leg extending from a conduit junction and the second lower aperture is defined at the distal end of a lateral leg extending from the conduit junction. Preferably, the junction assembly is a unitary assembly and at least one of the legs is deformable. The junction assembly further includes an upper energy transfer mechanism (ETM) mounted on the conduit between the first upper aperture and the conduit junction and at least a first lower wireless energy transfer mechanism (WETM) mounted on the primary leg of the junction assembly between the junction and the first lower aperture. The upper ETM may be a WETM. Preferably, the junction assembly includes a lower WETM mounted on each of the primary and lateral legs and in electrical communication with the upper ETM. The WETM in each case may be an inductive coupler coil or segment disposed to wirelessly transfer energy and signals to another inductive coupler coil when positioned adjacent one another. The signals may be control, data or other types of communication signals. In the case of a unitary junction assembly, the unitary nature of junction assembly permits the upper ETM to be in wired communication with one or both of the lower WETMs without the need for connectors therebetween as would be the case with multi-piece junction assemblies assembled downhole at the wellbore junction.

[00019] Turning to Figures 1a and 1b, shown is an elevation view in partial cross-section of a multilateral wellbore completion system 10 utilized to complete wells intended to produce hydrocarbons from wellbore 12 extending through various earth strata in an oil and gas formation 14 located below the earth's surface 16. Wellbore 12 is formed of multiple bores, extending into the formation 14, and may be disposed in any orientation, such as lower main wellbore portion 12a and lateral wellbore 12b illustrated in Figures 1a and 1b.

[00020] Completion system 10 may include a rig or derrick 20. Rig 20 may include a hoisting apparatus 22, a travel block 24, and a swivel 26 for raising and lowering casing, drill pipe, coiled tubing, production tubing, work strings or other types of pipe or tubing strings, generally referred to herein as string 30. In Figures 1a and 1b, string 30 is substantially

tubular, axially extending production tubing supporting a completion assembly as described below. String 30 may be a single string or multiple strings as discussed below.

[00021] Rig 20 may be located proximate to or spaced apart from wellhead 32, such as in the case of an offshore arrangement as shown in Figures 1a and 1b. One or more pressure control devices 34, such as blowout preventers (BOPs) and other equipment associated with drilling or producing a wellbore may also be provided at wellhead 32 or elsewhere in the system 10.

[00022] For offshore operations, as shown in Figures 1a and 1b, rig 20 may be mounted on an oil or gas platform 36, such as the offshore platform as illustrated, semi-submersibles, drill ships, and the like (not shown). Although system 10 of Figures 1a and 1b is illustrated as being a marine-based multilateral completion system, system 10 of Figures 1a and 1b may be deployed on land. In any event, for marine-based systems, one or more subsea conduits or risers 38 extend from deck 40 of platform 36 to a subsea wellhead 32. Tubing string 30 extends down from rig 20, through subsea conduit 38 and BOP 34 into wellbore 12.

[00023] A working or service fluid source 42, such as a storage tank or vessel, may supply, via flow lines 44, a working fluid (not shown) pumped to the upper end of tubing string 30 and flow through string 30 to equipment disposed in wellbore 12, such as subsurface equipment 48. Working fluid source 42 may supply any fluid utilized in wellbore operations, including without limitation, drilling fluid, cement slurry, acidizing fluid, liquid water, steam or some other type of fluid. Production fluids, working fluids, cuttings and other debris returning to surface 16 from wellbore 12 may be directed by a flow line 44 to storage tanks 50 and/or processing systems 52, such as shakers, centrifuges, other types of liquid/gas separators and the like.

[00024] With reference to Figure 1c and ongoing reference to Figures 1a and 1b, all or a portion of the main wellbore 12a is lined with liner or casing 54 that extends from the wellhead 32, which casing 54 may include the surface, intermediate and production casings as shown in Figure 1. Casing 54 may be comprised of multiple strings with lower strings extending from or otherwise hung off an upper string utilizing a liner hanger 184 (see Figure 5). For purposes of the present disclosure, these multiple strings will be jointly referred to herein as the casing 54. An annulus 58 is formed between the walls of sets of adjacent tubular components, such as concentric casing strings 54; or the exterior of string 30 and the inside wall of a casing string 54; or the wall of wellbore 12 and a casing string 54, as the case may be. For outer casing 54, all or a portion of the casing 54 may be secured within the main wellbore 12a by depositing cement 60 within the annulus 58 defined between the casing 54

and the wall of the main wellbore 12. In some embodiments, the casing 54 includes a window 62 formed therein at the intersection 64 between the main wellbore 12a and a lateral wellbore 12b.

[00025] As shown in Figures 1a, 1b and 1c, subsurface equipment 48 is illustrated as completion equipment and tubing string 30 in fluid communication with the completion equipment 48 is illustrated as production tubing 30. Although completion equipment 48 can be disposed in a wellbore 12 of any orientation, for purposes of illustration, completion equipment 48 is shown disposed in each of the main wellbore 12a, and a substantially horizontal portion of lateral wellbore 12b. Completion equipment 48 may include a lower completion assembly 66 having various tools, such as an orientation and alignment subassembly 68, one or more packers 70 and one or more sand control screen assemblies 72. Lower completion assembly 66a is shown disposed in main wellbore 12a, while lower completion assembly 66b is shown disposed in lateral wellbore 12b. It will be appreciated that the foregoing is simply illustrative and that lower completion assembly 66 is not limited to particular equipment or a particular configuration.

[00026] Disposed in wellbore 12 at the lower end of tubing string(s) 30 is an upper completion assembly 86 that may include various equipment such as packers 88, flow control modules 90 and electrical devices 102, such as sensors or actuators, computers, (micro) processors, logic devices, other flow control valves, digital infrastructure, optical fiber, Intelligent Inflow Control Devices (ICDs), seismic sensors, vibration inducers and sensors and the like. Upper completion assembly 86 may also include an energy transfer mechanism (ETM) 91, which may be wired or wireless, such as an inductive coupler segment. In the case of a wireless ETM, namely, a WETM, although the disclosure contemplates any WETM utilized to wireless transfer power and/or communication signals, in specific embodiments, the wireless ETMs discussed herein may be inductive coupler coils or other electric components, and for the purposes of illustration, will be referred to herein generally as an inductive coupler segments. It will be appreciated that the ETMs generally, and WETMs specifically, may be used for a variety of purposes, including but not limited to transferring energy, gathering data from sensors, communicating with sensors or other electrical devices, controlling electric devices along the length of the lateral completion assembly, charging batteries, long-term storage capacitors or other energy storage devices deployed downhole, powering/controlling/regulating Inflow Control Devices ("ICDs"), etc. In one or more embodiments ETM 91 is in electrical communication with packer 88 and/or flow control modules 90 and/or electrical devices 102 or may otherwise comprise electrical devices 102.

ETM 91 may be integrally formed as part of packer 88 or flow control module 90, or separate therefrom. ETM 91 may be an inductive coupler segment 91 or some other WETM. To the extent separate tubing strings 30 extend from the surface 16 to upper completion assembly 86, then one tubing string may communicate with main wellbore 12a, while another tubing string (see Figure 9b) may communicate with lateral wellbore 12b, thereby segregating the production from each wellbore 12a, 12b. In such case, packer 88 may be a dual bore packer.

[00027] At the intersection 64 of the main wellbore 12a and the lateral wellbore 12b is a junction assembly 92 engaging a location mechanism 93 secured within main wellbore 12a. The location mechanism 93 serves to support the junction assembly 92 at a desired vertical location within casing 54, and may also maintain the junction assembly 92 in a predetermined rotational orientation with respect to the casing 54 and the window 62. Location mechanism 93 may be any device utilized to vertically (relative to the primary axis of main wellbore 12a) secure equipment within wellbore 12a, such as a latch mechanism. In one or more embodiments, junction assembly 92 is a deformable junction that generally comprises a deformable, unitary conduit 96 (see Figure 3). In one or more embodiments, junction assembly 92 may be a rigid conduit 95 (see Figure 7). In embodiments of junction assembly 92 where junction assembly 92 is a deformable junction that comprises a deformable conduit 96, the junction assembly 92 may be deployed with a deflector 94 (see Figure 2) which may be disposed to engage the location mechanism 93. In other embodiments, junction assembly 92 may comprise deflector 94. Junction assembly 92 generally permits communication between the upper portion of wellbore 12 and both the lower portion of wellbore 12a and the lateral wellbore 12b. In this regard, junction assembly 92 may be in fluid communication with upper completion assembly 86. In one or more embodiments, junction assembly 92 is a unitary assembly in that it is installed as a single, assembled component or otherwise, integrally assembled before installation at intersection 64. Such a unitary assembly, as will be discussed in more detail below, permits inductive coupling communication to both the lower main wellbore 12a and the lateral wellbore 12b without the need for wet connections or physical couplings, while at the same time minimizing the sealing issues prevalent in the prior art as explained below.

[00028] Significantly, such a unitary assembly minimizes the likelihood that debris within the wellbore fluids will inhibit sealing at the junction 64. Commonly, wellbore fluid has 3% or more suspended solids, which can settle out in areas such as junction 64 causing the seals in the area to be in-effective. Because of this, prior art junctions installed in multiple pieces or steps, cannot readily provide reliable high-pressure containment (>2,500-psi for example)

and wireless power/communications simultaneously. Debris can become trapped between components of the prior art multi-part junctions as they are assembled downhole, jeopardizing proper mating and sealing between components. Further drawbacks can be experienced to the extent the multi-part junctions are non-circular, which is a common characteristic of many prior art junction assemblies. In this regard, a multi-part junction which requires the downhole assembly (or engagement) of non-circular components is prone to leakage due to 1) the environment and 2) inability to remove debris from the sealing areas. The typical downhole environment where a multi-piece junction is assembled is contaminated with drilling solids suspended in the fluid. In addition, the multi-piece junction is assembled in a location where metal shavings are likely to exist from milling a window (hole) in the side of the casing. The metal shavings can fall out into the union of the mainbore casing and the lateral wellbore. This area is large and non-circular which makes it very difficult to flush the shavings and drill cuttings out of the area. Furthermore, the sealing areas of a multi-part junction are not circular (non-circular) which prevents the sealing areas from being fully "wiped cleaned" to remove the metal shavings and drill cuttings prior to engagement of the seals and the sealing surfaces. In addition, the sealing surfaces may contain square shoulders, channels, and/or grooves which further inhibits cleaning of all of the drilling debris from them. Notably, in many cases, because of the non-circular nature of the components between which a seal is to be established, traditional elastomeric seals may not be readily utilized, but rather, sealing must be accomplished with metallic sealing components such as labyrinth seals. As is known in the industry labyrinth seals typically do not provide the same degree of sealing as elastomeric seals. Moreover, being made of metal interleaved surfaces, the seal components will be difficult to clean prior to engagement with one another.

[00029] In contrast, a unitary junction assembly 92 as described herein is assembled on the surface in a clean environment so that all sealed connections can be inspected, cleaned prior to assembly and then pressure-tested before being run into the well. Moreover, the unitary junction assembly 92 eliminates the need for labyrinth seals as found in the prior art junction assemblies. Extending along each of lower completion assemblies 66a, 66b is one or more electrical control lines or cables 100 mounted along either the interior or exterior of lower completion assembly 66. Control lines 100 may pass through packers 70 and may be operably associated with one or more electric devices 102 of the lower completion assembly 66. Electric devices 102 may include sensors or actuators, controllers, computers, (micro) processors, logic devices, other flow control valves, digital infrastructure, optical fiber,

Intelligent Inflow Control Devices (ICDs), seismic sensors, ETMs, WETMs, vibration inducers and sensors and the like, as well as other inductive coupler segments. Control lines 100 may operate as communication media, to transmit power, or data and the like between a lower completion assembly 66 and an upper completion assembly 86 via junction assembly 92. Data and other information may be communicated using electrical signals or other telemetry that can be converted to electrical signals to, among other things, monitor and control the conditions of the environment and various tools in lower completion assembly 66 or other tool string.

[00030] Extending uphole from upper completion assembly 86 are one or more electrical control lines 104 which extend to the surface 16. Control lines 104 may be electrical, hydraulic, optic, or other lines. Control lines 104 may operate as communication media, to transmit power, signals or data and the like between a controller, commonly at or near the surface (not shown), and the upper and lower completion assemblies 86, 66, respectively.

[00031] Carried on production tubing 30 is a ETM 106 as will be described in more detail below, with a control line 104 extending from ETM 106 to surface 16. In one or more embodiments, ETM is a WETM, and may be in the form of an inductive coupler segment 106.

[00032] Likewise, deployed in association with junction assembly 92 are two or more ETMs 108, at least of which, one is a WETM, with one or more control lines 100 extending from junction assembly 92. More specifically, in one or more embodiments, junction assembly 92 includes an upper ETM 108a, which is preferably in the form of a WETM, and for at least one wellbore 12, and preferably both for each of the main wellbore 12a and the lateral wellbore 12b, junction assembly 92 includes a WETM 108b, 108c, respectively, preferably in the form of inductive coupler segments where the inductive coupler segments 108b, 108c communicate with an upper ETM 108a all carried on junction assembly 92. In one or more embodiments, in the case of inductive coupler segments 108b, 108c, each WETM is downhole from the intersection 64 when junction assembly 92 is installed in wellbore 12.

[00033] Finally, at least one ETM 110, and preferably a WETM such as an inductive coupler segment, is deployed in lateral wellbore 12b in association with lower completion assembly 66b. It will be appreciated that when two WETMs are axially aligned (such as is shown in Figure 4 by inductive coupler segments 108b and 136), wireless coupling between the aligned coupler segments can permit wireless transfer between the segments of power and/or monitoring and control signals. This is particularly true where the WETMs are

inductive coupler segments so as to facilitate inductive coupling between the WETMs. While in some embodiments, the two aligned inductive coupler segments are on opposite sides of a pressure barrier (such as within the interior of a pressure conduit and on the exterior of a pressure conduit), in other embodiments, the two inductive coupler segments may be on the same side of a pressure conduit, simply permitting a connector-less coupling for transmission of power and/or signals.

[00034] Turning to Figures 2, 3 and 4, embodiments of unitary junction assembly 92 having a deformable conduit 96 are illustrated and generally includes (a) an upper section for attachment to a pipe string and having a first upper aperture; (b) a lower section comprising a primary passageway ending in a first lower aperture for fluid communication with a deflector and a secondary passageway ending in a second lower aperture for fluid communication with the secondary wellbore; and (c) a deformable portion. One or more of the passageways may be formed along a leg whereby the conduit is separated into the primary leg and the secondary leg, thereby forming a unitary multilateral junction, the unitary nature of which permits junction assembly 92 to be installed in as a single unit that can more readily be used to transfer power and/or communication signals to both the lower main wellbore 12a and the lateral wellbore 12b. The deformable portion may be a leg or conduit junction located between the upper section and the lower section of the conduit.

[00035] The embodiments of junction assembly 92 illustrated in Figures 2, 3 and 4 may be deployed in conjunction with a deflector 94 which may be used to position junction assembly 92. With specific reference to Figures 2 and 4, deflector 94 is positioned along casing 54 adjacent the intersection 64 between the main wellbore 12a and lateral wellbore 12b. In particular, the deflector 94 is located distally to the intersection 64, adjacent or in close proximity to it, such that when equipment is inserted through the main wellbore 12a, the equipment can be deflected into the lateral wellbore 12b at the intersection 64 a result of contact with the deflector 94. The deflector 94 may be anchored, installed or maintained in position within the main wellbore 12a using any suitable conventional apparatus, device or technique.

[00036] The deflector 94 has an external surface 112, an upper end 114, a lower end 116 and an internal surface 118. The external surface 112 of the deflector 94 may have any shape or configuration so long as the deflector 94 may be inserted in the main wellbore 12a in the manner described herein. In one or more embodiments, the external surface 112 of the deflector 94 is preferably substantially tubular or cylindrical such that the deflector 94 is generally circular on cross-section.

[00037] In preferred embodiments, the deflector 94 may include a seal assembly 120 positioned along external surface 112 to provide a seal between the external surface 112 of the deflector 94 and the internal surface 122 of the casing 54 of main wellbore 12a. Thus, wellbore fluids are inhibited from passing between the deflector 94 and the casing 54. As used herein, a seal assembly, such as seal assembly 120, may be any conventional seal or sealing structure. For instance, a seal assembly such as seal assembly 120 may be comprised of one or a combination of elastomeric or metal seals, packers, slips, liners or cementing. Likewise, a seal assembly such as seal assembly 120 may also be a sealable surface. Seal assembly 120 may be located at, adjacent or in proximity to the lower end 116 of the deflector 94.

[00038] The deflector 94 further comprises a deflecting surface 124 located at the upper end 114 of the deflector 94 and a seat 126 for engagement with the junction assembly 92. When positioned in the main wellbore 12a, as shown in Figure 2, the deflecting surface 124 is located adjacent the lateral wellbore 12b such that equipment inserted through the main wellbore 12a may be deflected into the lateral wellbore 12b to the extent the equipment cannot pass through deflector 94 as described below. The deflecting surface 124 may have any shape and dimensions suitable for performing this function, however, in preferred embodiments, the deflecting surface 124 provides a sloped surface which slopes from the upper end 114 of the deflector 94 downwards, towards the lower end 116 of the deflector 94.

[00039] The seat 126 of the deflector 94 may also have any suitable structure or configuration capable of engaging the junction assembly 92 to position or land the junction assembly 92 in the main and lateral wellbores 12a, 12b in the manner described herein. In the preferred embodiment, when viewing the deflector 94 from its upper end 114, the seat 126 is offset to one side opposite the deflecting surface 124.

[00040] Further, in the preferred embodiment, the deflector 94 further comprises a deflector bore 128 associated with the seat 126. The deflector bore 128 is associated with the seat 126, which engages the junction assembly 92, in a manner such that the movement of fluids in the main wellbore 12a through the deflector 94 and through the junction assembly 92 is facilitated.

[00041] The deflector bore 128 extends through the deflector 94 from the upper end 114 to the lower end 116. The deflector bore 128 preferably includes an upper section 130, adjacent the upper end 114 of the conduit 94, communicating with a lower section 132, adjacent the lower end 116. Preferably, the seat 126 is associated with the upper section 130. Further, in the preferred embodiment, the seat 126 is comprised of all or a portion of the upper section

130 of the deflector bore 128. In particular, the upper section 130 is shaped or configured to closely engage the junction assembly 92 in the manner described below. The bore of the lower section 132 of the deflector bore 128 preferably expands from the upper section 130 to the lower end 116 of the deflector 94. In other words, the cross-sectional area of the lower section 132 increases towards the lower end 116. Preferably, the increase in cross-sectional area is gradual and the cross-sectional area of the lower section 132 adjacent the lower end 116 is as close as practically possible to the cross-sectional area of the lower end 116 of the deflector 94.

[00042] Disposed along bore 128 is a seal assembly 134. Seal assembly 134 may be any conventional seal assembly. For instance, the seal assembly 134 may be comprised of one or a combination of seals and sealing surfaces or friction fit surfaces. In one or more embodiments, seal assembly 134 is located along the inner surface 118 in upper section 130 of the deflector 94.

[00043] Deflector 94 further includes an ETM 136, and preferably, a WETM 136, mounted thereon. In one or more embodiments, WETM 136 is inductive coupler segment, and for purposes of this discussion, without intending to limit the WETM 136, will be discussed as a inductive coupler segment. While inductive coupler segment 136 may be mounted internally or externally along deflector 94, in one or more embodiments, inductive coupler segment 136 is deployed internally along bore 128. In one or more preferred embodiments, inductor segment 136 is mounted upstream of seals 134 between seals 134 and upper end 114 so that a cable 100 extending down from deflector 94 to lower completion assembly 66a. Likewise, in one or more preferred embodiments, inductor segment 136 is mounted downstream of seals 134 between seals 134 and lower end 116 so that a cable 100 extending down from deflector 94 to lower completion assembly 66a does not interfere with seal 134. In this regard, inductive coupler segment 136 is preferably located below seat 126.

[00044] Referring to Figures 3 and 4, junction assembly 92 may be comprised of a conduit having a deformable portion 96 with an outside surface 140 as described below. In some embodiments, the conduit 96 is generally tubular or cylindrical in shape such that the conduit 96 is generally circular on cross-section and defines an outside diameter. In some embodiments, conduit 96 may have a D-shaped cross-section, while in other embodiments, conduit 96 may have other cross-sectional shapes. Conduit 96 includes an upper section 142, a lower section 144 and a conduit junction 146. In one or more embodiments, the conduit junction is the deformable portion, while in other embodiments, the conduit junction is rigid and one or both of the conduit legs is deformable. The upper section 142 is comprised of a

proximal end 147 opposing the conduit junction 146 with a first upper aperture 145 defined in the upper section 142. Thus, the upper section 142 extends from the junction 146, in a direction away from the lower section 144, for a desired length to the proximal end 147. In addition, the upper section 142 may further include a polished bore receptacle (PBR) 149 shown in Figure 4, either integrally formed or secured to proximal end 147. The junction assembly 92 may include a liner hanger 184 in combination with the conduit 96 to support the conduit in the wellbore 12.

[00045] In one or more embodiments, the conduit 96 is unitary. In this regard, conduit 96 may be integrally formed, in that the upper section 142, the lower section 144 and the conduit junction 146 are comprised of a single piece or structure. Alternately, the conduit 96, and each of the upper section 142, the lower section 144 and the conduit junction 146, may be formed by interconnecting or joining together two or more pieces or portions that are assembled into a unitary structure prior to deployment in wellbore 12.

[00046] The lower section 144 is comprised of (i) a primary leg 148 having a wall 148', the primary leg 148 extending from the conduit junction 146 and (ii) a secondary or lateral leg 150 having a wall 150', the lateral leg 150 extending from the conduit junction 146. The primary leg 148 is capable of engaging the seat 126 (see Figure 2) of the deflector 94, while the lateral leg 150 is capable of being inserted into the lateral wellbore 12b. The conduit junction 146 is located between the upper section 142 and the lower section 144 of the conduit 96 comprising the junction assembly 92, whereby the conduit 96, and in particular the lower section 144, is separated or divided into the primary and lateral legs 148, 150.

[00047] The primary leg 148 has a distal end 152 opposing the conduit junction 146 with a first lower aperture 151 defined at the distal end 152. Thus, the primary leg 148 extends from the conduit junction 146, in a direction away from the upper section 142 of the conduit 96, for a desired length to the distal end 152 of the primary leg 148. In the preferred embodiment, the primary leg 148 is tubular or hollow such that fluid may be conducted between the first upper aperture 145 of the upper section 142, past the conduit junction 146 to the first lower aperture 151 of the distal end 152. Thus, fluid may be conducted through the main wellbore 12a by passing through the conduit 96 of the junction assembly 92 and the deflector bore 128 of the deflector 94.

[00048] The secondary or lateral leg 150 also has a distal end 154 opposing the junction 146 with a second lower aperture 153 defined at the distal end 154. Thus, the secondary leg 150 extends from the conduit junction 146, in a direction away from the upper section 142 of the conduit 96, for a desired length to the distal end 154 of the secondary leg 150. The

secondary leg 150 is tubular or hollow for conducting fluid between the first upper aperture 145 of the upper section 142, past the conduit junction 146 to the second lower aperture 153 of the distal end 154. In the illustrated embodiment, lateral leg 150 is deformable. In other embodiments, both of legs 148, 150 may be deformable.

[00049] As used herein, "deformable" means any pliable, movable, flexible or malleable conduit that can be readily manipulated to a desired shape. The conduit may either retain the desired shape or return to its original shape when the deforming forces or conditions are removed from the conduit. .For example, lateral leg 150 is movable or flexes relative to primary leg 148 due to conduit junction 142.

[00050] Junction assembly 92 further includes first, second and third inductive coupler segments 108a, 108b and 108c. First inductive coupler segment 108a is preferably positioned along upper section 142 between proximal end 147 and conduit junction 146. Second inductive coupler segment 108b is positioned along primary leg 148 between conduit junction 146 and distal end 152, while third inductive coupler segment 108c is positioned along secondary leg 150 between conduit junction 146 and distal end 154. In the case of second and third inductive coupler segments 108b and 108c, the segments are preferably positioned adjacent the distal end 152, 154, respectively, of the primary leg 148 and secondary leg 150. Likewise, in the case of the first, second and third inductive coupler segments 108a, 108b and 108c, they may be positioned either along the interior or exterior of junction assembly 92. In Figures 3 and 4, first, second and third inductive coupler segments 108a, 108b and 108c are illustrated as being positioned along the exterior of junction assembly 92. As illustrated, a cable 100 extends from first inductive coupler segment 108a down to each of the second and third inductive coupler segments 108b and 108c. Because junction assembly 92 is unitary in nature, it allows first inductive coupler segment 108a to be readily connected to both the second and third inductive coupler segments 108b and 108c since the interconnections need not bridge separately installed components as would commonly occur in the prior art with multi-piece junction assemblies.

[00051] In any event, primary leg 148 may be of any length permitting the primary leg 148 to engage the seat 126 of the deflector 94 and inductive coupler segment 108b to be positioned in the vicinity of, and generally aligned with, inductive coupler segment 136 of deflector 94. In this regard, inductive coupler segments 136 and 108b may be on the same side of a pressure barrier, and thus, adjacent one another, or separated by a pressure barrier, and thus, simply aligned with one another. In any event, the secondary leg 150 may be of any length permitting the secondary leg 150 to be deflected into the lateral wellbore 12b.

Further, the primary and secondary legs 148, 150 may be of any lengths relative to each other. However, in the preferred embodiment, the secondary leg 150 is longer than the primary leg 148 such that the distal end 154 of the secondary leg 150 extends beyond the distal end 152 of the primary leg 148 when the conduit junction 146 is substantially undeformed.

[00052] With respect to the alignment of coupler segments, it will be understood that two segments may require axial alignment, circumferential alignment or both.

[00053] In one or more preferred embodiments, when the secondary leg 150 is in a substantially undeformed position as shown in Figure 3, the primary leg 148 and the secondary leg 150 are substantially parallel to each other. However, the primary and secondary legs 148, 150 need not be substantially parallel to each other, and the longitudinal axes of the primary and secondary legs 148, 150 need not be substantially parallel to the longitudinal axis of the conduit 96, as long as the conduit 96 may be inserted and lowered into the main wellbore 12a when the secondary leg 150 is in a substantially undeformed position.

[00054] When the junction assembly 92 is connected to a pipe string 30 and lowered in the main wellbore 12a, the secondary leg 150 is capable of being deflected into the lateral wellbore 12b by the deflector 94 such that the deformable conduit junction 146 becomes deformed and the primary leg 148 then engages the seat 126 of the deflector 94, as shown in Figure 4. The deformable conduit junction 146 separates the primary leg 148 and the secondary leg 150 and permits the placement of the junction assembly 92 in the main and lateral wellbores 12a, 12b.

[00055] As stated, the primary leg 148 is capable of engagement with the seat 126 of the deflector 94. Thus, the shape and configuration of the primary leg 148 is chosen or selected to be compatible with the seat 126, being the upper section 130 of the deflector bore 128 in the preferred embodiment.

[00056] Further, the seat 126 engages the primary leg 148 such that the movement of fluid in the main wellbore 12a, through the deflector 94 and the conduit 96, is facilitated. Preferably, the primary leg 148 engages the seat 126 to provide a sealed connection between the deflector 94 and the main wellbore 12a. Any conventional seal assembly 134 may be used to provide this sealed connection. For instance, the seal assembly 134 may be comprised of one or a combination of seals or a friction fit between the adjacent surfaces. In the preferred embodiment, the seal assembly 134 is located between the primary leg 148 and the upper section 130 of the deflector bore 128 when the primary leg 148 is seated or engages the seat

126. The seal assembly 134 may be associated with either the primary leg 148 or the upper section 130 of the deflector bore 128. However, preferably, the seal assembly 134 is associated with the upper section 130 of the deflector bore 128.

[00057] Primary leg 148 may include a guide 158 for guiding the primary leg 148 into engagement with the seat 126. The guide 158 may be positioned at any location along the length of the primary leg 148 which permits the guide 158 to perform its function. However, preferably, the guide 158 is located at, adjacent or in proximity to the distal end 152 of the primary leg 148. The guide 158 may be of any shape or configuration capable of guiding the primary leg 148. However, preferably the guide 158 has a rounded end 160 to facilitate transmission down the wellbore 12, as shown in Figure 2 and 4.

[00058] The secondary leg 150 may include an expansion section 162 located at, adjacent or in proximity to the distal end 154 of the secondary leg 150. The expansion section 162 comprises a cross-sectional expansion of the secondary leg 150 in order to increase its cross-sectional area. As indicated above, the length of the secondary leg 150 is greater than the length of the primary leg 148 in the preferred embodiment. Preferably, the secondary leg 150 commences its cross-sectional expansion to form the expansion section 162 at a distance from the conduit junction 146 approximately equal to or greater than the distance of the distal end 152 of the primary leg 148 from the conduit junction 146. Thus, when the conduit junction 146 is undeformed, the expansion section 162 is located beyond or distal to the distal end 152 of the primary leg 148 as shown in Figure 3.

[00059] A liner 164 for lining the lateral wellbore 12b may extend from conduit 96. The liner 164 may be any conventional liner, including a perforated liner, a slotted liner or a prepacked liner. In one or more embodiments, the liner 164 may form part of the lower completion assembly 66b in lateral wellbore 12b, while it in other embodiments, liner 164 may be a separate and generally in fluid communication with conduit 96. In any event, liner includes a proximal end 166 and a distal end 168, where the proximal end 166 is attached to the distal end 154 of the secondary leg 150. The distal end 168 extends into the lateral wellbore 12b such that all or a portion of the lateral wellbore 12b is lined by the liner 164. Thus, junction assembly 92 may function to hang the liner 164 in the lateral wellbore 12b. Alternatively, as discussed below, a stinger 172 (see Figure 5), may be attached to the distal end 154 of secondary leg 150 and utilized to transport liner 164 and/or other components of a lower completion assembly 66 (see Figure 5) into lateral wellbore 12b.

[00060] The upper section 142 conducts fluid therethrough from the deformable conduit junction 146 to the proximal end 147. In the preferred embodiment, the upper section 142

permits the mixing or co-mingling of any fluids passing from the primary and secondary legs 148, 150 into the upper section 142. However, alternately, the upper section 142 may continue the segregation of the fluids from the primary and secondary legs 148, 150 through the upper section 142. Thus, the fluids are not permitted to mix or co-mingle in the upper section 142.

[00061] Junction assembly 92 may also include one or more seal assemblies 170 associated with it. Seal assemblies 170 may be carried on conduit 96 or may be carried on adjacent equipment, such as a liner hanger (see liner hanger 184b in Figure 5) supporting junction assembly 92. As illustrated a seal assembly 170a is associated with the upper section 142 of the conduit 96, or may form or comprise a portion thereof, such that the seal assembly 170a provides a seal between the conduit 96 and casing 54 within the main wellbore 12a. Seal assembly 170a may be carried on conduit 96 such as shown in Figures 3 and 4, or some other adjacent equipment, such as shown in Figure 5, but is generally provided to seal the upper section 142 of junction assembly 92. Preferably, the seal assembly 170a is located between the outside surface 140 of the upper section 142 of the conduit 96 (other liner hanger 84, as the case may be) and the internal surface 122 of casing 54. Thus, seal assembly 170a inhibits wellbore fluids from passing between the conduit 96 and the casing string 54.

[00062] A seal assembly 170b is shown positioned along primary leg 64, preferably adjacent distal end 152, and a seal assembly 170c is shown positioned along secondary leg 150, preferably adjacent distal end 154. The seal assembly 170 may be comprised of any conventional seal or sealing structure. For instance, the seal assembly 170 may be comprised of one or a combination of seals, packers, slips, liners or cementing.

[00063] In one or more embodiments, where inductive coupler segments that are cabled to one another are positioned so that consecutive inductive coupler segments are on the same tubular, such as inductive coupler segments 108 illustrated on conduit 96, and are within the same pressure barrier, it may be desirable to position the inductive coupler segments between sets of sealing elements, such as seal assemblies 170a and 170b. This prevents the need for a cable, such as cable 100, from straddling or extending across a pressure barrier. As used herein, pressure barrier may refer to a wall between an interior and exterior of a tubular, such as a string or casing, or may refer to a zone defined by successive sets of seal assemblies along a tubular.

[00064] In one or more embodiments where cooperating inductive coupler segments, i.e., inductive coupler segments disposed to wirelessly transfer power and/or signals therebetween, are positioned adjacent one another within the same pressure barrier (as

opposed to simply aligned on opposite sides of a tubing wall), it may be necessary for a cable 100 extending to one of the inductive coupler segments to pass through a pressure barrier, such as a seal assembly, in order to electrically connect via cable 100 respective electrical components. For example, in Figure 4, primary leg 148 of a junction assembly 92 is inserted into bore 128 of deflector 94. As shown, the inductive coupler segment 136 carried by deflector 94 is adjacent inductive coupler segment 108b carried by junction assembly 92. Because the inductive coupler segments 136, 108b are within the same pressure barrier, the cable 100 extending from one of the inductive coupler segments 136, 108b must extend through or around a seal assembly, such as is shown where cable 100 extending from inductive coupler segment 136 to a downhole electrical device 102 passes through seal assembly 134 of deflector 94. In another embodiment, cable 100 may pass from the internal surface 118 to the external surface 112 of deflector 94 and then extend downhole along the external surface 112 of deflector 94.

[00065] Alternatively, it will be appreciated, that inductive coupler segment 136 may be located on the external surface 112 deflector 94 and simply aligned with inductive coupler segment 108b positioned on junction assembly 92 within the interior of deflector 94. In such case, no such pressure barrier need be crossed, and cable 100 may extend downhole to an electrical device 102 positioned within the pressure barrier of inductive coupler segment 136.

[00066] As best illustrated in Figure 5, in one or more embodiments, junction assembly 92 may include a stinger 172 attached to the distal end 154 of secondary leg 150. In such case, the third inductive coupler segment 108c of secondary leg 150 may be carried on stinger 172. More generally in Figure 5, a lower completion assembly 66a is illustrated deployed in the lower portion of a main wellbore 12a, while a lower completion assembly 66b is illustrated deployed in a lateral wellbore 12b. Although lower completion assemblies 66 as described herein are not limited to a particular configuration, for purposes of illustration, lower completion assembly 66b is shown as having one or more sand control screen assemblies 72 and one or more packers 70 extending from a liner or hanger 184a, with a bore 186 extending therethrough. Lower completion assembly may also include at its proximal end 188 a polished bore receptacle, such as PBR 149 shown in Figure 4.

[00067] Moreover, each lower completion assembly 66 may include an inductive coupler segment associated with the respective lower completion assembly 66. In particular, at least lower completion assembly 66b includes an inductive coupler segment 110 associated with it. In particular, inductive coupler segment 110 is deployed along lower completion assembly

66b adjacent proximal end 188 for alignment with inductive coupler segment 108c as described below.

[00068] In Figure 5, deflector 94 is illustrated being conveyed into the main wellbore 12a by junction assembly 92 and coupled to a latch mechanism 93. The deflector 94 is operatively coupled to string 30 via a junction assembly 92 and the stinger 172 to facilitate installation of the deflector 94. Once installed in the well 12, the junction assembly 92 may be configured to provide access to lower portions 12a of the main wellbore 12 via primary leg 148 and to the lateral wellbore 12b via secondary leg 150.

[00069] The stinger 172 may include a stinger member 176 that is coupled to and extends from the secondary leg 150, a shroud 178 is positioned at a distal end of the stinger member 176, and one or more seal assemblies 170c (see also Figure 3) are arranged within the shroud 178. Likewise, the shroud 178 may be disposed around third inductive coupler segment 108c (see also Figure 3) mounted adjacent seals 170c. In some embodiments, the shroud 178 may be coupled to the deflector 94 with one or more shear pins 180 or a similar mechanical fastener. In other embodiments, the shroud 178 may be coupled to the deflector 94 using other types of mechanical or hydraulic coupling mechanisms.

[00070] As previously described, junction assembly 92 includes first, second and third inductive coupler segments 108a, 108b and 108c, either internally or externally along conduit 96. Moreover, junction assembly 92 may include a polished bore receptacle 149 at its proximal end 147 with the upper inductive coupler segment 108a (not shown in Figure 5) at the proximal end of junction assembly 92 being disposed along the polished bore receptacle 149 of junction assembly 92.

[00071] Deflector 94 is conveyed into the wellbore 12 until it engages latch mechanism 93. Once the deflector 94 is properly connected to the latch mechanism 93, the string 30 may be detached from the deflector 94 at the stinger 172 and, more particularly, at the shroud 178. This may be accomplished by placing an axial load on the stinger 172 via the string 30 and shearing the shear pin(s) 180 that connect the stinger 172 to the deflector 94. Once the shear pin(s) 180 sheared, the stinger 172 may then be free to move with respect to the deflector 94 as manipulated by axial movement of the string 30. More particularly, with the deflector 94 connected to the latch mechanism 93 and the stinger 172 detached from the deflector 94, the string 30 may be advanced downhole within the main wellbore 12 to position secondary leg 150 and the stinger 172 within the lateral wellbore 12b. The diameter of the deflector bore 128 may be smaller than a diameter of the shroud 178, whereby the stinger 172 is prevented

from entering the deflector bore 128 but the shroud 178 is instead forced to ride along deflecting surface 124 of deflector 94 and into the lateral wellbore 12b.

[00072] In one or more embodiments, any hanger 184 deployed within wellbore 12 may also include an inductive coupler segment 156 in addition to or alternatively to the inductive coupler segment 108a of junction assembly 92. In Figure 5, a hanger 184b is illustrated as supporting production casing 54.

[00073] Referring to Figure 6, the stinger 172 and the secondary leg 150 of the junction assembly 92 are depicted as positioned in the lateral wellbore 12b and engaging the lower completion assembly 66b of the lateral wellbore 12b. During deployment, the shroud 178 of stinger 172 engages the lower completion assembly 66b. In one or more embodiments, the diameter of the shroud 178 may be greater than a diameter of the bore 186 and, as a result, the shroud 178 may be prevented from entering the lower completion assembly 66. Upon engaging the lower completion assembly 66, , weight may then be applied to the stinger 172 via the string 30, which may result in the shroud 178 detaching from the distal end of the stinger member 176. In some embodiments, for instance, one or more shear pins or other shearable devices (not shown) may be used to couple the shroud 178 to the distal end of the stinger member 176, and the applied axial load may surpass a shear limit of the shear pins, thereby releasing the shroud 178 from the stinger member 176. It will be appreciated that while a shroud 178 is described herein as a mechanism for protecting seal assemblies 170 and inductive coupler segment 108c during deployment, the disclosure is not limited to configurations with a shroud 178, and thus, in other embodiments, shroud 178 may be eliminated.

[00074] With the shroud 178 released from the stinger member 176, the string 30 may be advanced further such that the shroud 178 slides along the outer surface of the stinger member 176 as the stinger member 176 advances into the lower completion assembly 66 where the stinger seals 170 sealingly engage the inner wall of bore 186 and the third inductive coupler segment 108c carried on stinger 176 is generally aligned with an inductive coupler segment 110 carried on the lower completion assembly 66. With the stinger seals 170 sealed within bore 186, fluid communication may be facilitated through the lateral wellbore 12b, including through the various components of lower completion assembly 66.

[00075] Notably, advancing the string 30 downhole within the main wellbore 12 also advances the primary leg 148 until locating and being received within the deflector bore 128. The seal assembly 134 in the deflector bore 128 sealingly engages the outer surface of the primary leg 148 and the second inductive coupler segment 108b carried on primary leg 64 of

junction assembly 92 is positioned adjacent an inductive coupler segment 136 of deflector 94.

[00076] When deployed as described herein, the unitary junction assembly 92 permits power and/or data signals to be transmitted to locations in both the main wellbore 12a below the intersection 64 and the lateral wellbore 12b. Such an arrangement is particularly desirable because it eliminates the need to overcome multiple separate wellbore components traditionally installed at an intersection 64 between wellbores 12a, 12b.

[00077] Turning to Figures 7 and 8, another embodiment of junction assembly 92 comprising a rigid conduit 95 is illustrated. In embodiments of junction assembly 92 having a rigid conduit 95, junction assembly 92 is preferably multi-bore. Thus, in the illustrated embodiments, junction assembly 92 takes the form of a dual bore deflector that has dual bores and is secured to and extends upwardly from the latch mechanism 93 shown in Figure 1. Conduit 95 is general characterized as extending along a primary axis or centerline 192 and having a first end 194.

[00078] More specifically, conduit 95 may have at its first end 194 a sleeve 198, the upper edge of which may include a guide surface 200. In one or more embodiments, guide surface 200 may be helical in shape. At the lower end of the sleeve 198 is a plate or wall 202 which is generally arranged to be normal to the centerline 192 of conduit 95 so as to form a rigid conduit junction 146. The wall 202 has two adjacent openings 204 and 206 extending through it. The openings 204 and 206 may be offset in opposite directions from the centerline 192, so that the centerline 192 generally extends through a portion of the wall 202 which is disposed between the openings 204 and 206.

[00079] The junction assembly 92 has, immediately below the wall 202 forming the rigid conduit junction 146, two adjacent legs or passageways 208 and 210 formed in conduit 95 and extending from wall 202, where each leg or passageway 208, 210 opens into the sleeve 198 through a respective one of the openings 204 and 206. The passageways 208 and 210 are radially offset from the centerline 192, and a wall 212 is provided between them. Leg or passageway 208 may be characterized as a primary leg and is in fluid communication with lower main wellbore 12a when deployed in a wellbore 12 via a first lower opening 209, while leg or passageway 210 may be characterized as a secondary or lateral leg and is in fluid communication with lateral wellbore 12b via a second lower opening 218 when deployed in a wellbore 12 and engaged with a latch mechanism 93 (see Figure 1.) The junction assembly 92 also includes an elongate tube 214 defining a passageway 216 that is aligned with and

communicates with the passageway 208 so as to extend the length of primary leg or passageway 208.

[00080] Elongated tube 214 may be fixedly secured or formed in the conduit 95 so that the centerline of elongated tube 214 is radially offset from the axis 192 of conduit 95. Elongate tube 214, and thus, passageway 216, has a gradual incline or deviation with respect to the primary axis 192, so that the passageway 216 extends downwardly and inwardly toward the primary axis 192.

[00081] As set forth above, conduit 95 of the junction assembly 92 has in one side thereof a second lower aperture 218 forming a window, which is vertically and rotationally aligned with the window 92 (? 92 is junction assembly) of casing 54 when junction assembly 92 is secured to latch mechanism 93. The conduit 95 has an upwardly facing deflector surface 220 formed along the conduit 95, the deflector surface 220 being spaced apart from, but facing the lower aperture 218 so as to extend upwardly and inwardly relative to the lower edge of the lower aperture 218, preferably at an acute angle with axis 192 so as to define a gradual incline with respect to the primary axis 192. The deflector surface 220 which may be a concave groove that progressively tapers in width and depth in a downward direction. In other embodiments, the groove may have other concave cross-sectional shapes, such as a semicircular cross-sectional shape.

[00082] Although junction assembly 92 having a rigid conduit 95 may have the particular configuration as described above, it will be appreciated that the junction assembly 92 of the disclosure, in other embodiments, need not be limited to the particular configuration described above and that the foregoing is for illustrative purposes only.

[00083] In any event, for any of the junction assembly 92, an upper inductive coupler segment 221 is carried on conduit 95, preferably positioned along or in the vicinity of passageway 208 of conduit 95, while a lower inductive coupler segment 223 is carried on conduit 95 at a location spaced apart from upper inductive coupler 221, such location preferably along or at second end 196 of conduit 95 (see Figure 7b). One or both of inductive coupler segments 221, 223 may be mounted either internally within conduit 95 or along the exterior of conduit 95. A cable 100 may electrically connect the inductive coupler segments 221, 223.

[00084] With reference to Figure 9a and ongoing reference to Figures 7 and 8, junction assembly 92 in the form of deflector 94 is disposed for receipt of two tubing strings 222 and 224. In one or more embodiments, tubing strings 222 and 224 extend down from an upper completion assembly 86 upstream of deflector 94. In one or more embodiments, the tubing

strings 222 and 224 may extend from the surface 16 (not shown), directly or through a dual bore packer 88.

[00085] In one or more embodiments, a vector or junction block 226 may be positioned upstream of deflector 94, either as part of an upper completion assembly 86 or separately therefrom. In one or more embodiments, the junction assembly 92 comprises the vector block 226. In any event,, tubing strings 222 and 224 may extend downward from vector or junction block 226. Vector or junction block 226 may be utilized to comingle flow streams from the lateral wellbore 12b and the main wellbore 12a. In one or more embodiments, vector or junction block 226 is formed of a tubular 227 having a first upper aperture 229, a first lower aperture 231 and a second lower aperture 233. In one or more embodiments, a first flowbore 235 through tubular 227 interconnects first upper aperture 229 with first lower aperture 231 and a second flowbore 236 through tubular 227 interconnects first upper aperture 229 with second lower aperture 233 so that flow through the first and second lower apertures 231, 233 is comingled in junction block 226. In other embodiments, junction block 226 includes a second upper aperture 238 as shown in Figure 9b. In these embodiments, first flowbore 235 interconnects first upper aperture 229 with first lower aperture 231 and second flowbore 236 interconnects second upper aperture 238 with second lower aperture 233 so that flow through the first and second lower apertures 231, 233 remains segregated. String 30 from the surface or otherwise upstream of block 226 may be in fluid communication with first upper aperture 229 as shown.

[00086] It will be appreciated that junction block 226 as shown in Figure 9b may include seal assemblies 170 in which case junction block 226 functions as a dual bore packer. Alternatively, junction block 226 may be used in combination with a mono bore packer (such as packer 88 in Figure 1). Junction block 226 may also be supported in tubing string 222 by a liner hanger or similar mechanism 184. In any event, the dual bore packer or the junction block 226, as the case may be, is releasably secured within the casing 54 of wellbore 12 and resists both upward and downward movement of the tubing string 222, and the tubing string 222 in turn resists upward movement of the junction assembly 92.

[00087] Each tubing string 222, 224 carries at its distal end an inductive coupler segment, and may also carry a seal assembly. As illustrated, inductive coupler segment 230 is positioned along tubing string 224, preferably at its distal end. A seal assembly 228 may be positioned adjacent the inductive coupler segment 230. Likewise, tubing string 222 includes an inductive coupler segment 234 at its distal end with a seal assembly 232 positioned adjacent the inductive coupler segment 234. In one or more preferred embodiments, one or

both seal assemblies 228, 232 may be located upstream of the respective inductive coupler segments 230, 234, while in other embodiments, the respective inductive coupler segments 230, 234 are positioned between the seal assemblies 228, 232 and the end of the respective tubing string 224, 222. In the case of both inductive coupler segments 230, 234, a cable 100 or 104 may extend uphole for direct or indirect communication with the surface 16. In a configuration similar to the foregoing, to the extent string 30 communicates with junction block 226, string 30 may also include an inductive coupler segment 230 and a seal assembly 232.

[00088] In any event, as tubing string 222 is engaged with deflector 94, and in particular cylindrical passageway 208, seal assembly 228 sealingly engages a seal bore 211 provided within the upper end 194 of the dual bore deflector 94. The seal bore 211 communicates with elongated tube 214. When tubing string 222 is engaged with seal bore 211 as described, inductive coupler segment 230 is positioned to form an inductive coupling with upper inductive coupler segment 221 carried on conduit 95.

[00089] The tubing string 224 extends past the deflector surface 220 and out into the lateral wellbore 12b. The seal assembly 232 sealingly engages the lower completion assembly 66b in the lateral wellbore 12b. When tubing string 224 is engaged with lower completion assembly 66b as described herein, inductive coupler segment 234 is positioned to form an inductive coupling with inductive coupler segment 110 associated with lower completion assembly 66b.

[00090] Elongated tube 214 extends downwardly towards the lower portion of main wellbore 12a for engagement, either directly or indirectly via additional tubulars (such as production tubing) and equipment, with lower completion assembly 66a.

[00091] It should be appreciated that unless specifically limited in a particular embodiment, in all embodiments of the junction assemblies described herein, as well as the other components of a completion system or equipment utilized in installation of a completion assembly, the energy transfer mechanism (ETM), whether wireless or not, in each case may be mounted on the interior or exterior of the equipment on which it is disposed, depending on how the ETM will couple to other ETMs. Similarly, unless specifically limited in a particular embodiment, each ETM, whether wireless or not, may be positioned above or below a sealing mechanism, as desired for a particular deployment. Thus for example, along any given tubular, an inductive coupler coil may be positioned along an inner bore or surface of the tubular or along an outer surface of the tubular or may pass through the tubular wall between the interior and the exterior. The coil may be located adjacent a sealing mechanism

positioned along an inner bore or surface of the tubular or along an outer surface of the tubular. The coil may be located adjacent the end of the tubular or along the body of the tubular. The coil may be located above or below (upstream or downstream) a sealing mechanism. Similarly, unless specifically limited in a particular embodiment, cabling extending between wireless energy transfer mechanisms may run along the interior of the tubular or along the exterior of the tubular or may pass through the tubular wall between the interior and the exterior.

[00092] Thus, a multilateral wellbore system has been described. A multilateral wellbore system may generally a unitary junction assembly having a conduit having a first upper aperture, a first lower aperture and a second lower aperture; the first lower aperture defined at the distal end of a primary leg extending from a conduit junction; the second lower aperture defined at the distal end of a lateral leg extending from the conduit junction, where at least one of the legs of the junction assembly is deformable; an upper energy transfer mechanism (ETM) mounted along the conduit between the first upper aperture and the conduit junction; and a lower wireless energy transfer mechanism (WETM) mounted along one of the legs between the distal end of the passageway and the upper ETM, the upper ETM in wired communication with the lower WETM. In other embodiments, a multilateral wellbore system may generally include a unitary junction assembly having a conduit having a first upper aperture, a first lower aperture and a second lower aperture; the first lower aperture defined at the distal end of a primary leg extending from a deformable conduit junction; the second lower aperture defined at the distal end of a lateral leg extending from the deformable conduit junction; a first lower wireless energy transfer mechanism (WETM) mounted on one of the legs of the junction assembly; and an upper energy transfer mechanism (ETM) mounted on the conduit between the first upper aperture and the deformable conduit junction, the upper ETM in wired communication with the first lower WETM. In other embodiments, a multilateral wellbore system may generally include a unitary junction assembly having a conduit with a first upper aperture, a first lower aperture and a second lower aperture; the first lower aperture defined at the distal end of a primary passageway formed by the conduit and extending from a conduit junction defined along the conduit; the second lower aperture defined at the distal end of a lateral passageway formed by the conduit and extending from the conduit junction; an upper energy transfer mechanism (ETM) mounted along the conduit between the first upper aperture and the conduit junction; and a lower wireless energy transfer mechanism (WETM) mounted along one of the passageways between the distal end of the passageway and the upper ETM, the upper ETM in wired communication with the

lower WETM. In other embodiments, a multilateral wellbore system may generally include a junction assembly having a conduit with a first upper aperture, a first lower aperture and a second lower aperture; the first lower aperture defined at the distal end of a primary passageway formed by the conduit and extending from a conduit junction defined along the conduit; the second lower aperture defined at the distal end of a lateral passageway formed by the conduit and extending from the conduit junction; the conduit further including an upwardly facing deflector surface formed along the conduit and opposing, but spaced apart from the second lower aperture; an upper energy transfer mechanism (ETM) mounted along the conduit; and a lower wireless energy transfer mechanism (WETM) mounted along the primary passageway of the junction assembly between the upper wireless energy transfer mechanism and the first lower aperture, the upper ETM in wired communication with the lower WETM. In other embodiments, a multilateral wellbore system may generally include a junction assembly having a conduit with a first upper aperture, a first lower aperture and a second lower aperture; the first lower aperture defined at the distal end of a primary leg extending from a conduit junction; the second lower aperture defined at the distal end of a lateral leg extending from the conduit junction; the conduit further including an upwardly facing deflector surface formed along the conduit and opposing, but spaced apart from the second lower aperture; an upper energy transfer mechanism mounted along the conduit; and a lower wireless energy transfer mechanism mounted on one of the legs of the junction assembly between the upper energy transfer mechanism and a lower aperture. In still yet other embodiments, a multilateral wellbore system may generally include a unitary junction assembly having a conduit having a first upper aperture, a first lower aperture and a second lower aperture; the first lower aperture defined at the distal end of a primary leg extending from a conduit junction; the second lower aperture defined at the distal end of a lateral leg extending from the conduit junction, where at least one of the legs of the junction assembly is deformable; a first wireless energy transfer mechanism mounted on the lateral leg of the junction assembly; and a second wireless energy transfer mechanism mounted on the primary leg of the junction assembly. In other embodiments, a multilateral wellbore system may generally include a unitary junction assembly having a conduit having a first upper aperture, a first lower aperture and a second lower aperture; the first lower aperture defined at the distal end of a primary leg extending from a deformable conduit junction; the second lower aperture defined at the distal end of a lateral leg extending from the deformable conduit junction; a wireless energy transfer mechanism mounted on the lateral leg of the junction assembly; an energy transfer mechanism mounted on the conduit between the first upper aperture and the

deformable conduit junction. In other embodiments, a multilateral wellbore system may generally include a unitary junction assembly having a conduit having a first upper aperture, a first lower aperture and a second lower aperture; the first lower aperture defined at the distal end of a primary leg extending from a conduit junction; the second lower aperture defined at the distal end of a lateral leg extending from the conduit junction, where at least one of the legs of the junction assembly is deformable; an upper energy transfer mechanism (ETM) mounted along the conduit between the first upper aperture and the conduit junction; and a lower wireless energy transfer mechanism (WETM) mounted along one of the legs between the distal end of the passageway and the upper ETM, the upper ETM in wired communication with the lower WETM. In other embodiments, a multilateral wellbore system may generally include a unitary junction assembly having a conduit having a first upper aperture, a first lower aperture and a second lower aperture; the first lower aperture defined at the distal end of a primary leg extending from a deformable conduit junction; the second lower aperture defined at the distal end of a lateral leg extending from the deformable conduit junction; a first lower wireless energy transfer mechanism (WETM) mounted on one of the legs of the junction assembly; and an upper energy transfer mechanism (ETM) mounted on the conduit between the first upper aperture and the deformable conduit junction, the upper ETM in wired communication with the first lower WETM.

[00093] For any of the foregoing, the multilateral wellbore system may include any one of the following elements, alone or in combination with each other:

[00094] at least one of the wireless energy transfer mechanisms is an inductive coupler segment.

[00095] each of the wireless energy transfer mechanisms is an inductive coupler segment.

[00096] a wireless energy transfer mechanism mounted on each leg.

[00097] at least one of the legs of the junction assembly is deformable.

[00098] each passageway comprises a leg and at least one of the legs of the junction assembly is deformable.

[00099] a completion deflector having an energy transfer mechanism mounted thereon, the completion deflector comprising a tubular formed along a primary axis and having a first end and a second end, with a contoured surface provided at the first end, the tubular further having an inner bore extending between the two ends with a seal assembly along the inner bore, the first end and the inner bore disposed for receipt of the primary leg of the junction assembly.

[000100] the energy transfer mechanism of the completion deflector is mounted in the bore between the first end and the seal assembly.

[000101] a lateral completion assembly, the lateral completion assembly comprising an energy transfer mechanism mounted thereon.

[000102] the lateral completion assembly further comprises an inner bore extending between a first end and a second end, with the energy transfer mechanism mounted about the inner bore and a seal assembly along the inner bore between the energy transfer mechanism and the second end.

[000103] the lateral completion assembly comprises a packer and the inner bore is formed in a mandrel of the packer.

[000104] the lateral completion assembly comprises a packer and a polished bore receptacle in fluid communication with the packer, and the inner bore is formed in the polished bore receptacle.

[000105] a first tubing string having a distal end with a wireless energy transfer mechanism disposed on the first tubing string adjacent the distal end, wherein the first tubing string extends into the first upper aperture of the junction assembly and through the lateral leg and seats in the lateral completion assembly so that the wireless energy transfer mechanism carried on the first tubing string is wirelessly coupled to the wireless energy transfer mechanism of the lateral completion assembly.

[000106] a first tubing string having a distal end with a wireless energy transfer mechanism disposed on the first tubing string adjacent the distal end, wherein the first tubing string is a lateral completion assembly and the ETM disposed thereon is a WETM.

[000107] a second tubing string having a distal end with a wireless energy transfer mechanism disposed on the second tubing string, wherein the second tubing string extends into the second upper aperture of the junction assembly so that the wireless energy transfer mechanism carried on the second tubing string is wirelessly coupled to the upper wireless energy transfer mechanism of the junction assembly.

[000108] an electrical device in wired communication with a energy transfer mechanism of the lateral completion assembly, the electrical device selected from the group consisting of sensors, flow control valves, controllers and actuators.

[000109] the electrical device selected from the group consisting of sensors, actuators, computers, (micro) processors, logic devices, flow control valves, valves, digital infrastructure, optical fiber, Intelligent Inflow Control Devices (ICDs), seismic sensors, vibration inducers and vibration sensors.

[000110] the energy transfer mechanism comprises an inductive coupler coil

[000111] the energy transfer mechanisms comprises an inductive coupler segment.

[000112] the lateral leg is defined along an axis, the system further comprising a deflector surface formed along the lateral leg axis and opposing, but spaced apart from the second lower aperture.

[000113] a first tubing string having a distal end with a wireless energy transfer mechanism disposed on the first tubing string, wherein the first tubing string extends through a portion of the junction assembly and protrudes from the second lower aperture of the second lateral leg; and a second tubing string having a distal end with a wireless energy transfer mechanism disposed on the second tubing string, wherein the second tubing string extends into the first upper aperture of the junction assembly so that the wireless energy transfer mechanism carried on the second tubing string is wirelessly coupled to both of the wireless energy transfer mechanisms of the junction assembly.

[000114] a lateral completion assembly, the lateral completion assembly comprising an energy transfer mechanism mounted thereon.

[000115] the lateral completion assembly further comprises an inner bore extending between a first end and a second end, with the energy transfer mechanism mounted about the inner bore and a seal assembly along the inner bore between the energy transfer mechanism and the second end, wherein the first tubing string extends into the first upper aperture of the junction assembly so that the wireless energy transfer mechanism carried on the first tubing string is wirelessly coupled to the wireless energy transfer mechanism of the lateral completion assembly.

[000116] the lateral completion assembly comprises a packer and the inner bore is formed in a mandrel of the packer.

[000117] the lateral completion assembly comprises a packer and a polished bore receptacle in fluid communication with the packer, and the inner bore is formed in the polished bore receptacle.

[000118] an electrical device in wired communication with an energy transfer mechanism of the lateral completion assembly, the electrical device selected from the group consisting of sensors, valves, controllers and actuators.

[000119] the upper wireless energy transfer mechanism mounted adjacent the first upper aperture is carried on the conduit between the first upper aperture and the conduit junction.

[000120] the upper wireless energy transfer mechanism mounted adjacent the first upper aperture is carried on a liner hanger upstream of the first upper aperture.

[000121] the upper wireless energy transfer mechanism mounted adjacent the first upper aperture is carried on a polished bore receptacle upstream of the first upper aperture.

[000122] the lateral completion assembly further comprises an inner bore extending between a first end and a second end, with the energy transfer mechanism mounted along the inner bore, the first end and the inner bore disposed for receipt of the lateral leg of the junction assembly.

[000123] a seal assembly mounted along the inner bore of the lateral completion assembly, between the energy transfer mechanism and the second end of the inner bore.

[000124] the seal assembly comprises an elastomeric seal.

[000125] the seal assembly comprises a sealing surface.

[000126] the primary passageway comprises a primary leg, the system further comprising a completion deflector having a WETM mounted thereon, the completion deflector comprising a tubular formed along a primary axis and having a first end and a second end, with a contoured surface provided at the first end, the tubular further having an inner bore extending between the two ends with a sealing device along the inner bore, the first end and the inner bore disposed for receipt of the primary leg of the unitary junction assembly.

[000127] the WETM of the completion deflector is mounted in the bore between the first end and the sealing device.

[000128] a completion deflector having an energy transfer mechanism mounted thereon, the completion deflector comprising a tubular formed along a primary axis and having a first end and a second end, with a contoured surface provided at the first end, the tubular further having an inner bore extending between the two ends, the first end and the inner bore disposed for receipt of the primary leg of the junction assembly.

[000129] the energy transfer mechanism of the completion deflector is mounted in the bore between the first end and the second end.

[000130] the lateral completion assembly comprises a packer and a polished bore receptacle in fluid communication with the packer, and the inner bore is formed in the polished bore receptacle and the WETM of the lateral completion assembly is mounted along the inner bore of the polished bore receptacle.

[000131] a lower ETM mounted along the other leg between the conduit junction and the lower aperture of said leg, the upper ETM in wired communication with the lower ETM.

[000132] the lateral leg comprises a lateral stinger having a stinger member, one or more stinger seals positioned adjacent the energy transfer mechanism and a shroud arranged about the energy transfer mechanism and seal.

[000133] a completion deflector having an energy transfer mechanism mounted thereon, the completion deflector comprising a tubular formed along a primary axis and having a first end and a second end, with a contoured surface provided at the first end, the tubular further having an inner bore extending between the two ends with a sealable surface formed within the inner bore, the first end and the inner bore disposed for receipt of the primary leg of the junction assembly, wherein the energy transfer mechanism of the completion deflector is mounted in the bore between the first end and the seal assembly.

[000134] the unitary junction assembly is selected from the group consisting of a dual bore deflector; a vector block; a deformable junction; a dual packer; a vector block and monobore packer combination; and a flexible junction and liner hanger combination.

CLAIMS

WHAT IS CLAIMED IS:

1. A multilateral wellbore system comprising:

a unitary junction assembly having a conduit with a first upper aperture, a first lower aperture and a second lower aperture;

the first lower aperture defined at the distal end of a primary passageway formed by the conduit and extending from a conduit junction defined along the conduit;

the second lower aperture defined at the distal end of a lateral passageway formed by the conduit and extending from the conduit junction;

an upper energy transfer mechanism (ETM) mounted along the conduit between the first upper aperture and the conduit junction ; and

a lower wireless energy transfer mechanism (WETM) mounted along one of the passageways between the distal end of the passageway and the upper ETM, the upper ETM in wired communication with the lower WETM.

2. The system of claim 1, wherein the unitary junction assembly is selected from the group consisting of a dual bore deflector;

a vector block;

a deformable junction; a dual packer;

a vector block and monobore packer combination; and

a flexible junction and liner hanger combination.

3. The system of claim 1, wherein at least one WETM is an inductive coupler segment.

4. The system of claim 1, wherein each passageway comprises a leg and at least one of the legs of the junction assembly is deformable.

5. The system of claim 1, further comprising a lower WETM mounted along each passageway.

6. The system of claim 1, wherein the upper ETM is a WETM.

7. The system of claim 1, wherein at least one of the ETMs is powered from an energy source selected from the group consisting of electricity, electromagnetism, magnetism, sound, motion, vibration, Piezoelectric crystals, motion of conductor/coil, ultrasound, incoherent light, coherent light, temperature, radiation, electromagnetic transmissions, and pressure (hydraulics).

8. The system of claim 1, further comprising an electrical device in wired communication with an ETM, the electrical device selected from the group consisting of sensors, flow control valves, controllers, WETMs, ETMs, contact electrical connectors, electrical power storage device, computer memory, and logic devices.

9. The system of claim 1, further comprising a first tubing string having a distal end with an ETM disposed on the first tubing string, wherein the first tubing string engages the unitary junction assembly so that the ETM of the first tubing string is adjacent an ETM of the unitary junction assembly.

10. The system of claim 9, wherein the first tubing string is a lateral completion assembly and the ETM disposed thereon is a WETM.

11. The system of claim 1, wherein the primary passageway comprises a primary leg, the system further comprising a completion deflector having a WETM mounted thereon, the completion deflector comprising a tubular formed along a primary axis and having a first end and a second end, with a contoured surface provided at the first end, the tubular further having an inner bore extending between the two ends with a sealing device along the inner bore, the first end and the inner bore disposed for receipt of the primary leg of the unitary junction assembly.

12. The system of claim 11, wherein the WETM of the completion deflector is mounted in the bore between the first end and the sealing device.

13. The system of claim 10, wherein the lateral completion assembly further comprises an inner bore extending between a first end and a second end, with the WETM mounted about the inner bore and a sealing device along the inner bore between the WETM and the second end.

14. The system of claim 10, wherein the lateral completion assembly comprises a packer and the inner bore is formed in a mandrel of the packer and the WETM of the lateral completion assembly is mounted along the mandrel of the packer.

15. The system of claim 10, wherein the lateral completion assembly comprises a packer and a polished bore receptacle in fluid communication with the packer, and the inner bore is formed in the polished bore receptacle and the WETM of the lateral completion assembly is mounted along the inner bore of the polished bore receptacle.

16. The system of claim 10, further comprising an electrical device in wired communication with a WETM of the lateral completion assembly, the electrical device selected from the group consisting of sensors, flow control valves, controllers, WETMs, ETMs, contact electrical connectors, actuators, electrical power storage device, computer memory, and logic devices.

17. A multilateral wellbore system comprising:

a junction assembly having a conduit with a first upper aperture, a first lower aperture and a second lower aperture;

the first lower aperture defined at the distal end of a primary passageway formed by the conduit and extending from a conduit junction defined along the conduit;

the second lower aperture defined at the distal end of a lateral passageway formed by the conduit and extending from the conduit junction;

the conduit further including an upwardly facing deflector surface formed along the conduit and opposing, but spaced apart from the second lower aperture;

an upper energy transfer mechanism (ETM) mounted along the conduit; and

a lower wireless energy transfer mechanism (WETM) mounted along the primary passageway of the junction assembly between the upper wireless energy transfer mechanism and the first lower aperture, the upper ETM in wired communication with the lower WETM.

18. The system of claim17, further comprising a first tubing string having a distal end with a WETM disposed on the first tubing string, wherein the first tubing string extends through a portion of the junction assembly and protrudes from the second lower aperture of

the lateral passage and engages a lateral completion assembly having a WETM mounted thereon, the first tubing string engaging the lateral completion assembly so that the WETM carried thereon is wirelessly coupled to the WETM of the first tubing string; and a second tubing string having a distal end with a WETM disposed on the second tubing string, wherein the second tubing string extends into the first upper aperture of the junction assembly so that the WETM carried on the second tubing string is wirelessly coupled to the upper ETM of the junction assembly.

19. The system of claim 17, wherein the WETM of the first tubing string and the WETM of the lateral completion assembly are inductive coupler segments, the system further comprising an electrical device in wired communication with a WETM of the lateral completion assembly, the electrical device selected from the group consisting of sensors, flow control valves, controllers, WETMs, ETMs, contact electrical connectors, actuators, electrical power storage device, computer memory, and logic devices.

20. The system of claim 17, further comprising a lower ETM mounted along the other passageway between the conduit junction and the lower aperture of said passageway, the upper ETM in wired communication with the lower ETM.

Fig. 1a

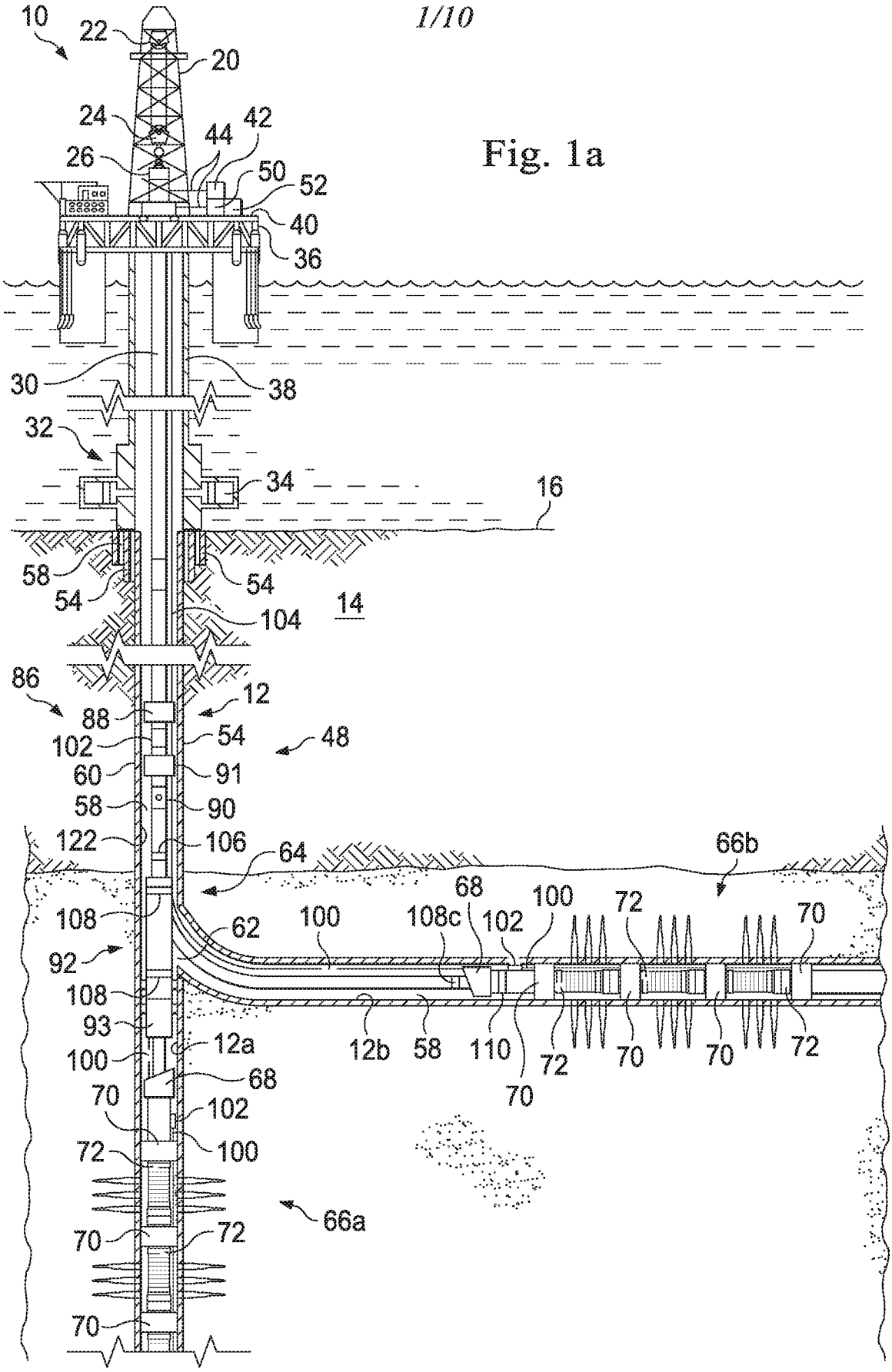
10
22
20
24
42
44
26
50
52
40
36
30
38
32
34
16
58
54
54
14
104
86
12
88
54
48
102
60
91
58
90
122
106
64
66b
68
108
62
100
108c
102
100
72
70
92
108
93
12a
12b
58
110
72
70
70
72
100
68
70
102
100
72
66a
70
72
70

Fig. 1b

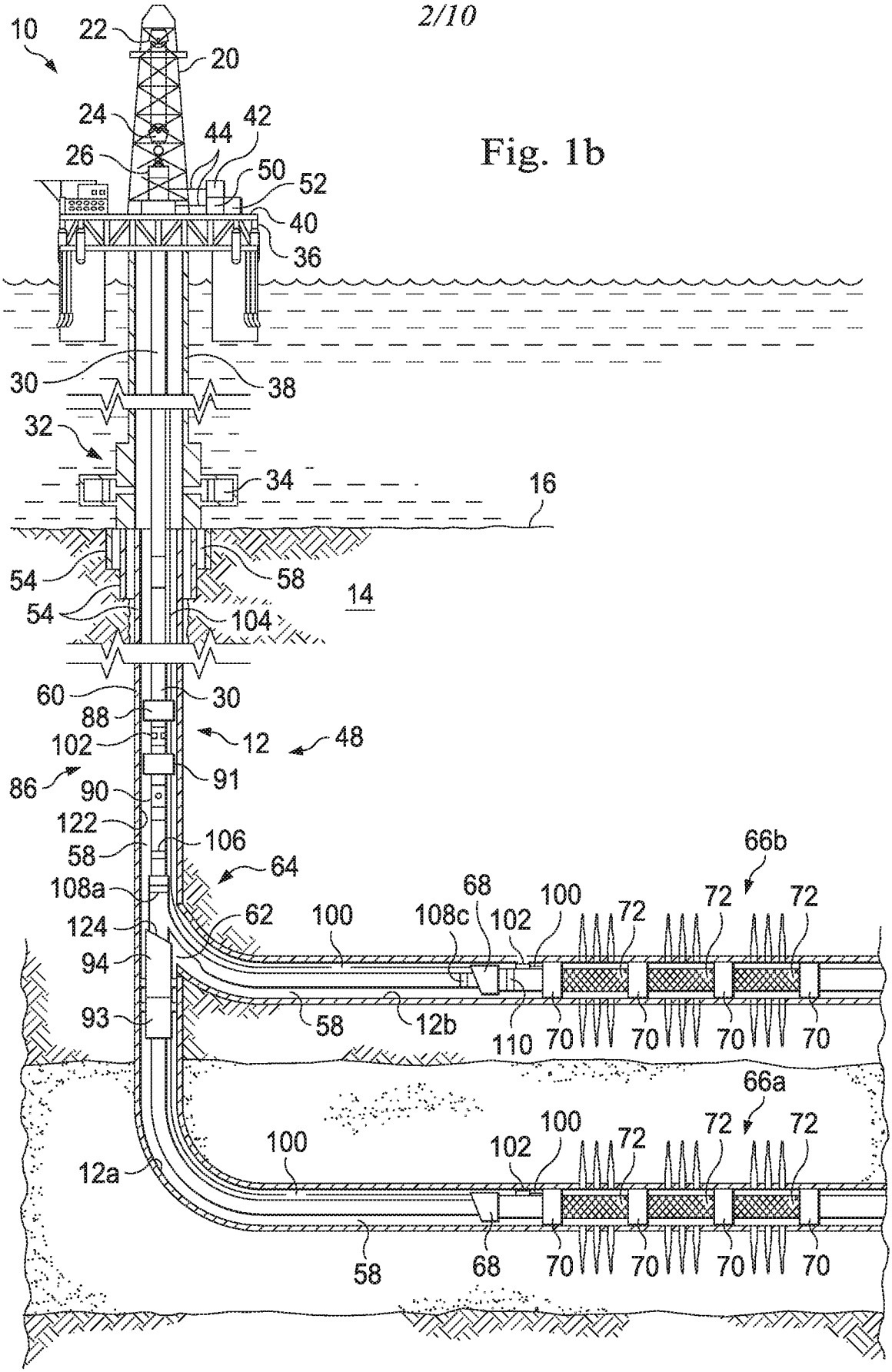
10
22
20
24
42
44
26
50
52
40
36
30
38
32
34
16
54
58
14
54
104
60
30
88
102
12
48
91
86
90
122
106
58
64
108a
62
100
108c
68
102
100
72
72
72
124
94
93
58
12b
110
70
70
70
70
66b
66a
100
102
100
72
72
72
12a
58
68
70
70
70
70

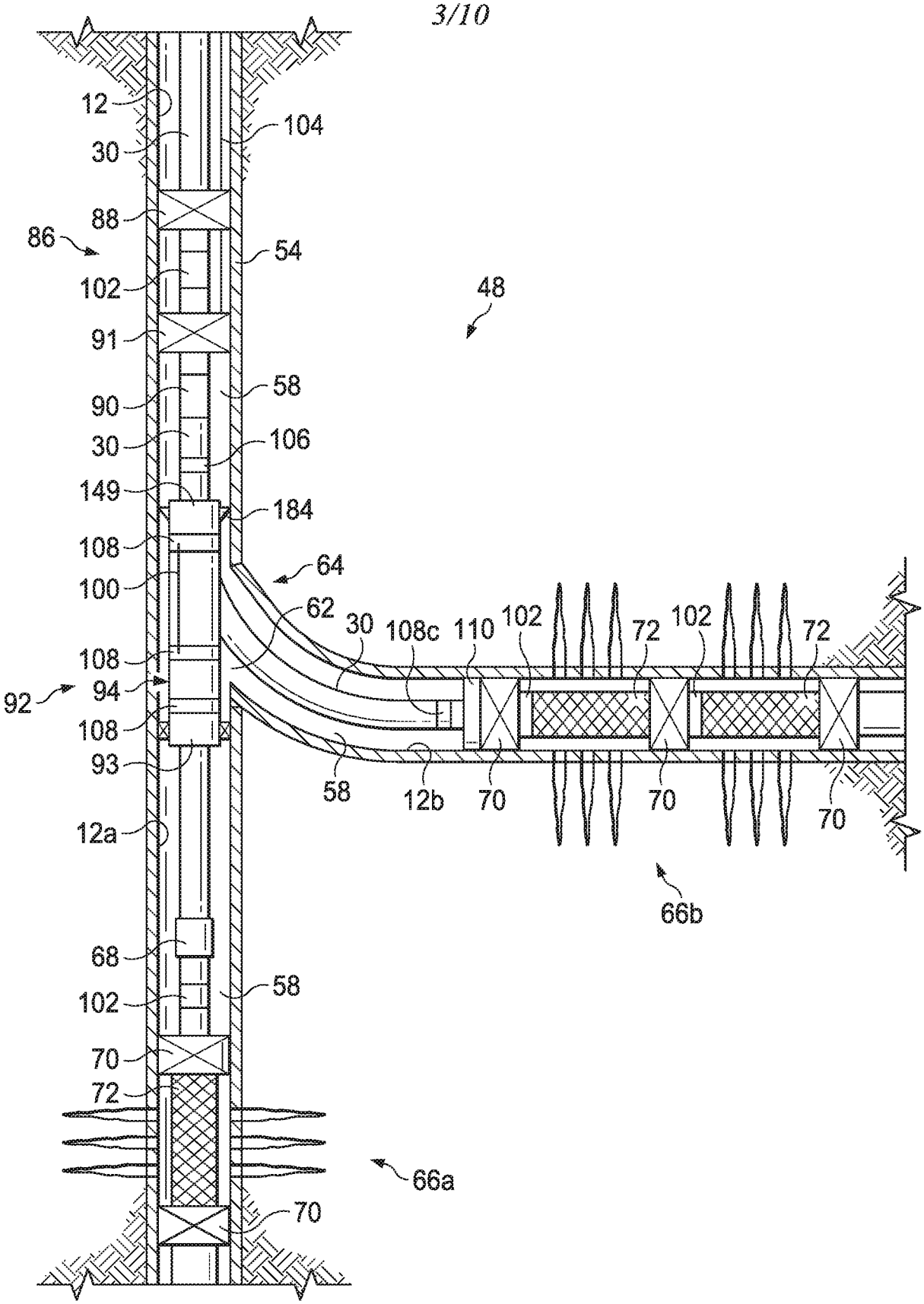
12
104
30
88
86
54
102
48
91
58
90
106
30
149
184
108
64
100
62
30
108c
110
102
72
102
72
108
92
94
108
93
58
12b
70
70
70
12a
66b
68
58
102
70
72
66a
70

Fig. 1c

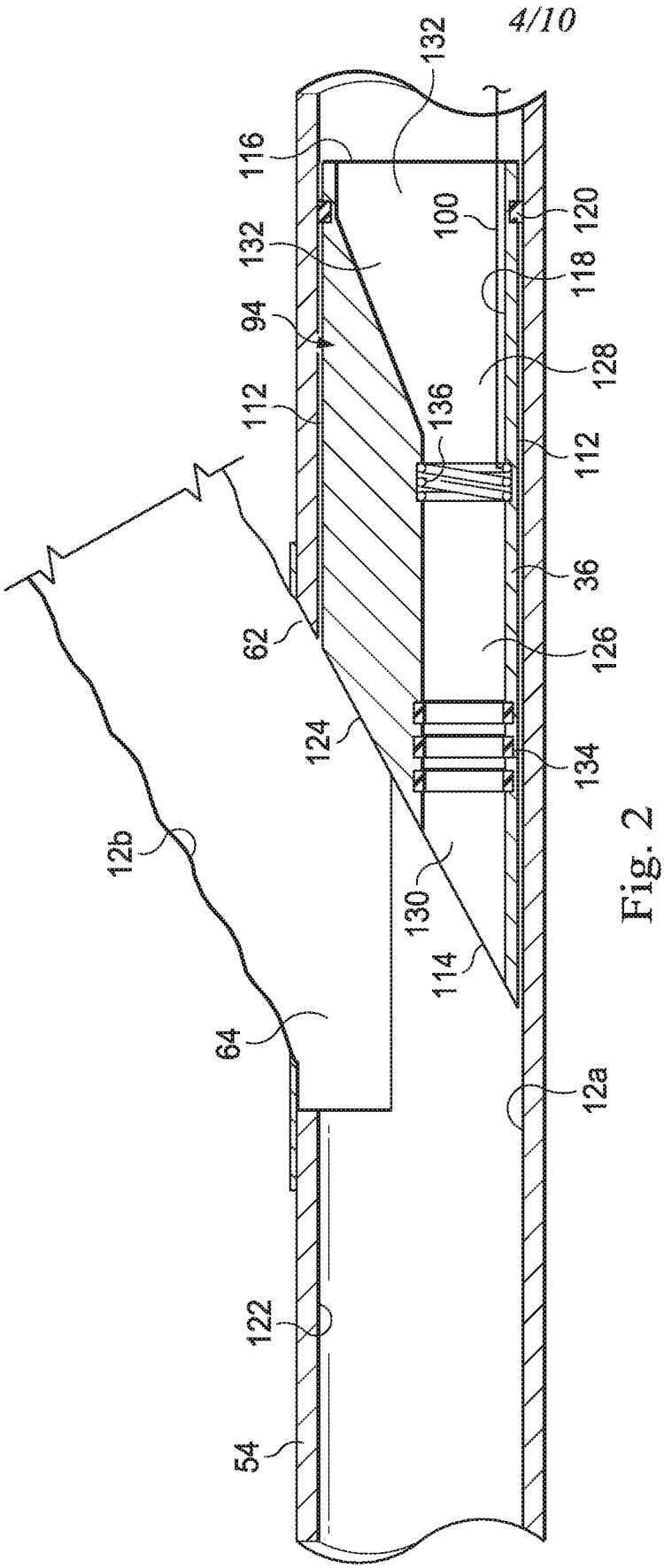
132
116
100
120
132
118
94
128
112
136
112
36
62
126
124
134
12b
130
114
64
12a
122
54

Fig. 2

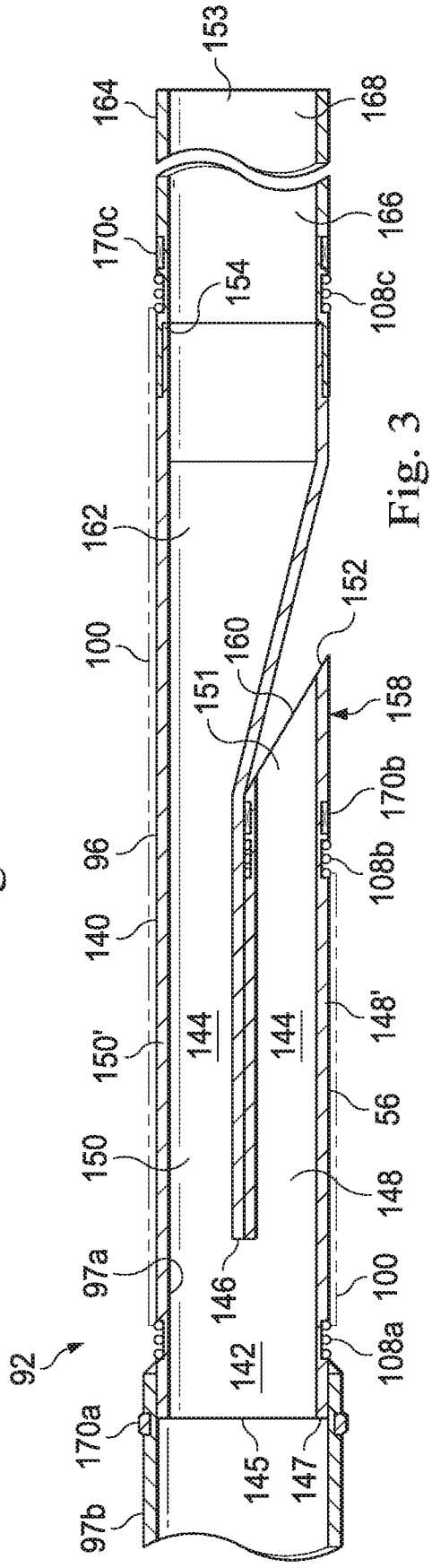
153
164
168
170c
166
154
108c
162
152
100
160
151
158
170b
96
108b
140
148'
150'
144
144
56
150
148
97a
146
100
92
142
108a
170a
145
147
97b

Fig. 3

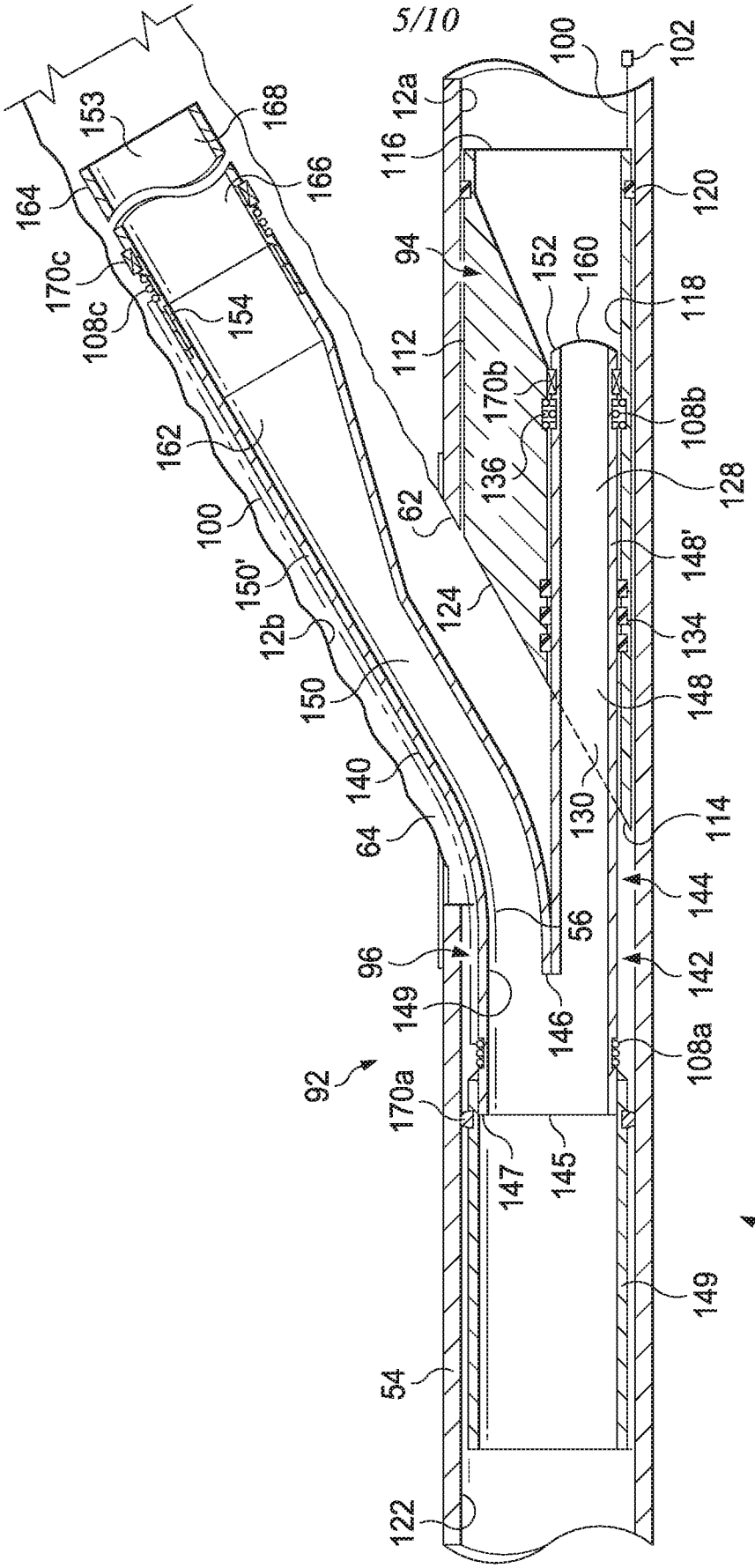
100
102
12a
116
120
94
152
160
118
112
170b
108b
136
128
62
148'
124
134
148
130
114
144
56
142
146
108a
149
92
170a
147
145
12
149
54
122
153
168
164
166
170c
108c
154
162
100
150'
12b
150
140
64
96

Fig. 4

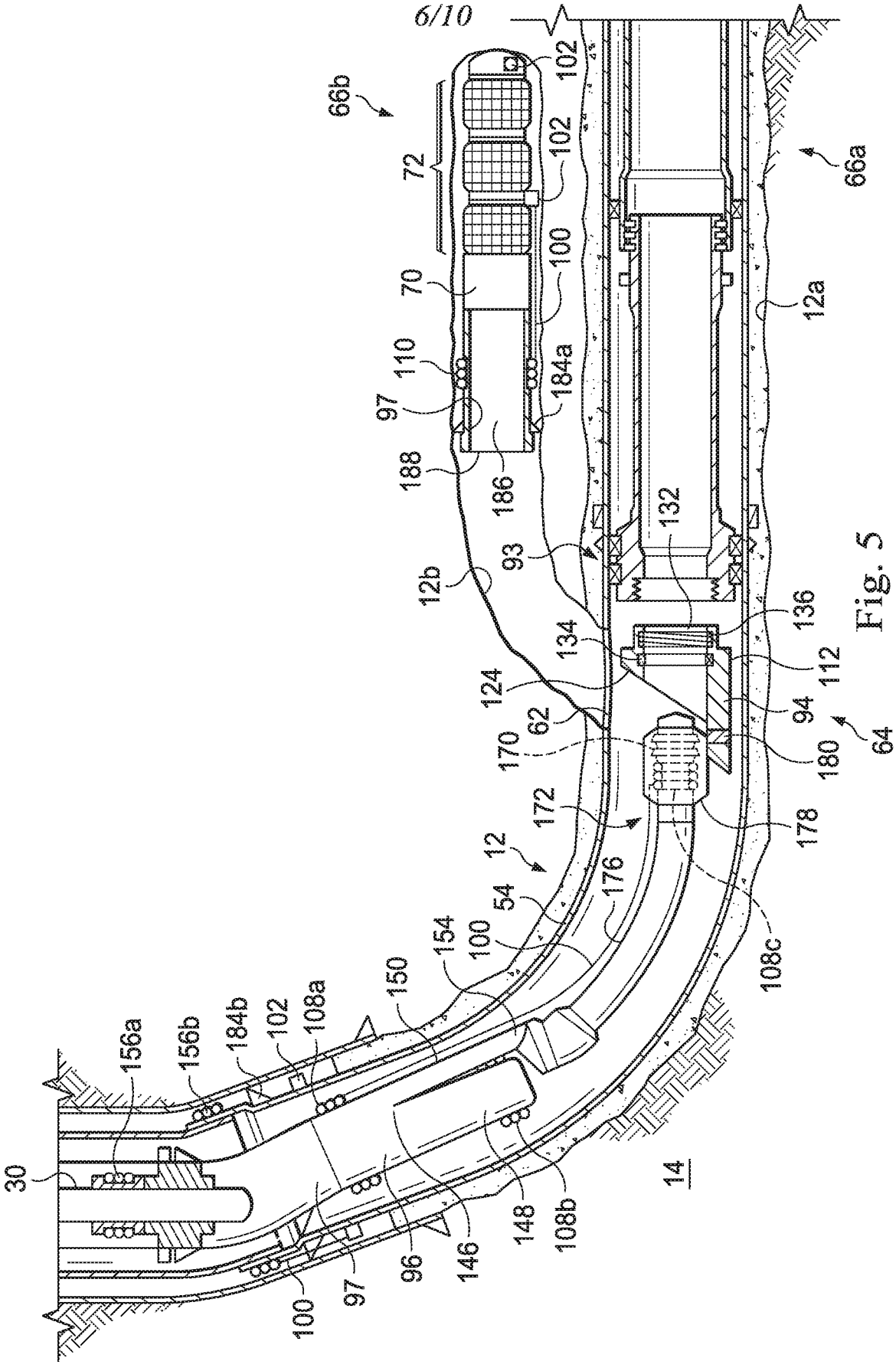
66b
72
102
102
100
70
110
97
184a
188
186
66a
12a
132
93
12b
136
134
112
124
94
62
64
170
180
172
178
12
176
54
154
100
150
108a
102
184b
156b
156a
30
14
148
108b
146
96
97
100
108c

Fig. 5

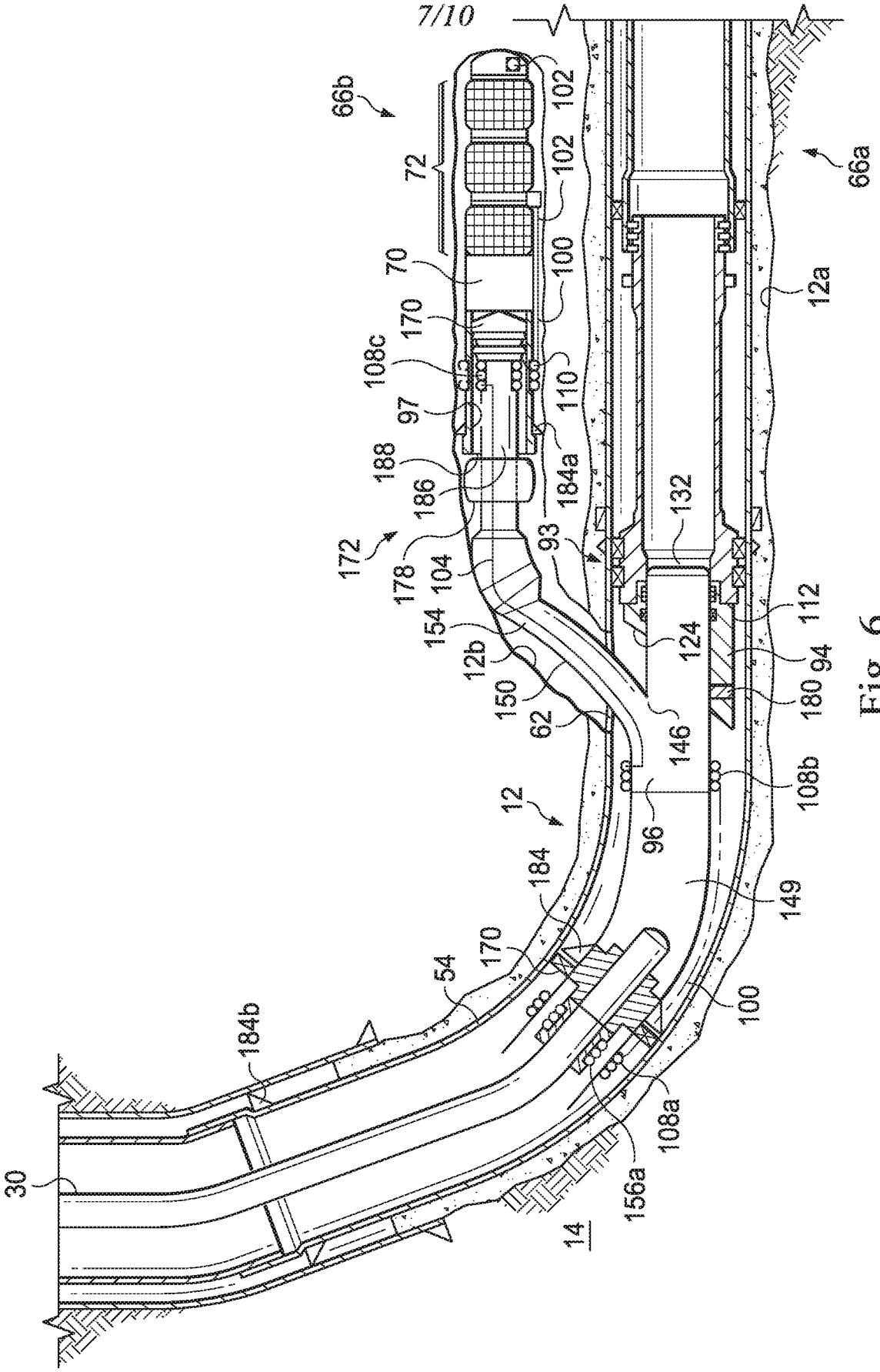
66b
72
102
102
70
100
170
108c
110
97
188
186
184a
172
178
104
93
132
154
12b
150
62
124
112
94
180
146
108b
96
12
184
149
170
54
100
184b
108a
156a
30
14
66a
12a

Fig. 6

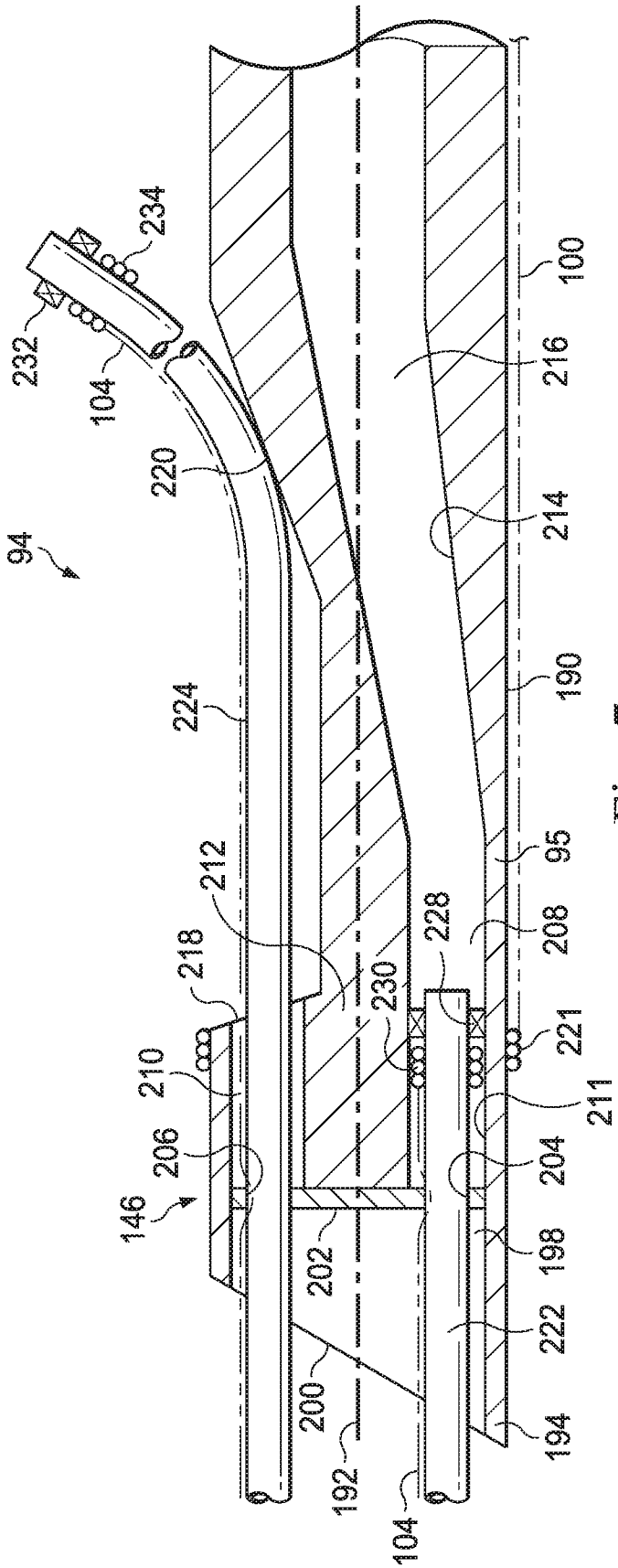
94
232
234
104
220
216
100
214
190
224
95
212
228
208
218
230
221
210
211
206
204
146
202
198
222
200
194
192
104

Fig. 7a

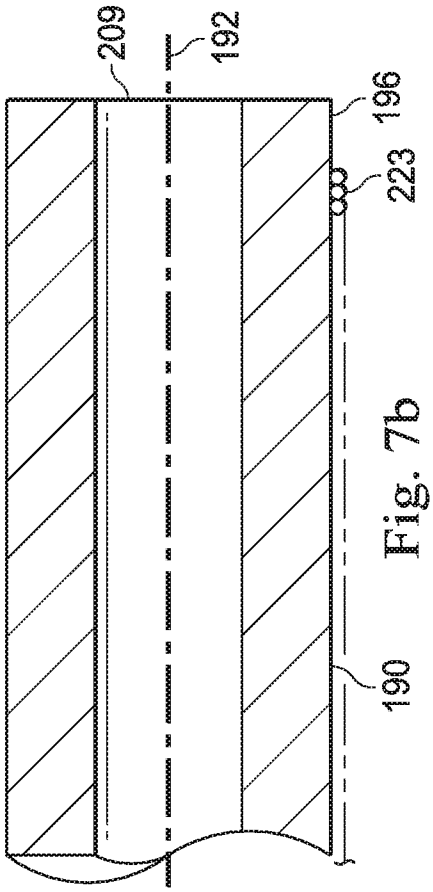
209
192
196
223
190

Fig. 7b

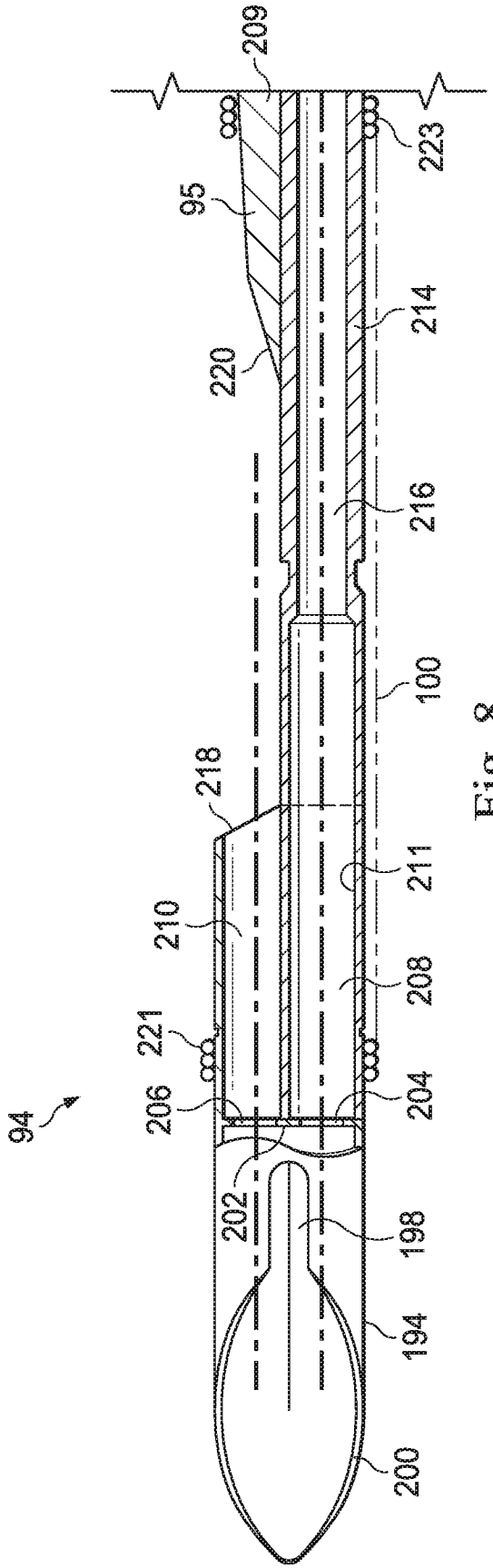
209
223
95
214
220
216
100
218
211
210
208
221
206
204
94
202
198
194
200

Fig. 8

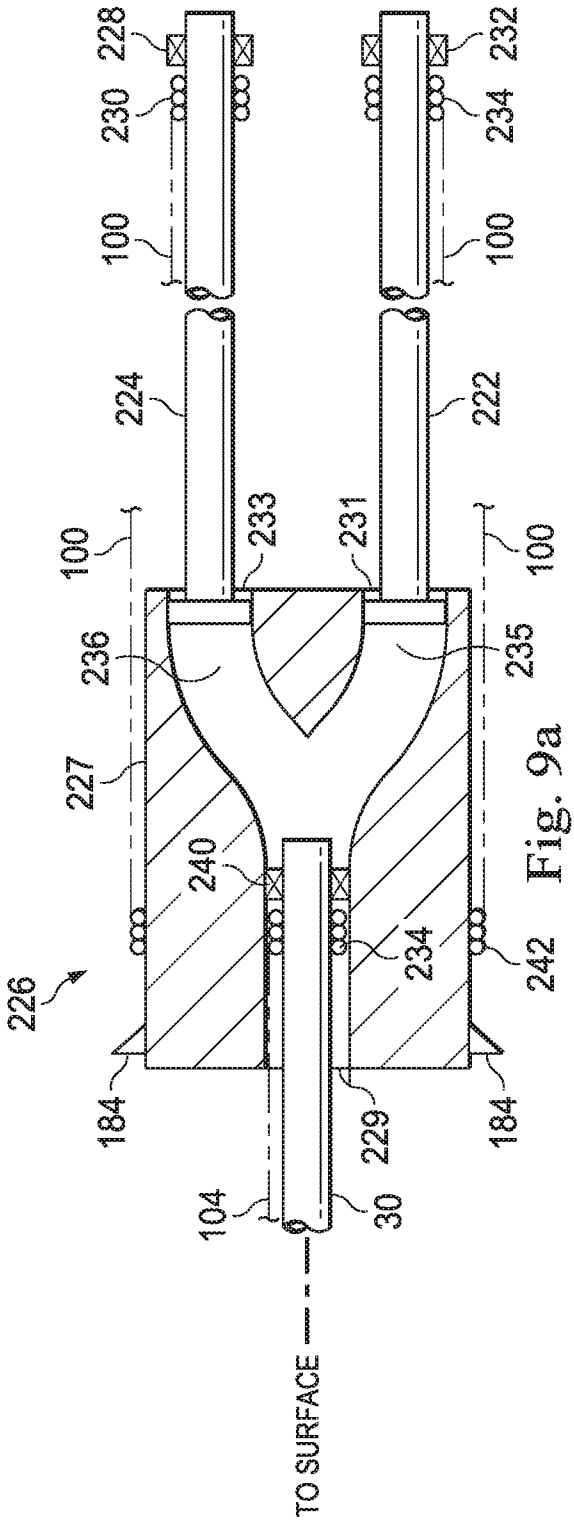
226
228
230
232
234
100
224
222
233
231
236
235
227
240
242
184
229
104
30
TO SURFACE

Fig. 9a

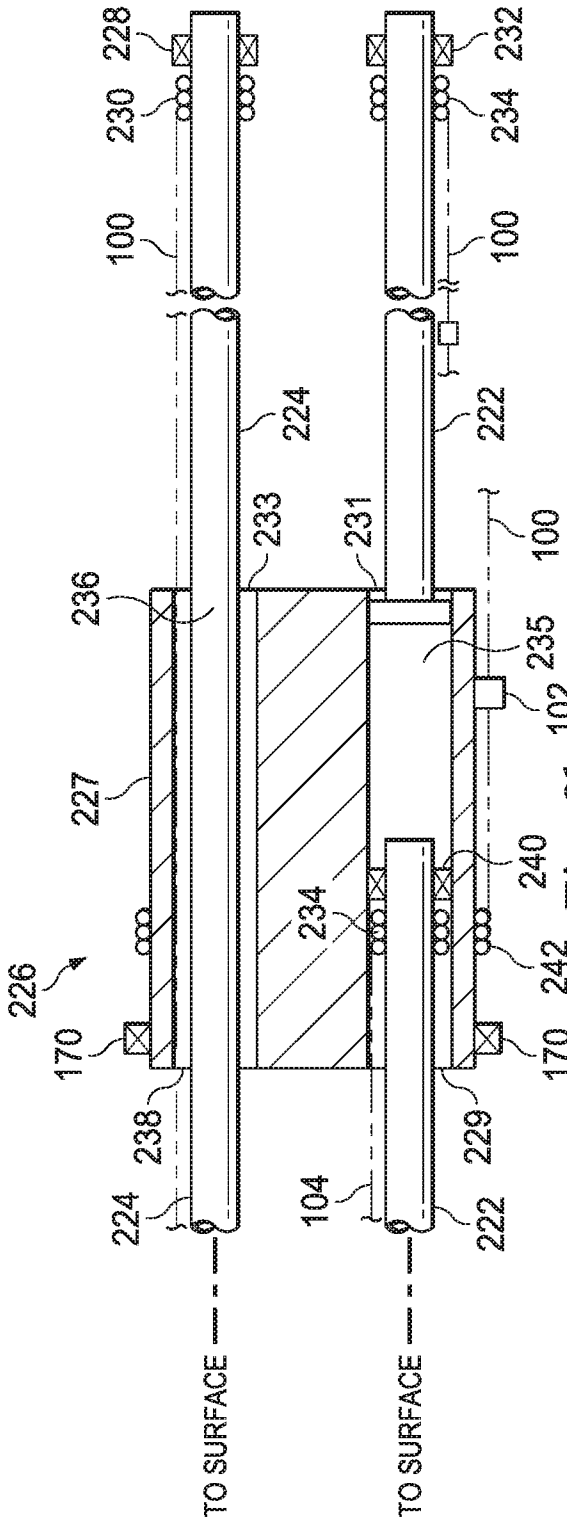
226
228
230
232
234
100
224
222
233
231
236
235
102
227
240
242
170
238
229
104
TO SURFACE

Fig. 9b

INTERNATIONAL SEARCH REPORT

International application No.
PCT/US2017/035495

A. CLASSIFICATION OF SUBJECT MATTER

E21B 41/00(2006.01)i, E21B 47/12(2006.01)i, H02J 50/00(2016.01)i

According to International Patent Classification (IPC) or to both national classification and IPC

B. FIELDS SEARCHED

Minimum documentation searched (classification system followed by classification symbols)
E21B 41/00; E21B 47/00; E21B 43/04; E21B 43/14; E21B 43/26; E21B 23/00; E21B 7/06; E03B 3/11; E21B 47/12; H02J 50/00

Documentation searched other than minimum documentation to the extent that such documents are included in the fields searched
Korean utility models and applications for utility models
Japanese utility models and applications for utility models

Electronic data base consulted during the international search (name of data base and, where practicable, search terms used)
eKOMPASS(KIPO internal) & keywords: multilateral, junction, deformable, energy transfer, inductive coupler

C. DOCUMENTS CONSIDERED TO BE RELEVANT

Category*	Citation of document, with indication, where appropriate, of the relevant passages	Relevant to claim No.
X	US 2001-0025710 A1 (OHMER et al.) 04 October 2001 See abstract, paragraphs [0030]-[0032], [0067]-[0081], and figures 1, 11-14.	1,3,5-10,13-20
Y		2,4,11,12
Y	US 6089320 A (LAGRANGE, TIMOTHY EDWARD) 18 July 2000 See column 4, lines 59-67, column 8, lines 13-47, column 10, lines 7-34, column 12, lines 30-48, and figures 5, 6, 9.	2,4,11,12
Y	US 9140102 B2 (BARTKO et al.) 22 September 2015 See column 11, lines 46-58 and figure 1.	11,12
A	US 2007-0227727 A1 (PATEL et al.) 04 October 2007 See paragraphs [0119]-[0125] and figure 21.	1-20
A	US 2013-0081807 A1 (DYER et al.) 04 April 2013 See paragraphs [0019]-[0025] and figures 1A-3D.	1-20

☐ Further documents are listed in the continuation of Box C.

☒ See patent family annex.

* Special categories of cited documents:
"A" document defining the general state of the art which is not considered to be of particular relevance
"E" earlier application or patent but published on or after the international filing date
"L" document which may throw doubts on priority claim(s) or which is cited to establish the publication date of another citation or other special reason (as specified)
"O" document referring to an oral disclosure, use, exhibition or other means
"P" document published prior to the international filing date but later than the priority date claimed
"T" later document published after the international filing date or priority date and not in conflict with the application but cited to understand the principle or theory underlying the invention
"X" document of particular relevance; the claimed invention cannot be considered novel or cannot be considered to involve an inventive step when the document is taken alone
"Y" document of particular relevance; the claimed invention cannot be considered to involve an inventive step when the document is combined with one or more other such documents,such combination being obvious to a person skilled in the art
"&" document member of the same patent family

Date of the actual completion of the international search	Date of mailing of the international search report
27 February 2018 (27.02.2018)	**27 February 2018 (27.02.2018)**

Name and mailing address of the ISA/KR
International Application Division
Korean Intellectual Property Office
189 Cheongsa-ro, Seo-gu, Daejeon, 35208, Republic of Korea
Facsimile No. +82-42-481-8578

Authorized officer
KIM, Jin Ho
Telephone No. +82-42-481-8699

INTERNATIONAL SEARCH REPORT

Information on patent family members

International application No.
PCT/US2017/035495

Patent document cited in search report	Publication date	Patent family member(s)	Publication date
US 2001-0025710 A1	04/10/2001	AU 2000-23465 A1	05/06/2000
		AU 2000-23465 B2	05/06/2003
		AU 2001-68386 A1	02/01/2002
		BR 0200507 A	08/10/2002
		BR PI0200507 B1	01/12/2015
		CA 2349223 A1	25/05/2000
		CA 2349223 C	14/11/2006
		CA 2372287 A1	20/08/2002
		CA 2410124 A1	09/05/2003
		CA 2410124 C	06/02/2007
		CA 2413794 A1	27/12/2001
		CA 2413794 C	09/10/2007
		CA 2556180 A1	25/05/2000
		CA 2556180 C	15/05/2007
		GB 2359578 A	29/08/2001
		GB 2372272 A	21/08/2002
		GB 2372272 B	27/08/2003
		GB 2381809 A	14/05/2003
		GB 2382089 A	21/05/2003
		NO 20020807 A	21/08/2002
		NO 20020807 D0	19/02/2002
		NO 334389 B1	24/02/2014
		US 2001-0035288 A1	01/11/2001
		US 2002-0112857 A1	22/08/2002
		US 2004-0094303 A1	20/05/2004
		US 6209648 B1	03/04/2001
		US 6568469 B2	27/05/2003
		US 6684952 B2	03/02/2004
		US 6863129 B2	08/03/2005
		US 7165618 B2	23/01/2007
		WO 00-29713 A2	25/05/2000
		WO 00-29713 A3	23/11/2000
		WO 01-98632 A1	27/12/2001
US 6089320 A	18/07/2000	None	
US 9140102 B2	22/09/2015	CA 2849922 A1	18/04/2013
		CA 2849922 C	10/01/2017
		CN 104011326 A	27/08/2014
		EP 2764200 A2	13/08/2014
		US 2013-0087321 A1	11/04/2013
		WO 2013-055677 A2	18/04/2013
		WO 2013-055677 A3	23/01/2014
US 2007-0227727 A1	04/10/2007	CA 2582541 A1	30/09/2007
		CA 2582541 C	17/11/2015
		EA 012821B1	30/12/2009
		EA 200700517A1	28/12/2007
		EP 2335095 A1	22/06/2011

INTERNATIONAL SEARCH REPORT

Information on patent family members

International application No.

PCT/US2017/035495

Patent document cited in search report	Publication date	Patent family member(s)	Publication date
		EP 2335095 B1	03/05/2017
		EP 2452043 A1	16/05/2012
		GB 2436579 A	03/10/2007
		GB 2436579 B	29/12/2010
		GB 2438481 A	28/11/2007
		GB 2439426 A	27/12/2007
		GB 2459390 A	28/10/2009
		MY 147744 A	15/01/2013
		NO 20071662 A	01/10/2007
		US 2007-0235185 A1	11/10/2007
		US 2007-0289779 A1	20/12/2007
		US 2007-0295504 A1	27/12/2007
		US 2008-0041576 A1	21/02/2008
		US 2008-0185144 A1	07/08/2008
		US 2008-0201080 A1	21/08/2008
		US 2009-0066535 A1	12/03/2009
		US 2009-0151935 A1	18/06/2009
		US 2009-0173493 A1	09/07/2009
		US 2010-0101786 A1	29/04/2010
		US 2010-0186953 A1	29/07/2010
		US 2010-0200291 A1	12/08/2010
		US 2010-0236774 A1	23/09/2010
		US 2010-0300678 A1	02/12/2010
		US 2011-0010096 A1	13/01/2011
		US 2011-0107834 A1	12/05/2011
		US 2012-0013482 A1	19/01/2012
		US 2012-0323494 A1	20/12/2012
		US 2014-0174714 A1	26/06/2014
		US 2015-0315895 A1	05/11/2015
		US 7712524 B2	11/05/2010
		US 7735555 B2	15/06/2010
		US 7775275 B2	17/08/2010
		US 7793718 B2	14/09/2010
		US 7836959 B2	23/11/2010
		US 7890273 B2	15/02/2011
		US 7896070 B2	01/03/2011
		US 8056619 B2	15/11/2011
		US 8082983 B2	27/12/2011
		US 8082990 B2	27/12/2011
		US 8146658 B2	03/04/2012
		US 8195398 B2	05/06/2012
		US 8235127 B2	07/08/2012
		US 8312923 B2	20/11/2012
		US 9175523 B2	03/11/2015
		WO 2008-060769 A2	22/05/2008
		WO 2008-060769 A3	10/07/2008
		WO 2009-126761 A2	15/10/2009
		WO 2009-126761 A3	30/12/2009
		WO 2010-025025 A1	04/03/2010
		WO 2011-006083 A1	13/01/2011

INTERNATIONAL SEARCH REPORT

Information on patent family members

International application No.

PCT/US2017/035495

Patent document cited in search report	Publication date	Patent family member(s)	Publication date
US 2013-0081807 A1	04/04/2013	BR 102012025237 A2	02/12/2014
		NO 20121124 A	05/04/2013
		US 9249559 B2	02/02/2016