March 9, 1965 J. R. SIDDONS 3,172,119

EXPLOSIVE-POWERED FASTENING TOOLS

Filed Sept. 5, 1962 3 Sheets-Sheet 1

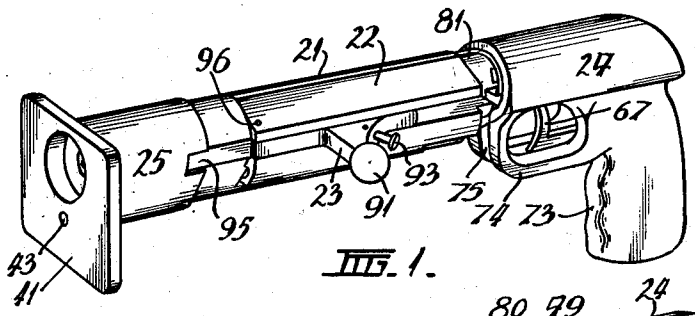

FIG. 1.

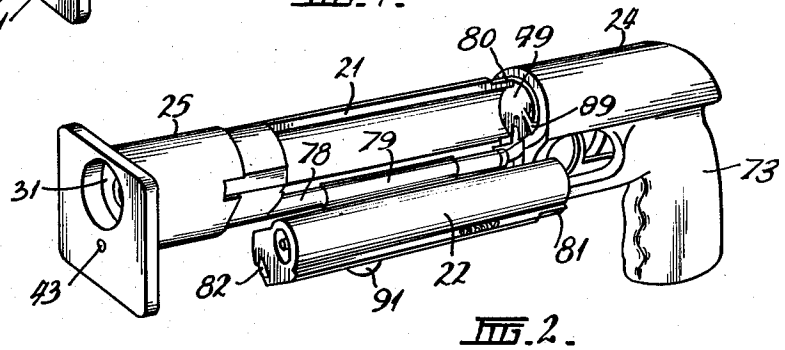

FIG. 2.

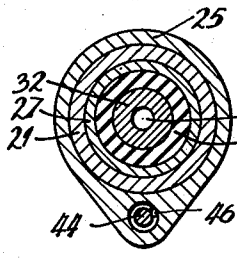

FIG. 5.

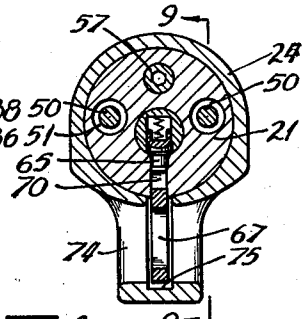

FIG. 6.

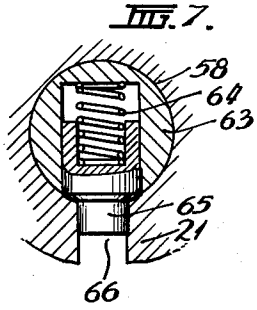

FIG. 7.

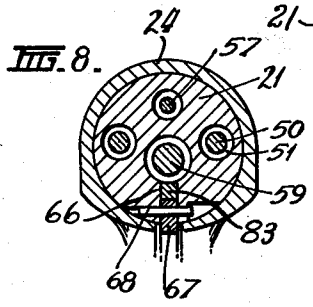

FIG. 8.

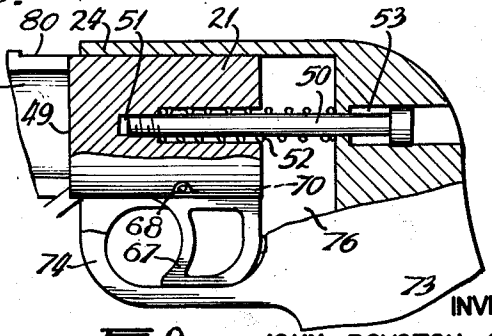

FIG. 9.

INVENTOR.
JOHN ROYSTON SIDDONS
BY
O'Brien, Marks & Donnelly
ATTORNEYS

March 9, 1965 J. R. SIDDONS 3,172,119

EXPLOSIVE-POWERED FASTENING TOOLS

Filed Sept. 5, 1962 3 Sheets-Sheet 2

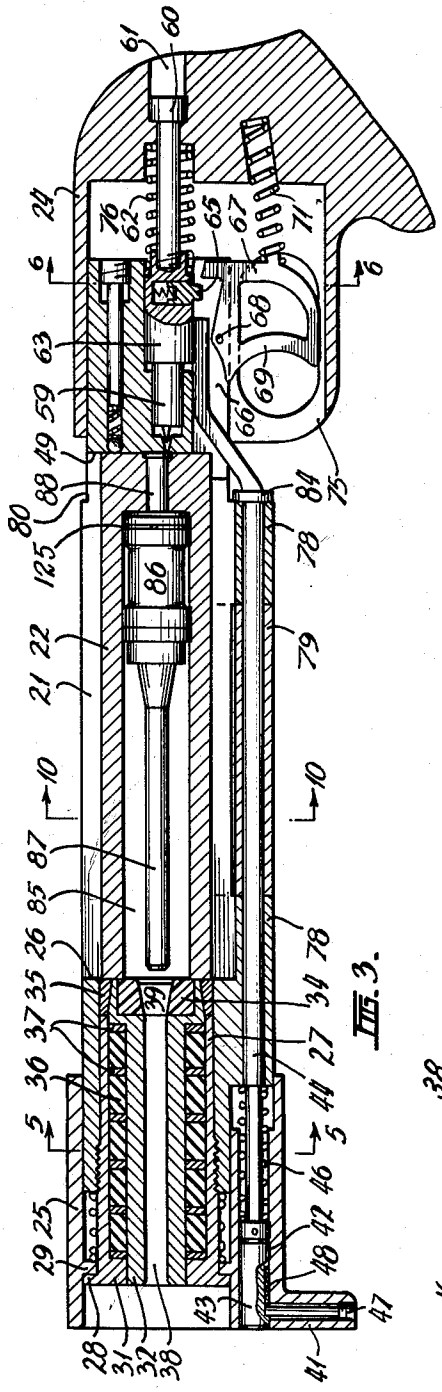

Fig. 3.

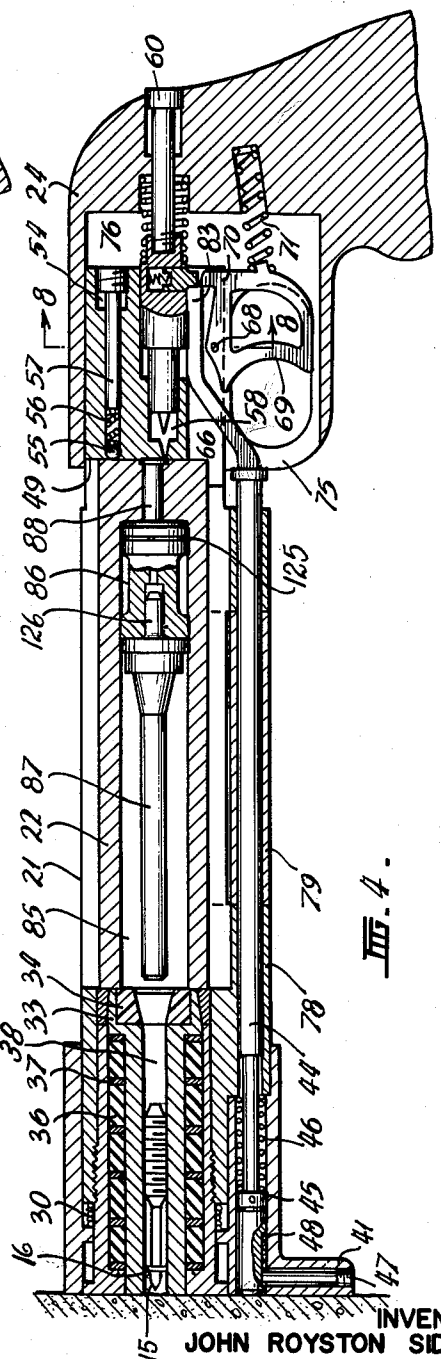

Fig. 4.

INVENTOR.
JOHN ROYSTON SIDDONS
BY
Merlin, Mahn & Donnelly
ATTORNEYS

March 9, 1965 J. R. SIDDONS 3,172,119

EXPLOSIVE-POWERED FASTENING TOOLS

Filed Sept. 5, 1962 3 Sheets-Sheet 3

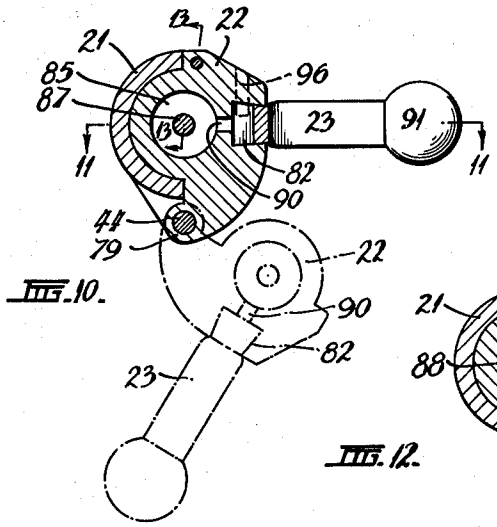

FIG. 10.

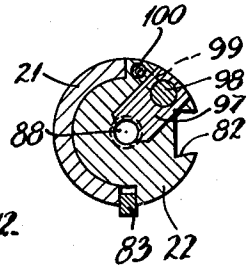

FIG. 12.

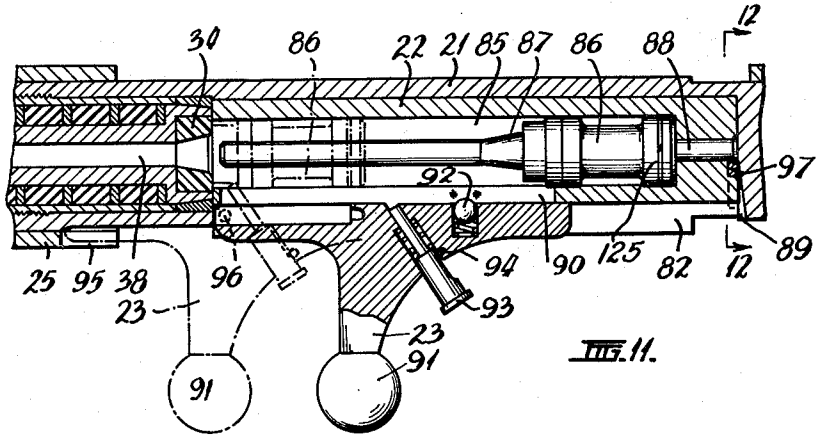

FIG. 11.

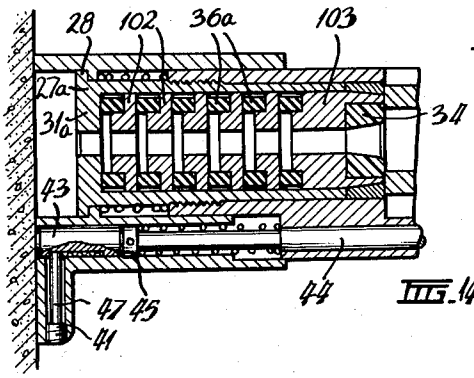

FIG. 14.

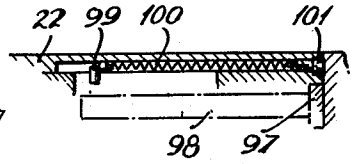

FIG. 13.

INVENTOR.
JOHN ROYSTON SIDDONS
BY
Sheldon, Mink & Donnelly
ATTORNEYS

United States Patent Office

3,172,119
Patented Mar. 9, 1965

3,172,119

EXPLOSIVE-POWERED FASTENING TOOLS

John Royston Siddons, Lower Plenty, Victoria, Australia, assignor to Olin Mathieson Chemical Corporation, New York, N.Y., a corporation of Virginia

Filed Sept. 5, 1962, Ser. No. 221,548
Claims priority, application Australia, Sept. 8, 1961, 8,996/61
15 Claims. (Cl. 1—44.5)

This invention relates to explosive powered fastening tools, that is to say, tools for driving metal fasteners into solid materials such as concrete, steel, masonry, wood, and operated by the firing of an explosive charge such as a blank cartridge. Such tools are well known and by way of example only I mention the tools known by the trademark "Ramset."

There are several main requirements for fastening tools of this type and one of the most important is that it must be safe to operate at all times. Thus, the tool should be incapable of operating except when it is in the proper position for firing a fastener into a solid surface. Further, the tool should be easy to load with the fastener pin which is to be driven into the solid material and also easy to load with the cartridge, which is usually a rim-fire cartridge. Then, too, the tool should be easy to unload and it is very desirable that the recoil shock should be light. A further desirable feature is that the tool be trigger-operated, and it is also desirable that the tool be of rugged construction, capable of being used in confined spaces and be relatively economical to manufacture in quantities, as well as being durable in use.

An important object of the invention is to provide a tool of the type mentioned which will be easy to load with the fastener and with a cartridge. Another important object is to provide a tool which will be safe to operate at all times. Yet another object is to provide an explosive-powered fastening tool which will be convenient to use and incorporate desirable safety features. A further object is to provide a tool of the type mentioned which will be inexpensive to manufacture, of sturdy and durable design and construction and convenient and safe to operate.

According to one aspect of this invention there is provided an explosive powered fastening tool having a body, cartridge-firing means in the body and a breech block for holding a cartridge, characterized in that the breech block is mounted pivotally relative to the cartridge firing means so that the breech may be opened to permit a cartridge to be engaged therein or removed therefrom. In another aspect of the invention the explosive-powered fastening tool includes a body having at one end means to receive a fastener to be impelled therefrom, cartridge-firing means at the opposite end of the body, and a breech block intermediate said fastener-receiving means and the cartridge-firing means, characterized in that the breech block is laterally movable relative to the body to permit an explosive charge to be readily loaded into the breech and a fastener to be readily fitted into the fastener receiving means. In a preferred construction the breech is hingedly mounted on the body so that it can be swung outwardly to a loading position or inwardly to a firing position.

It is also preferred that there be provided a handle, at the rear end of the body so as to be longitudinally movable thereon, said handle enclosing the cartridge firing means. Particularly, the handle may be moved forwardly relative to the breech so as to lock the breech in its closed position.

Another feature resides in the mounting of the handle of the tool on the body of the tool in such manner that on the firing of the charge in the tool the body can recoil into the handle so as to thereby lessen the shock of recoil.

A further feature of the invention resides in the provision of trigger mechanism for operating the tool and cocking means adapted to set the firing means to a position whereat they may be operated only when the tool is safe to be fired so that the firing mechanism is in an uncocked or inoperative condition until all safety precautions have been observed.

A still further feature resides in the provision of a piston operated, explosive-powered fastening tool having simple yet effective buffer means to stop the travel of the piston. In the preferred form, such buffer means include a tubular housing, a number of resilient rings in said housing and spacer rings between adjacent resilient rings.

Yet another feature of the invention resides in the provision of simple yet effective means for ejecting a spent cartridge from a cartridge chamber, and for returning a piston within the tool to its operative position after the firing of the tool.

Other features, objects and advantages of the invention will be apparent from the following detailed description.

In order that the invention may be readily understood and conveniently put into practical form I shall now describe, with reference to the accompanying illustrative drawings, a preferred construction of explosive-powered fastening tool made according to the invention together with a modification of one portion thereof. In these drawings:

FIGURE 1 is a perspective illustration of the tool in an uncocked position;

FIGURE 2 shows a similar view of the tool but with the breech open;

FIGURE 3 is a longitudinal cross-section of the fastening tool in the uncocked position as depicted in FIGURE 1;

FIGURE 4 shows a longitudinal cross-section of the fastening tool in the cocked position;

FIGURE 5 is a transverse cross-section through the fastening tool at the location and in the direction indicated by the line and arrows **5—5** of FIGURE 3;

FIGURE 6 is a transverse cross-section at the location and in the direction indicated by the line and arrows **6—6** of FIGURE 3;

FIGURE 7 is a detail view on enlarged scale of a part of FIGURE 6;

FIGURE 8 shows a transverse cross-section at the location and in the direction indicated by the line and arrows **8—8** of FIGURE 4;

FIGURE 9 illustrates, in longitudinal cross-section taken at the location and in the direction indicated by the line and arrows **9—9** of FIGURE 6, a further detail of construction;

FIGURE 10 is a transverse cross-section taken at the location and in the direction indicated by the line and arrows **10—10** of FIGURE 3 and it shows in dotted outline the dropped or open position of the breech;

FIGURE 11 shows a longitudinal cross-section through the tool, the section being taken at the location and in the

direction indicated by the line and arrows 11—11 of FIGURE 10, and it shows in dotted outline an alternative location of the retractor;

FIGURE 12 is a transverse cross-section taken at the location and in the direction indicated by the line and arrows 12—12 of FIGURE 11;

FIGURE 13 is a longitudinal cross-section taken at the location and in the direction indicated by the line and arrows 13—13 of FIGURE 10; and

FIGURE 14 illustrates, in longitudinal cross-section, a modified construction of buffer.

The explosive-powered fastening tool illustrated in these drawings has a body 21, a breech block 22 hingedly connected to the body 21, a retractor 23 slidably fitted to the breech block 22, a handle 24 on the rear end of the body 21 and a shield 25 on the front end of the body. A piston is mounted within the breech block 22, firing mechanism is mounted in the handle 24, cocking devices are mounted in the shield, body, breech block and handle, and buffer devices are provided in the front of the body 21.

The body 21 has a front portion with a transverse surface 26 at its rear end and provided with a substantially cylindrical chamber having an internal screw-threaded portion at its front end, and a sleeve 27 is screwed into that chamber. The sleeve 27 has at its outer end an external flange 28 adapted to engage with an internal flange 29 within the shield 25 and thereby limit the outward movement of said shield. A helical compression spring 30 is located between the flange 29 and the front end of the body 21, to press the shield 25 outwardly.

At the front of the sleeve 27 there is also an internal flange 31 and slidable within that flange 31 is a guide 32 having a shouldered part 33 at its inner (rear) end and an insert 34, of nylon or other suitable, durable and shock resisting material, fitted within the shouldered part. The outer surface of the shouldered part 33 is tapered towards the inner end so as to seat snugly in a tapered seating of a housing collar 35 mounted tightly in the rear end of the chamber in the front portion of the body 21. That housing collar 35 constitutes a stop for the inner end of the sleeve 27 as well as a stop to limit the rearward sliding movement of the guide 32.

Fitted between the internal flange 31 and the shouldered part 33 of the guide are a number of rings of rubber 36 separated by spacer rings 37. The rings 36 tend to press the guide 32 rearwardly, but said guide can slide forwardly and in doing so will compress the resilient rings 36. As the rings 36 are compressed longitudinally they must expand radially until they fill the spaces available and then they will retard the longitudinal movement of the guide 32.

Through the guide 32 is a bore 38 to accommodate the fastener to be ejected from the tool and the insert 34 has a tapered opening 39 to accommodate the rear end portion of the pusher rod of the piston.

The shield 25 is slidable on the front portion of the body, and it has a front plate 41 adapted to press against the wall or plate into which a fastener is to be fired, a bore into which fits the front of the body 21 and having the internal flange 29 previously mentioned, a longitudinal opening 42 accommodating a pin 43 and the front portion of a cocking rod 44, said cocking rod having a headpiece 45 at its front end and fitted about it a compression spring 46 mounted between that headpiece and a shouldered part of the body 21. The pin 43 can slide a limited amount linearly in the shield 25, being held in position by a fine screw 47 in the front plate 41, and it is biased rearwardly by a light spring 48.

The body 21 also has a rear portion of substantially cylindrical shape having a transverse surface 49 at its front and substantially parallel to the transverse surface 26. The handle 24 is mounted thereon for limited sliding movement by two screws 50—see FIGURES 6, 8 and 9—engaged in parallel, tapped longitudinal holes 51 provided in the rear of the body. Each of said holes 51 is counterbored to accommodate a portion of a compression spring 52 which operates to press the handle 24 rearwardly, and the heads of the screws 50 fit in counterbored holes 53 provided in the rear of the handle. The screws 50 are of such length and so adjusted that when the handle 24 is moved forwardly to the firing position—to be described later—the heads of the screws project a small amount beyond the back of the handle to provide a visual indication that the tool is ready for firing.

Two further longitudinal holes are provided in the rear portion of the body 21—a tapped, stepped hole 54 accommodating a ball 55, compression spring 56 and screw 57 providing a detent to hold lightly the breech block 22 in closed position, and a stepped hole 58 having a tapered part at its forward end accommodating a firing pin 59. A screw 60 is engaged in the rear of the firing pin 59 and its head portion fits in a hole 61 provided in the rear of the handle between the two holes 53 but not on the same transverse line. A compression spring 62 is fitted about the front part of the screw 60 so as to press the firing pin 59 forwardly. As is apparent from the drawings both holes 54 and 58 extend through the transverse surface 49.

Said firing pin 59 has a tapered front end—adapted to fit through the front of the hole 58 and make firing contact with a cartridge in a chamber at the rear of the breech block 22—and an enlarged intermediate part 63 provided with a radial hole in which are mounted a compressing spring 64 and a detent 65, shown particularly in FIGURE 7. The outer end of said detent 65 fits in a longitudinal slot 66 in the underside of the rear portion of the body 21 and when engaged with the rear end of the clocking rod 44 is adapted to hold the firing pin against forward movement until pressed inwardly against the pressure of the spring 64 by the trigger. The detent 65 is shouldered to form a neck at its outer end and it is that neck which fits in the slot 66, the shoulder holding the detent against further outward movement.

The longitudinal slot 66 extends the full length of the rear portion of the body and the trigger 67 is mounted in said slot by means of a transverse pin 68. Said trigger has a finger piece 69 and a pawl 70 adapted to engage with the end of the detent 65 and to press it inwardly of the firing pin 59 when said detent is in the correct longitudinal position. The trigger is acted upon by a compression spring 71 mounted in a recess in the handle 24.

The handle 24 has a grip 73, a guard 74 which is slotted at 75 to receive the trigger 67, and a chamber 76 which houses the rear portion of the body 21. That chamber 76 is of sufficient depth to enable the handle 24 to be slid forwardly until the front of the handle projects beyond the transverse surface 49 and also to enable the body 21 to recoil a short distance into the handle 24 when an explosive charge is fired.

The body 21 is cut away between the front and rear portions described above and that intermediate part constitutes a substantially semi-circular shell having hinge members 78 on its underside. The external surface of said intermediate part is, for a major part of its length, the same shape and size in transverse cross section as the front portion of the body save that the lower part is cut away to provide an opening to receive a hinge member 79 of the breech block 22. The hinge members 78 on opposite sides of that cut-away portion have coaxial passageways aligned with the longitudinal opening 42 of the shield 25 to accommodate the cocking rod 44 which acts, at that location, as a hinge rod the rear end portion 80 of said intermediate part is semicircular in shape and slightly smaller in radius than the remainder of said intermediate part. The internal surface of said intermediate part is semi-cylindrical and slightly smaller in radius than the external surface of the housing collar 35 of the front part of the body 21.

The hinge part 79 of the breech block 22 has a longitudinal passageway to accommodate a portion of the cocking rod 44 so that said breech block may be hingedly mounted upon said rod 44 between the transverse surfaces 26 and 49 of the front and rear portions of the body 21. The breech block 22 is of such length that it fits neatly between those two transverse surfaces, as is clearly shown in FIGURES 3 and 4, and its inner longitudinal side is shaped to fit snugly within the intermediate portion of the body 21—see FIGURE 10. The outer side of the breech block has a longitudinal dovetail slot 82 into which is fitted the retractor 23 and the rear end 81 of said outer side is the same radius as the rear end portion 80 of the intermediate body portion.

The cocking rod 44 extends through the longitudinal passageways of the hinge members 78, 79 and at the rear end thereof there is a finger 83 which extends upwardly into the slot 66 in the underside of the rear body portion and rearwardly at about the same level as the detent 65 of the firing pin 59 so as to be adapted to engage therewith. At the front of the finger 83 is a collar 84 adapted to seat upon the rear end of the rear hinge member 78 and limit the forward movement of the cocking rod 44 under the action of the spring 46.

The breech block 22 has a longitudinal chamber which, when the breech block is in closed position, is co-axial with the bore 38 and tapered opening 39 of the guide 32 and insert 34, respectively, in the front of the body 21. That chamber 85 accommodates the piston means which comprises a driving piston 86 and a separate pusher 87 having freedom of relative longitudinal movement.

This piston, having the separate pusher, is constructed and adapted to operate substantially as described in my copending application Serial No. 150,828, filed November 7, 1961, now U.S. Patent No. 3,095,573, issued July 2, 1963. As this piston does not form part of the present invention no further description is necessary, save that I prefer to make the rear end of the pusher tapered, as illustrated, to reduce likelihood of fracture at that location and for that reason the opening 39 of the insert 34 is tapered.

At the rear end of the breech block 22 there is a cartridge chamber 88 leading directly into the rear end of the chamber 85. It is to be noted—see FIGURES 3 and 4—that the hole 58, in the rear portion of the body 21, which accommodates the firing pin 59 is so located that rim-fire cartridges must be used. Also, in the transverse surface 49 there is an inclined surface or ramp 89 acting as a guide for the head of a cartridge placed in the cartridge chamber 88 to ensure that the cartridge is pressed firmly home into that chamber before the breech is fully closed.

A slot 90 is formed in the wall of the breech block 22 between the dovetail slot 82 and the longitudinal piston chamber 85. The retractor 23, which has a slide engaged in the slot 82, has a finger piece 91 by which it may be conveniently moved linearly, a spring-pressed ball 92 in its side adapted to slide with projection in slot 90 for frictional retention of the retractor and to engage with a seating provided at a suitable location in the breech block 22 at a desired point along the length of the slot 90, and a spring-loaded plunger 93 the inner end of which is adapted to fit through that slot 90 and project into the chamber 85 when said plunger 93 is pressed inwardly—see the dotted outlines in FIGURE 11 A transverse pin 94 limits the outward movement of the plunger 93.

The slide of the retractor 23 is cut away, on its inner side, at the front so that the retractor can be slid forwardly beyond the front of the breech block 22, when the front of the retractor slide projects over the side of the front body portion. The rear end portion of the shield 25 is cut away at 95 to permit full movement of the retractor, and a transverse pin 96 extends into the dovetail slot to limit such forward movement.

At the rear of the breech block 22 is slidably mounted an ejector consisting of an ejector plate 97—see FIGURE 12—mounted on the rear end of a rod 98 slidably mounted in a longitudinal passageway provided in the breech block and having a radial pin 99 at its front end. That pin 99 is acted upon by a compression spring 100 mounted in a longitudinal recess in the breech block and held in position by a screw 101 in the rear end of said recess—see FIGURE 13. The ejector plate 97 projects a small amount across the end of the dovetail slot 82 so that upon full rearward movement of the retractor 23 the rear end of said retractor will engage with the front surface of the ejector plate 97 and will push said plate rearwardly and thereby eject from the cartridge chamber 88 any cartridge therein.

In the rear surface of the breech block 22 there is a shallow recess (not shown) at a suitable location to be engaged by the spring pressed ball 55 when the breech is closed.

I shall now describe the operation of the fastening tool.

Assuming that the tool has been fired, the piston 86 and its pusher 87 retracted, the cartridge case ejected and the ejector plate 97 returned to its inoperative position, and the breech block 22 is in the open position (as shown in dotted lines in FIGURE 10), then in order to reload the fastening tool a fastener, of suitable type, is placed in the tapered opening 39 in the housing collar 35, and pressed forwardly into the bore 38 in the guide 32. Then, a cartridge having a desired charge is placed in the cartridge chamber 88 and the breech block 22 is closed. In closing the breech the cartridge will be caused to be seated in the chamber 88. At that stage the piston 86 and pusher 87, held yieldably in position in chamber 85 by a ring such as a circlip 125 or the like retainer as disclosed in FIGS. 3, 4, and 11 and also in aforenoted U.S. Patent No. 3,095,573, are aligned axially behind the fastener in the guide 38, the front point of the firing pin 59 is a short distance rearwardly of the transverse surface 49 and the detent 65 is in advance of the pawl 70 on the trigger 67, the cocking rod 44 is at its forwardmost position as is the shield 25, and the handle 24 is at its rearmost position—see FIGURE 3.

In order to fire the cartridge in the chamber 88 and to project the fastener into a structure—as a steel or concrete wall—it is now necessary to place the front plate 41 of the shield 25 against the structure and to press upon the handle 24 until the shield 25 is pressed back upon the front body portion, which causes the cocking rod 44 to be moved rearwardly against the pressure of spring 46 and thereby moves the firing pin 59 a short distance rearwardly, and the handle 24 is moved forwardly until the trigger pawl 70 is close to the rear end of the finger 83 and beneath the detent 65. At that stage the front of the handle 24 extends about a portion of the parts 80, 81 at the rear of the intermediate body part and breech block, respectively, thus holding the breech block 22 against opening. At that stage, too, the front of the trigger guard 75 is in engagement with the collar 84 on the cocking rod 44, and said collar provides a stop to limit the forwards linear movement of the handle 24 relative to the body 21 without restricting the ability of the body 21 to recoil and move rearwardly relative to the handle 24. That stop also prevents the application of a high frictional loading on the trigger pawl 70 which would be applied if that pawl were to engage positively with the end of the finger 83.

As the trigger pawl 70 is in line with the detent 65 pivotal movement of the trigger 67 will cause the pawl 70 to press the detent 65 into the enlargement 63 of the firing pin 59 so that said pin can travel forwardly under the action of the spring 62 to fire the cartridge.

It is to be noted that the retractor 23 should be moved forwards so as to cover the front of the slot 90 and

thereby restrict escape of gas, and sound, through that slot.

When the trigger 67 is pressed to fire the cartridge the pawl 70 presses the detent 65 inwardly of the firing pin 59, past the rear end of the finger 83, and then the firing pin can travel forwardly and hit the cartridge. It is believed that the explosion of the cartridge initially causes the pusher 87 to be driven forwardly a short distance in advance of the driving piston 86, that the two parts then travel forwardly with the flanged head of the pusher 87 separated from the front of the piston 86 but with the rear end portion of the neck 126 of the pusher still housed as shown in aforementioned U.S. Patent No. 3,095,573 in the counterbore of the piston. The front of the pusher acts on the fastener 15 in the bore 38 and presses it against the surface to be penetrated and, it is believed, the piston 86 applies to the pusher 87 the driving force to cause the fastener and its frictional retaining washer 16, as shown in the aforenoted patent, to penetrate that surface. As shown in FIG. 4 and/or said aforementioned patent, the fastener is retained in bore 38 at least by confinement between the surface and pusher 87.

When the flanged head of the pusher 87 contacts the rear face of insert 34 the guide 32 is forced forwardly and the buffer rings 36 then operate to stop the piston 86 and the pusher 87.

The recoil of the tool is taken up, to an extent, by the rear body portion moving further back into the handle 24. That tends to lessen the shock of recoil as felt by the operator through the handle 24.

After the tool has been fired the pressure on the handle 24 is released so that the shield 25 is moved forwardly relative to the body 21 and the handle 24 is moved rearwardly. Thus, the cocking rod 44 is allowed to slide forwardly relative to the body 21 and the firing pin 59 is drawn back so that its front end does not project beyond the transverse surface 49. The retractor 23 is moved fully forwardly, the plunger 93 is pushed in so that its inner end projects through the slot 90 at a position in front of the rear end of the pusher 87 and then the retractor is pulled back to draw the plunger back to the rear end of the chamber 85 in the breech block 22. Then, as the pusher 87 has been retracted from the insert 34 and the firing pin retracted to an inoperative position, and as the front of the handle 24 no longer covers the rear end portion of the breech block 22, said breech block 22 can be opened by pulling the finger piece 91 downwardly, and further rearward movement of the retractor 23 actuates the ejector plate 97 to eject the spent cartridge from the chamber 88.

It is to be noted that if, prior to the firing of the cartridge, the tool is tilted relative to the surface into which the fastener is to be projected, so that the front plate 41 is no longer flat against that surface, then the spring 46 will press the pin 43 and the cocking rod 44 forwardly—maintaining the front of the pin 43 in contact with the said surface—and when the cocking rod 44 is moved a certain extent forwardly the firing pin 59 will be moved, by its spring 62, so that the detent 65 is no longer engageable by the trigger pawl 70 and, therefore, the fastening tool cannot be fired. That is a safety feature to prevent firing of the tool when the tool is inclined beyond a certain extent relative to the surface into which the fastener is to be projected. Also, if the shield 25 be removed the tool cannot be fired as the pin 43, which actuates the cocking rod is removed with the shield.

It is also to be noted that the recoil movement of the body 21 is independent of the cocking rod 44 as the body 21 can move rearwardly without affecting the cocking rod.

Reference is now made to the alternative construction of buffering mechanism depicted in FIGURE 14. The sleeve 27*a* has an internal flange 31*a* at its front end, as well as the external flange 28. Fitted within the sleeve are a number of spacers 102 and a rear guide member 103, with a number of buffer rings 36*a* between them. Each of the spacers 102 has an internal ring portion, as does the guide member 103, and they are adapted to be compacted longitudinally so that said internal ring portions will form with the internal flange 31*a* a substantially cylindrical guideway for the piston pusher rod 87. The buffer rings 36*a* are of such internal and external diameters that when they are compressed longitudinally to the extent permitted by the longitudinal compacting of the spacers 102 and guide member 103 the radial expansion produced due to the longitudinal compression will be such as to fill the spaces between the internal ring portions and the internal surface of the sleeve 27*a*.

In this construction the guide 32 is dispensed with as the guideway for the fastener and the pusher 87 is provided by the internal surfaces of the spacers 102.

By reason of the fact that the fastening tool made according to this invention incorporates an efficient buffer system, and that part of the shock of recoil is taken up by the recoil of the body 21 into the handle 24, it is possible to use a relatively heavy piston means and in consequence there is a low-velocity movement of the piston when the tool has been fired. That is a further advantage resulting from the features of the invention as hereinabove set out. In addition, it is a substantial advantage to provide angle-fire control means with a piston-operated explosive-powered fastening tool.

It will be appreciated that a standard type of piston may be used instead of the two-piece piston described, and that other modifications may be made without departing from the ambit of the invention. Thus, the cocking means may be employed with other constructions of fastening tool, as may be the buffer means, and the mounting of the handle 24 on the body 21—to permit of the body recoiling into the handle—may be modified, as may be the connection of the breech block 22 to the body to enable said breech block to be opened for loading or unloading purposes. All such modifications are to be deemed to be within the scope of the invention as defined by the appended claims.

What I claim is:

1. In an explosive-powered fastening tool having a body provided at one end with fastener receiving and guiding means and at the opposite end with a charge firing means, both said means being fixed in substantial alignment, a generally elongated breech block hingedly mounted on a side of said body for lateral movement to extend into one side of said body intermediate said fastener receiving and guiding means and said firing means thereby defining a closed position of said block, and said block having a single passage therethrough in said position in operative alignment with both said means, said breech block having a chamber at one end of said passage to receive an explosive charge for discharging into said passage when ignited by said firing means with said block in said closed position thereby projecting said fastener from the tool, said breech block being laterally movable to an open position adjacent said sides wherein said passage is non-aligned with both of said means and is exposed thereby permitting a charge to be loaded therein preparatory to firing of a charge.

2. The combination claimed in claim 1 wherein there is a cocking rod mounted as a hinge pin for the body and breech block and for longitudinal movement of said body and block relative to the rod and engageable at its rear end with the firing means, said body and block with respect to the cocking rod being adapted to be moved linearly forwardly when the front end of the rod in effect is pressed firmly against a solid surface and when said rod relative to said body and block is in its rearmost position to hold the firing means at a position whereat said means may be operated.

3. The combination of claim 1 wherein the firing means includes a firing pin and first resilient means biasing said pin forwardly, said combination including a handle mounted for longitudinal movement on said opposite

end of the body and operative when thrust to its foremost position to lock the breech block in its closed position, second resilient means extending between said handle and body for biasing said handle rearwardly relative to the body and breech block, said body in the closed position of said block being adapted to recoil into the handle when the tool is fired, a first stop member mounted on said body and engageable with said handle to limit the rearward movement of said handle under said biasing but permitting forward movement of said handle and recoil of said body and block, a second stop member attached to said pin and adapted to engage said handle when said handle is moved toward its rearmost position and operative with said first stop member at said rearmost position to withdraw said pin to an inoperative position.

4. The combination of claim 1 wherein said charge firing means includes a firing pin and a trigger mounted at said opposite end of the body, and a handle mounted for longitudinal movement on said opposite end of the body, means to urge said handle rearwardly, and a stop member attached to said pin to engage said handle and operative when said handle is moved to its rearmost position to keep said pin inoperative but permitting firing pin operation when said handle is thrust forward to its foremost position, wherein there is a front end portion of the tool mounted for longitudinal movement on the fastener receiving end of the body, said portion including a cocking pin movable with said portion, and wherein there is a forwardly urged cocking rod on which said body and the breech block are hingedly mounted to be laterally movable, said body being adapted to be moved forwardly with respect to said rod when said handle is thrust forward. until said tool portion is firmly against a work surface and rearwardly with respect to said one body end, and when said rod and handle respectively are in their rearmost and foremost positions relative to said body and block to move said firing pin rearwardly and hold said firing pin at a position whereat said firing pin may be not only actuated by said trigger but is at the same time operative, said cocking pin when said handle and front end portion are so thrust being operative to hold said rod to its rearmost relative position and when not so thrust to allow said body to move rearwardly with respect to said rod whereby said tool is rendered inoperative.

5. In an explosive-powered fastening tool having a body provided at one end with means to receive a fastener and at the opposite end cartridge-firing means, a breech block mounted intermediate said fastener receiving means and said cartridge-firing means and adapted to be laterally movable relative to the body, the breech block having a cartridge chamber at one end to receive an explosive charge for firing by the cartridge-firing means, said breech block having a chamber to accommodate a piston means, piston means in said chamber, and retractor means mounted on said block and operative to return the piston means to its operative position after the tool has been fired.

6. The combination claimed in claim 5 wherein the retractor means comprise a slide longitudinally movable on the breech block and a plunger carried by the slide, the plunger being adapted to be moved inwardly to engage the piston means when in its foremost position and to draw the piston means rearwardly upon rearward movement of the retractor means.

7. The combination claimed in claim 5 wherein the retractor means comprise a slide longitudinally movable on the breech block and a plunger carried by the slide, the plunger being adapted to be moved inwardly to engage the piston means when in its foremost position and to draw the piston means rearwardly upon rearward movement of the retractor means, and wherein the breech block has cartridge ejector means at the rear end thereof, said retractor means being adapted to effect operation of the ejector means.

8. In an explosive-powered fastening tool having a body provided at one end with fastener receiving and guiding means and at the opposite with cartridge firing means, both said means being fixed in substantial alignment, a generally elongated breech block hinged on said body about a longitudinal axis to extend into said body intermediate both said means, thereby defining a closed position of said block, and said block having a longitudinal passage therethrough in alignment with said firing means and an inner end of said fastener receiving and guiding means respectively, a piston slidably carried in said passage, said breech block being pivotally movable about said axis to open position wherein said passage is nonaligned with either of said means and is exposed, said block having a chamber at one end to receive an explosive cartridge for ignition by said firing means and discharge into said passage when said block is in said closed position to drive said piston to project into said fastener receiving and projecting means and project said fastener from the tool, said block having means to retract said piston back into said passage thereby permitting said block to be pivoted and said cartridge to be loaded therein preparatory to firing and ejected therefrom after firing, and simultaneously exposing both said inner end and said passage opposite said one end of the block.

9. The combination claimed in claim 8 wherein there is mounted in the one end of the body, buffer means for absorbing at least part of the shock in said one end in the event of impact of the piston when the tool is fired.

10. The combination of claim 9 wherein the buffer means comprises an assembly of interspersed resilient rings and longitudinally movable spacer rings in a tubular housing mounted in said one end of the body about an axial passage in said fastener receiving and projecting means, said resilient rings being adapted to be compressed longitudinally in the event of impact of the piston with said buffer means until said resilient rings expand radially to fill the space between said axial passage and tubular housing, said assembly and axial passage being substantially coaxial with said breech block and breech block passage respectively and being exposed at the inner end of said fastener receiving and guiding means for said impact in said one end of the body without interference with projection of the fastener through said axial passage while at the same time preventing movement of said piston out of the tool.

11. The combination claimed in claim 10 wherein a guide tube is mounted for longitudinal movement in the tubular housing for abutment with a work surface and the resilient rings and spacer rings are mounted between the outer wall of the guide tube and the inner wall of the tubular housing, and for deformation of said resilient rings between said spacer rings, an internal flange at the front of the housing and an external flange at the rear of the guide tube, said external flange including a nonmetallic plastic insert for direct abutment with the piston.

12. The combination of claim 9 wherein the buffer means includes a resilient member, and wherein a guide tube is mounted for limited longitudinal movement in said one end of the body, and said resilient member is mounted for deformation between the outer wall of said guide tube and the inner wall of said one body end, and between an internal flange at the front of said one body end and an internal flange at the rear of said guide tube, there being an insert of nonmetallic plastic material on said external flange for direct abutment with the piston.

13. The combination claimed in claim 8 wherein there is a detent operative between the breech block and body to yieldably hold said block in the closed position, and a handle at the rear end of the body and said handle is longitudinally movable on the body, said handle being operative when in its foremost position to lock the breech block in its closed position and when in its rearmost position to allow said block to be pivoted to its open position.

14. The combination of claim 8 wherein the retractor

means is mounted slidably on the outside of said breech block and is manually operative for longitudinal reciprocating movement on said block, and wherein the breech block has a longitudinal slot forming an opening between the piston chamber and said retractor, said retractor means including a detent projectable through said slot into said chamber for engaging with the piston for returning said piston to an operative position adjacent said cartridge chamber and is disengageable from said piston when said retractor means is moved in the opposite direction.

15. The combination of claim 14 including a cartridge extractor mounted on said block and wherein the retractor means actuates said extractor when moved in the opposite direction to its rearmost position while said block is in its open position.

References Cited by the Examiner

UNITED STATES PATENTS

2,395,354	2/46	Temple	1—44.5
2,893,279	7/59	Haskell et al.	1—44.5 X
2,910,701	11/59	Temple et al.	1—106
2,930,041	3/60	Massacrier	1—44.5
3,066,302	12/62	De Caro et al.	1—44.5

FOREIGN PATENTS

6,491	11/14	Great Britain.

GRANVILLE Y. CUSTER, JR., *Primary Examiner.*