Nov. 19, 1957 R. M. WILCOX 2,813,398

THERMALLY BALANCED GAS FLUID PUMPING SYSTEM

Filed Jan. 26, 1953 3 Sheets-Sheet 1

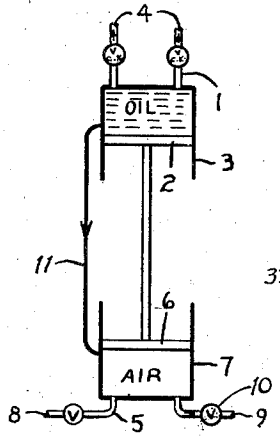

Fig. 1.

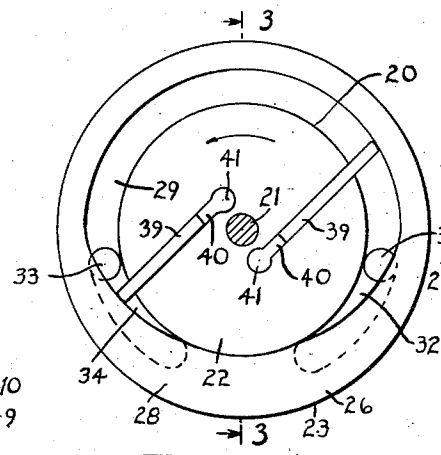

Fig. 2

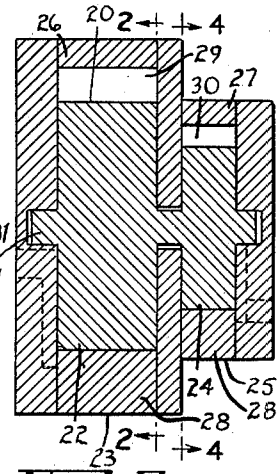

Fig. 3.

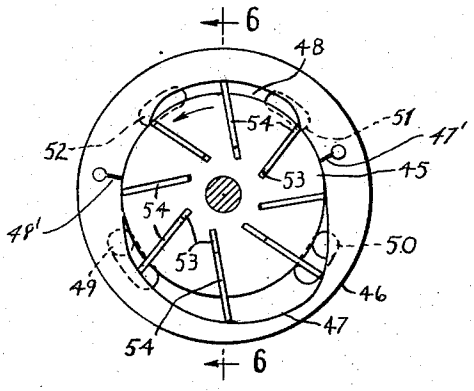

Fig. 5.

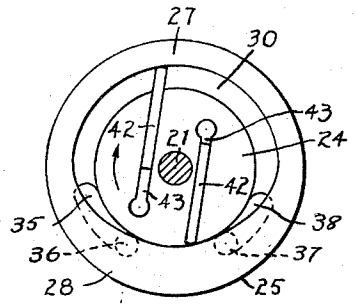

Fig. 4.

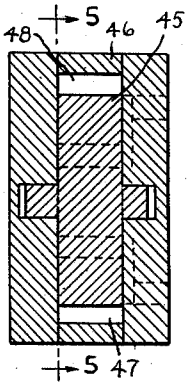

Fig. 6.

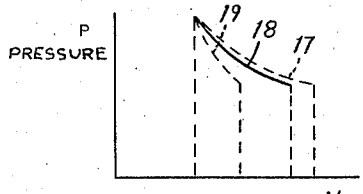

Fig. 11.

V - VOLUME OF INCREMENT OF GAS REMAINING IN CYLINDER (Fig 13)

INVENTOR

ROY M. WILCOX

By Douglas S. Johnson

ATTY.

Nov. 19, 1957 R. M. WILCOX 2,813,398

THERMALLY BALANCED GAS FLUID PUMPING SYSTEM

Filed Jan. 26, 1953 3 Sheets-Sheet 2

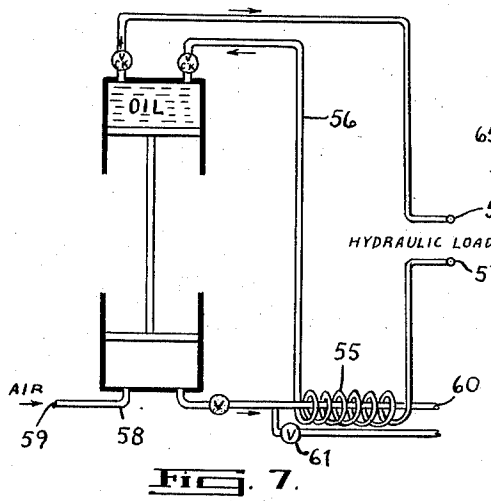

Fig. 7.

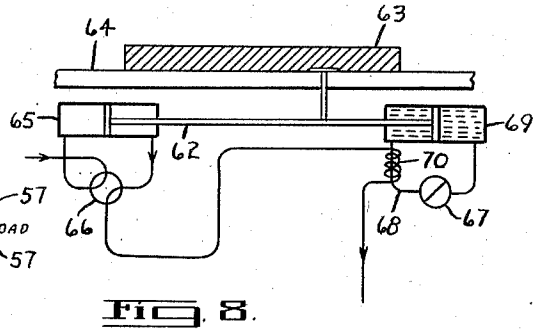

Fig. 8.

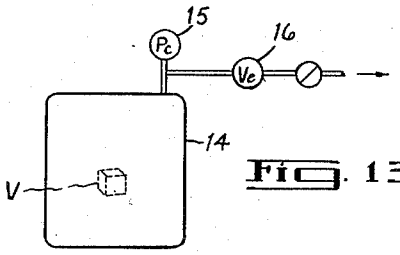

Fig. 13

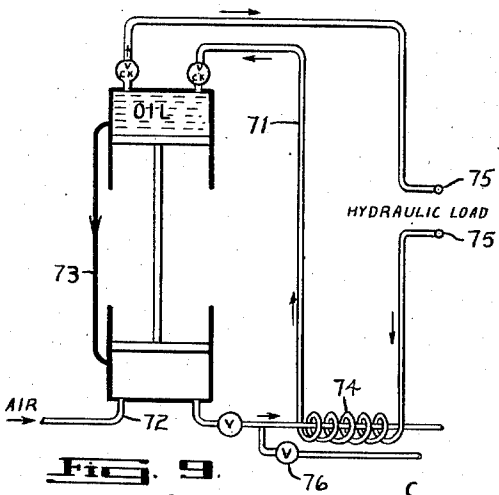

Fig. 9.

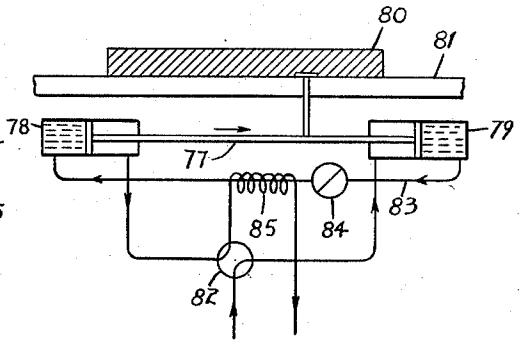

Fig. 10

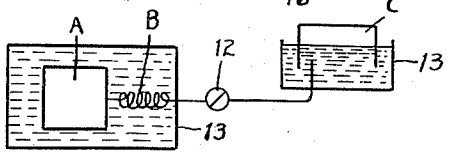

Fig. 12.

INVENTOR

ROY M. WILCOX

By Douglas S. Johnson

ATTY.

Nov. 19, 1957 R. M. WILCOX 2,813,398

THERMALLY BALANCED GAS FLUID PUMPING SYSTEM

Filed Jan. 26, 1953 3 Sheets-Sheet 3

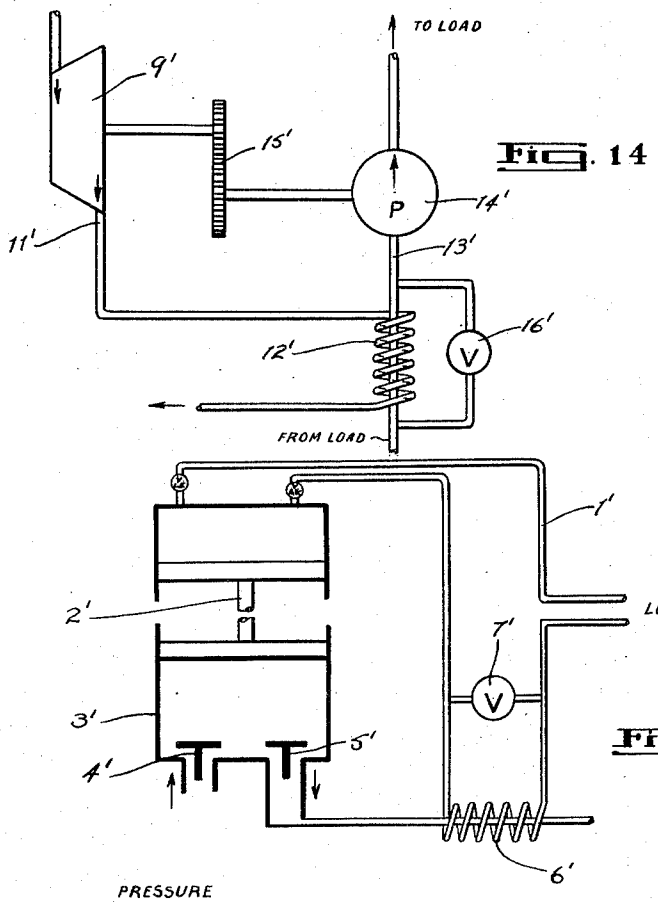

Fig. 14.

Fig. 15.

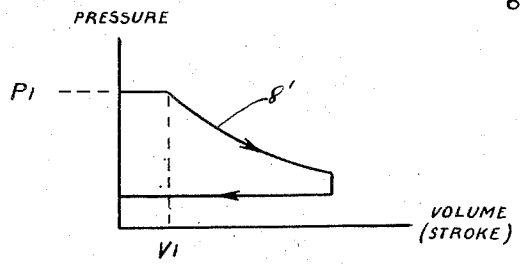

Fig. 16.

INVENTOR
ROY M. WILCOX
By Douglas S. Johnson
ATTY.

United States Patent Office 2,813,398 Patented Nov. 19, 1957

2,813,398

THERMALLY BALANCED GAS FLUID PUMPING SYSTEM

Roy Milton Wilcox, Grand Rapids, Mich.

Application January 26, 1953, Serial No. 333,205

7 Claims. (Cl. 60—51)

This invention relates to systems wherein pressure gas, normally compressed air, is utilized to pump a hydraulic liquid, normally oil.

In the pumping of oil through a system the hydraulic energy of the oil is converted usually mainly into unwanted heat energy and this heat may often adversely affect the mechanisms operated by the system.

For instance, in a precise grinding machine where the work done by the hydraulic system in driving the work table against the grinding wheel is negligible the hydraulic energy of a pressure oil in a hydraulc system connected to operate the machine table is essentially all converted into heat which must be extracted to prevent uneven thermal expansion of the machine frame.

Heretofore this problem of heat extraction, whether the heat be generated from hydraulic or other energy, has been a serious one and it has been impossible to maintain a uniform temperature throughout the machine which is so urgently required in precise machinery.

For instance, in present grinding machines it is common to make the necessary adjustments for grinding when the machine is in operation and to readjust as the temperature of the machine comes up under operation and to continue to readjust as the temperature fluctuates from time to time.

Alternatively, some precision machine tools require the machine to be brought up to the operating temperature of the hydraulic system before beginning work necessitating considerable delay and expense.

It is therefore the object of the present invention to provide an hydraulic power system which will have an overall freedom from heat to eliminate the present serious problems of heat distortion.

More particularly, it is the object to provide a system in which the quantity of heat generated upon conversion of hydraulic energy to heat will be extracted by the system to place the system in a thermal balance.

A further object is to provide a thermally balanced system as aforesaid which will extract the heat in an extremely simple and efficient manner without requiring any elaborate or extensive equipment or apparatus.

Still another object is to provide an output liquid flow varying according to the demand without waste of energy, eliminating the necessity of present pumping systems wherein the excess flow must be dissipated through a relief valve.

According to the invention an hydraulic system is rendered thermally balanced by driving the system with a compressed gas and at the same time utilizing the exhaustion of the gas to extract heat generated upon conversion of the hydraulic energy into heat energy due to frictional losses, throttling, etc.

Because a compressed gas is utilized to effect the pumping it will be obvious that the liquid flow can be varied as desired according to the demand.

The invention will be more fully understood from the following considerations of the property of a gas.

A compressed gas supply appears to have two kinds of

energy convertible into mechanical work. The first is the product of supply pressure and volume displaced by the supply and is purely hydraulic in nature, namely, displacement energy. The second is the ability of the air to expand against a resistance, the source of this energy being molecular activity or internal heat energy indicated by temperature, namely, enthalpy (B. t. u./lb.).

If a volume of compressed gas is isolated from its source of displacement energy and expanded under conditions where no heat is added to or taken from the gas, i. e. adiabatically, and does mechanical work, this work must be done at the expense of its heat energy or enthalpy and its temperature therefore drops while its entropy remains constant.

On the other hand, if a gas is expanded under conditions where there is a free transfer of heat to and from the gas, i. e. isothermally, and the gas does mechanical work, heat is absorbed by the gas to maintain constant enthalpy while its entropy is changed.

I discovered experimentally that if I employ compressed air or gas to pump a liquid, thereby creating hydraulic energy, I can utilize the expanding or exhausting of the compressed air which requires heat energy to maintain its enthalpy, to exactly absorb the heat into which the hydraulic energy is converted and to eliminate any overall temperature rise in the liquid and thereby maintain the system in thermal balance.

That is, by providing a system which gives essentially an overall isothermal exhaustion or expansion of the gas with the heat for maintaining the gas enthalpy being derived from the converted hydraulic energy the system is rendered thermally balanced.

Where the compressed air portion of the system and the hydraulic or liquid portion of the system operated by the compressed air are in perfect thermal association the compressed air can be exhausted directly to the atmosphere and the heat transferred directly between the system portions will maintain an isothermal expansion of the air and a thermal balance between gas and liquid.

Where the compressed air and liquid hydraulic portions of the system are thermally isolated the compressed air can be adiabatically expanded at the expense of its enthalpy to lower its temperature, and this exhausting low temperature air may then be lead into thermal association e. g. through a heat exchanger, with the liquid which has become warm under conversion of its hydraulic energy to heat, and the heat extracted from the liquid to restore the gas heat energy to again provide an overall isothermal expansion and thermal balance between liquid and gas.

Alternatively of course, where the compressed air and hydraulic portions of the system are only partly in thermal association the compressed air may be expanded or exhausted, e. g. against the atmosphere under conditions which are neither strictly isothermal or adiabatic, i. e. polytropic, so that some heat from the hydraulic system may be extracted through the thermal connection and the air which still has a subnormal temperature lead into thermal association with the liquid to extract the residue heat and again provide balance of the gas and liquid.

Referring to the accompanying drawings,

Figure 1 is a diagrammatic view illustrating an air-driven liquid hydraulic system in which the air and hydraulic portions of the system are thermally associated.

Figure 2 is a vertical sectional view on the line 2—2 of Figure 3 illustrating an air-driven pump which provides an example of the system diagrammatically illustrated in Figure 1.

Figure 3 is a vertical sectional view of the pump of Figure 2 taken on the line 3—3 of Figure 2.

Figure 4 is a vertical sectional view of the pump taken on the line 4—4 of Figure 3.

Figure 5 is a vertical section on the line 5—5 of Figure 6 of an alternative form of gas-driven hydraulic pump which comprises a system embodying the system illustrated in Figure 1.

Figure 6 is a vertical sectional view on the line 6—6 of Figure 5.

Figure 7 is a diagrammatic view illustrating a compressed gas-driven hydraulic system thermally isolated but having the exhausting gas lead into thermal association with the liquid of the system.

Figure 8 is a more-or-less diagrammatic view illustrating a practical example of such a system incorporated in a machine tool.

Figure 9 is a diagrammatic view illustrating a gas-driven hydraulic system in which the gas and hydraulic portions are partially thermally associated and additionally have exhausting gas thermally associated with the liquid of the hydraulic portion of the system.

Figure 10 is a more-or-less diagrammatic view illustrating a practical application of such a system again in a machine tool.

Figure 11 is a graph illustrating the expansion within an exhausting cylinder of a particular increment of air under conditions which are isentropic, polytropic and isothermal.

Figure 12 is a diagrammatic illustration of an isothermal gas expansion.

Figure 13 is a diagram illustrating a means of measuring the work of exhausting the gas from the cylinder.

Figure 14 is a diagrammatic view of an alternative system to Figures 1, 7 and 9 illustrating a gas turbine involving "inertial" gas expansion pumping the hydraulic liquid with the exhausting gas absorbing the heat generated in the liquid in accordance with the invention.

Figure 15 is a diagrammatic view of a further alternative system illustrating an early cut-off gas pump employing "pumping" expansion to pump the liquid and again utilizing the exhausting gas to absorb the heat generated in the liquid.

Figure 16 is the indicator diagram of the gas pump of Figure 15.

Referring to the drawings, Figure 1 illustrates diagrammatically at 1 a liquid hydraulic circuit represented by a piston 2 operating in a cylinder 3 to circulate oil through a load (not shown) connected across the terminals 4.

The liquid hydraulic circuit is driven by a compressed gas system represented as 5 which again is illustrated as a piston 6 operating in a cylinder 7. Air is introduced under pressure through an inlet 8 and is exhausted through an outlet 9 controlled by a suitable valve 10. The pistons 2 and 6 are shown as inter-connected so that the compressed gas or air entering cylinder 7 drives the hydraulic circuit. The coupling line 11 represents an intimate thermal association between the circuit 1 and the compressed gas system which will permit rapid heat transfer between the component systems 1 and 5.

The operation of the overall system is that the compressed air introduced at 8 circulates the oil in the circuit 1 imparting hydraulic energy to the oil. This hydraulic energy in passing through a load, for instance a throttling valve, such as used in a grinding machine, is essentially all converted into heat energy.

The compressed gas in cylinder 7 is then allowed to escape after having imparted hydraulic energy to the oil and the exhausting or expanding gas issuing from the outlet 9 pushes back the atmosphere at the expense of its enthalpy with the air inlet 8 closed off from the compressed air supply.

The result is a drop in the temperature of the air within the cylinder which, because of its thermal association with cylinder 3 of circuit 1, receives heat therefrom. This heat energy transferred from the oil of circuit 1 is absorbed by the expanding gas in cylinder 7 to restore the latter's heat energy or enthalpy so that the overall expansion or exhaustion of the compressed gas from cylinder 7 is isothermal. Such a system diagrammatically illustrated in Figure 1 has demonstrated a natural and exact heat balance so that there is no change in temperature of the hydraulic oil with time.

The system of Figure 1 is a system in which the gas is expanded on exhaust.

Figure 15 illustrates a system in which the gas is expanded to do the pumping and again the cooling available by the gas expansion is sufficient to balance the heat produced by complete conversion of the hydraulic energy of the liquid to heat, to thermally balance the system.

In the system of Figure 15 the hydraulic liquid or oil system is represented by 1' having hydraulic energy imparted thereto by a double-ended piston 2'. The gas or air system is shown as a cylinder 3' having inlet and outlet valves 4' and 5' respectively. Gas or air under pressure is admitted through valve 4' which is momentarily opened and closed and the gas then effects the piston movement by its own expansion at the expense of its enthalpy. At the end of the power stroke the valve 5' is opened and the cold gas is allowed to escape and is led through a heat exchanger 6' in thermal association with the liquid of the hydraulic system where the cooling gas absorbs heat from the liquid.

Where complete conversion of the hydraulic energy of the liquid to heat takes place the cooling effect of the gas balances the heat of the liquid to render the system thermally balanced. Where only partial conversion of the hydraulic energy to heat takes place the full cooling ability of the gas is not required and the heat of the liquid may be removed by passing only a portion of the liquid through the exchanger 6' and the remaining liquid may be bypassed through the valve 7'. Alternatively of course a portion of the cooling gas may be bypassed or obviously the heat exchanger 6' may be constituted so that the extent of heat transfer can be controlled.

A system such as shown in Figure 15 has a gas pressure volume relation as shown by the well-known indicator diagram curve 8' in Figure 16 where P_1 represents the input pressure and V_1 represents the input volume of gas, and the area within the curve represents the work done by the gas in driving the piston 2' during its power or pumping stroke.

In addition to the above systems employing exhaust and pumping expansion, Figure 14 discloses a gas system comprising a turbine 9' in which inertial expansion takes place in the nozzles or blading and the pumping energy is mainly derived from the molecular energy or enthalpy of the gas which exhausts at 11'. Again the cold gas is led through a heat exchanger 12' into a thermal association with the liquid of the hydraulic system 13' whose pump 14' is driven through the reduction gearing 15'. A by-pass 16' is provided to reduce the heat exchange between the gas and liquid where total conversion of the hydraulic energy of the liquid to heat does not take place. Again, in this inertial expansion system the cooling available by expansion of the gas is just sufficient to balance out the heat energy produced by total liquid hydraulic energy conversion to heat to render the system thermally balanced. Under such conditions the gas expansion is isothermal. Where only partial conversion takes place there is, again, an excess of cooling over heat and the heat from the liquid can readily be extracted.

The following analysis clearly confirms that the inertial, pumping and exhaust expansion types of gas drives, that is, the pre-exhaust expansion drives and the exhaust expansion drives, both provide sufficient cooling to extract the heat from the hydraulic system driven by the gas.

When the pumping system is set in operation, the liquid and supply of compressed gas being at room temperature, for the first instant of operation the gas leaving the system is also at room temperature because of its close thermal association with the relatively very large thermal capacity of the liquid circuit. In other words, the air in passing through the system undergoes an overall isothermal expansion during the first instant of operation.

What happens after that depends on whether the gas stream so expanded provides an excess or deficiency of the cooling of the liquid. Examining this quantitatively since in an isothermal expansion $PV=C$

$$P_I V_I = P_a V_a = C \quad (1)$$

where V and P represent volume and absolute pressure and sub I and *a* indicate the gas inlet and outlet of the overall pumping system. Furthermore, both the entropy temperature graph for air and the Joule-Thompson effect establish that any overall isothermal expansion, under ordinary factory conditions, say 100 p. s. i. pressure and 70° F. expanding to atmospheric pressure, results in but a slight increase in enthalpy *h* that is

$$h_I = h_a \text{ approx. (i. e. } h_I < h_a) \quad (2)$$

Therefore combining 1 and 2

$$P_I V_I + h_I = P_a V_a + h_a \text{ approx.} \quad (3)$$

that is, in any overall isothermal expansion the total energy of the gas E remains nearly constant with but a slight increase that is

$$E = PV + h = C \text{ approx. (i. e. } E_I < E_a) \quad (4)$$

Since the gas in passing through the system gives up considerable energy in pumping the liquid the gas must regain an equivalent (slightly greater) amount of energy from the liquid in order to pass through the system with a slight net increase in total energy as required by Equation 4. That is to say, during the first instant of operation the cooling energy of the air balances the heat generated in the oil with a slight tendency towards excess cooling. Therefore no matter whether the conversion of hydraulic energy into heat is complete or not the system provides adequate cooling of the liquid.

The large cooling power of engines expanding a gas during their power stroke has been well described and mathematically evaluated in the literature. However, the cooling power of air motors expanding only at exhaust seems not generally to be understood.

In Joule's experiment with isothermal "exhaust" expansion illustrated in Figure 12 compressed air in a container A was released through a heat exchanger B as controlled by valve **12** into an inverted container C, with the result that work was done in raising weightless container C, against atmospheric pressure, both containers A and C being arranged in tanks **13**.

This experiment has established that the work done against the atmosphere was equal to the heat H_e absorbed into A and B from the surrounding water in tank **13**, assuming A and B were held at a constant temperature during the expansion, that is,

$$E_a = P_a(V_a - V_A) = H_e \quad (5)$$

where

E_a=work of displacing atmosphere
V_a=air exhaust volume (at atmospheric pressure)
V_A=volume of container A and exchanger B; and
H_e=the heat transferred from the liquid to the air.

Now considering the system illustrated in Figure 1:
From Equation 1 it follows mathematically that

$$P_I V_I - P_a V_I = P_a V_a - P_a V_I \quad (6)$$

that is

$$(P_I - P_a) V_I = P_a(V_a - V_I) \quad (7)$$

but $P_I - P_a = P_{IG}$ where P_{IG} is the net pressure acting against the piston as measured by a gauge.

Substituting P_{IG} in Equation 7

$$P_{IG} V_I = P_a(V_a - V_I) \quad (8)$$

Comparing this equation with Equation 5 V_I the volume of cylinder **7** corresponds to V_A the volume of cylinder A and therefore

$$P_{IG} V_I = P_a(V_a - V_I) = H_e \quad (9)$$

but

$$P_{IG} V_I = \text{piston force} \times \text{stroke} = E_I \quad (10)$$

where E_I is the indicated air input energy assuming zero dead space.

Therefore the indicated pump input

$$E_I = H_e \quad (11)$$

which is the heat absorbed into the air to produce an isothermal expansion of the air from the cylinder against the atmosphere.

Where the system diagrammatically illustrated in Figure 1 is applied to machines having frictionless bearings lubricated with air in accordance with United States Patent No. 2,683,635, dated July 13, 1954, none of the hydraulic energy is converted to heat outside the hydraulic circuit through bearing friction. Therefore, in the case of precise air lubricated grinding machines substantially all of the hydraulic output E_o from the hydraulic circuit **1** is converted into heat within the hydraulic circuit which can therefore be extracted to prevent uneven thermal expansion of the machine frame.

Thus in grinding machines, output

$$E_o = H_o \quad (12)$$

the heat in the oil from dissipation of the hydraulic output and the pumping losses.

$$E_L = \text{mechanical and fluid friction} = H_L \quad (13)$$

the resulting heat within the pump

The pumping input equals the output plus losses that is

$$E_I = E_o + E_L = H_o + H_L \quad (14)$$

from Equations 12 and 13.

From Equations 11 and 5

$$E_I = H_e = H_o + H_L = E_a \quad (15)$$

That is to say, in such a system there is a themal balance with the heat H_e extracted from the liquid to expand the gas from cylinder **7** exactly balancing the heat generated by conversion of the hydraulic output E_o in addition to pumping losses E_L.

Although the overall change in the gas passing through the system (thermally associated motor-pump) of Figure 1 is isothermal, no part of this change takes place at constant temperature. The change begins when the outlet or exhaust port **9** is opened by valve **10**. The content of cylinder **7** is expelled by its own descending pressure against its own inertial resistance and fluid friction. The mechanical work thus performed by the air remaining in the cylinder at expense of the air's enthalpy *h* but reinforced by heat transferred as indicated at **11** from the oil is

$$E_E = \int_{P_I}^{P_a} P_c \, dV_E \quad (16)$$

where again

P_a=atmospheric pressure
P_I=input pressure, absolute
P_c=cylinder pressure, absolute
V_E=volume of air entering exhaust port at cylinder pressure

The value of this integral if the expansion were completely isothermal can be shown mathematically and has been demonstrated experimentally by the apparatus of Figure 13 to equal E_I the air energy input to the cylinder **7**. That is, if the expansion were isothermal the work E_E of expelling the gas from the cylinder would equal the indicated pump input $E_I = E_a$ from Equation 15.

As shown in Figure 13 the pressure of the air in cylinder **14** which is isothermally expanded is measured by the indicator **15** and the volume displaced through the exhaust port is measured by the indicator **16** to enable experimental summation of the integral above.

Figure 11 shows in graph form the pressure volume relation of an increment of the gas remaining in the cylinder 14 and by analogy the cylinder 7.

Curve 17 represents the pressure-volume relation where there is a pure isothermal expansion of the air against the atmosphere. As explained, in practice some drop in temperature occurs within the cylinder 7 in order to effect transfer of the heat as at 11 and the pressure volume relation under actual expansion of the air against the atmosphere is shown at 18 as a polytropic curve. Isentropic curve 19 represents pressure volume relation with adiabatic air expansion in which the gas entropy is constant.

The areas under these curves represent the work done in exhausting the gas and the increase in area under the curve 18 as compared to the curve 19 represents the energy derived from the heat H_e transferred from the oil to the air.

Of course the more intimate the thermal association between circuit 1 and the gas system 5 the more closely the curve 18 will approach and move toward coincidence with curve 17, so that the exhaustion of the gas against the atmosphere can properly be considered isothermal.

From the above derivations it will be appreciated that very simply in the system disclosed in Figure 1 the pressure air entering the inlet 8 of the cylinder 7 has enthalpy and displacement energy. This displacement energy is utilized to produce hydraulic energy in the cylinder 3. The enthalpy of the gas is utilized to exhaust the gas or air through the outlet 9. In turn the hydraulic energy, which is converted into heat energy, is utilized to restore the gas enthalpy to obtain an over-all isothermal expansion and thermal balance.

Figures 2 to 4 illustrate a practical system represented in diagrammatic form by Figure 1. This device comprises an air-driven oil pump having a rotor 20 mounted to rotate on an axis 21. In order to pump the pressure of the oil above that of the air the rotor is formed with an enlarged portion 22 which operates within an enlarged stator housing 23 and with a reduced portion 24 which operates in a reduced stator housing 25. The peripheral walls 26 and 27 of the stator housings 23 and 25 respectively are thickened at one side as at 28 so that the rotor portions 22 and 24 rotate in close fitting contact therewith throughout the portions 28. The remainder of the peripheral walls 26 and 27 are spaced from the rotor to define the part-circumferential chambers 29 and 30.

Leading into the chamber 29 through an inlet 31 is an air supply passage 32, while leading out through a discharge orifice 33 is an exhaust passage 34.

In a similar arrangement oil is delivered to the chamber 30 through in inlet 35 leading from a supply passage 36 and is discharged through an orifice 37 communicating with a discharge passage 38.

Mounted in the rotor portion 22 are radially slidable blades 39 mounted in slots 40 to the inner ends 41 of which pressure oil is delivered (the supply system being omitted for simplicity) to urge the blades outwardly against the inner periphery of the stator housing 23. A similar arrangement of blades 42 mounted in slots 43 is provided in the reduced rotor portion 24.

Pressure air introduced through the inlet port 31 into a chamber 29 will drive the rotor 20 through the blades 39 to pump oil in the chamber 30 by means of the blades 42. Thus the displacement energy of the air will be converted into hydraulic energy of the oil. When the blades move to the position of Figure 2 to uncover the discharge orifice 33 and chamber 29 the air expands against the atmosphere and its temperature tends to drop. Meanwhile the hydraulic energy imparted to the oil by the blades 42 is being converted by an external load to heat which heats the oil.

The rotor 20 and stator housing 23 both serve as thermal conductors to intimately thermally associate the liquid hydraulic and the compressed air portions of the system so that the heat H_e of the oil is transferred to the air to restore the air temperature or enthalpy.

Figures 2 to 4 represent what may be termed as a twin rotor vane type of air-driven oil pump.

Figures 5 and 6 illustrate a mono-rotor vane type air-driven oil pump which again places the hydraulic and the compressed gas portions of the system in intimate thermal contact for thermal balance.

Referring to Figures 5 and 6, the rotor 45 rotates in a stator 46 which is formed to provide the spaced part-peripheral chambers 47 and 48 about the rotor.

Entering into the chamber 47 is an air inlet 49, while leading from the chamber is an exhaust passage 50. A similar arrangement of oil inlet 51 and oil outlet 52 is provided in chamber 48.

Mounted in slots 53 in the rotor 45 are blades 54 which are urged outwardly of their slots by pressure oil introduced into the base of the slots by a supply system omitted for simplicity of illustration.

Pressure air introduced to chamber 47 through the inlet 49 effects a driving of the rotor through the blades 54. This air expands and exhausts against the atmosphere through the outlet 50. The driving of the rotor 45 will effect a pumping of the oil through the chamber 48 to impart hydraulic energy to the oil. This hydraulic energy converted into heat acting to heat the oil is in turn transferred through the thermo-coupling afforded by the rotor 45 and the stator 46 to restore the compressed air enthalpy and maintain a thermal balance.

In order to impart a pressure to the liquid higher than the gas pressure the radial thickness of the chamber 47 is made much larger than that of the liquid chamber 48 (Figure 5). In this way the vanes protrude further in the gas chamber and present a larger area to the fluid pressure. This difference in area counterbalances the differences in pressure between liquid and gas, thereby balancing the tangential forces acting on the rotor.

Moreover, gas chamber 47 is formed to extend through a greater arc than the liquid chamber 48 so that the areas of rotor exposed to the two pressures are such as to balance these two opposing radial fluid forces acting on the rotor.

Further, as shown in Figure 5, to lessen gas or air consumption the pump chamber 47 is tapered in radial thickness from a minimum at the inlet 49 (which minimum is greater than the radial thickness of chamber 48), growing larger in the direction of rotation towards the outlet 50. This increasing chamber cross section allows the gas to expand between the inlet and exhaust ports i. e., provides "pumping" expansion to thereby convert a larger portion of its total energy into mechanical work.

To prevent pressure gas leakage past the rotor from the chamber 47 into chamber 48 pressure liquid is fed to the surfaces of the rotor through slits 47′ and 48′, the connecting circuit to the pressure side of the liquid circuit being omitted from the illustrations for simplicity.

The above explanation with reference to thermodynamics of the devices of Figures 2 to 6 relates these devices as being equivalent to the system of Figure 1 where the air in cylinder 7 is exhausted against the atmosphere at the expense of its enthalpy. Actually in the motor-pumps of Figures 2 to 6 the two kinds of energy inherent in the gas, namely, the displacement energy and the internal heat energy or enthalpy together, displace the atmosphere to make room for the exhausting air and drive the rotors or turbines.

Here the air expands against the moving blades 39 and 54 in its initial step to exhaust to the atmosphere, thereby converting the enthalpy into work to drive the blades or turbines.

Again it can be shown that this heat taken from the air while passing through the pumps or motors of Figures 2 to 6 is equal to the heat generated in the oil by

fluid and mechanical friction where there is total conversion of liquid hydraulic energy into heat, and so the two heats cancel each other in the heat exchange effected by the thermal association of the rotors and stators or where necessary an external heat exchanger.

If mechanical work is done by the oil in the hydraulic system, say to drive a machine thus lessening the heating of the oil, there will be an excess of cold air which may be by-passed by a temperature-controlled butterfly valve or the like to maintain the oil temperature constant.

In many practical applications it is not possible to have the air drive and the oil circuit themselves thermally associated, and in such a system, as shown in Figure 7 diagrammatically, the exhausting gas and the hydraulic liquid may be brought into thermal association at an external point by means of a heat exchanger **55**.

In Figure 7 the hydraulic circuit **56** corresponding to the circuit **1** of Figure 1 is shown circulating oil through the lines **56** to the load-connecting terminals **57** and thence returning the oil through the heat exchanger **55**. The compressed air or gas system **58** corresponding to the system **5** (see Figure 1) is shown as provided with an air inlet **59** and exhausting through an outlet **60** lead in thermal association through the heat exchanger **55**.

The air system **58** is arranged to be driven by the compressed air introduced through inlet **59** which again has displacement energy and enthalpy. The displacement energy is utilized to drive the oil circuit **56** to impart hydraulic energy to the oil. The compressed air in the air system **58** is exhausted through hte outlet **60** with the energy to exhaust the gas against the atmosphere being derived from the gas enthalpy.

At exhaust the expansion of the air is substantially adiabatic, the air temperature drops and this cold air is led through the heat exchanger **55** into contact with the warm oil. This heat H_e delivered up from the oil to the gas restores its enthalpy and renders the system thermally balanced.

The overall expansion of the air is therefore isothemal with external heat being supplied to the gas to supply energy to exhaust the gas.

Where all of the hydraulic energy of the oil in the oil circuit is converted into heat this heat energy will exactly restore the loss of enthalpy in the previously adiabatically expanded gas now in the heat exchanger. Where the hydraulic load consists of a load which utilizes some of the hydraulic energy in the oil and only part of this energy is returned as heat to the oil the cooling effect available from the exhausting gas from the air system will be more than sufficient to absorb this heat. In this instance therefore a by-pass valve **61** is provided to lead some of the cool expanded gas past the heat exchanger.

A practical example of the system of Figure 7 is illustrated in Figure 8 where **62** represents a double-ended double-acting piston connected to drive the table **63** mounted on the bed **64** of a machine tool illustrated in diagrammatic form. Pressure air is connected to a cylinder **65**, in which one end of the piston operates, through a four-way valve **66** and the movement of this piston **62** pumps oil through a throttling valve **67** and feed line **68** from one end to the other of a cylinder **69** in which the other end of piston **62** operates.

With the four-way valve in the position illustrated in Figure 8 compressed air is delivered to the left-hand end of cylinder **65** to drive the table **63** to the right to pump the oil from the right-hand end of cylnider **69** through the throttling valve **67** to the left-hand end of the cylinder, the throttling valve controlling the table velocity and converting substantially the entire hydraulic energy of the oil into heat.

The gas exhausting from the right-hand end of cylinder **65** is led through a heat exchanger **70** thermally associated with the oil circuit **68**. The exhausting air exhausts against the atmosphere from the cylinder **65** at the expense of its enthalpy and its temperature drops. This cold air led into thermal association with the warm oil in the feed line **68** absorbs the heat from the oil to restore the gas enthalphy to provide an overall isothermal expansion against the atmosphere.

As has been pointed out, in such a situation with the entire hydraulic energy of the oil converted to heat, this entire heat when transferred in the heat exchanger to the exhausting air will exactly balance the heat energy required to exhaust the air to provide an overall thermal balance.

In many practical examples the air system driving the oil circuit is partially thermally associated so that there is a measure of heat transfer but in such a case it is also necessary to bring the oil and air together in the heat exchanger to complete the thermal transfer to extract the heat generated in the hydraulic system.

Figure 9 illustrates diagrammatically a system in which the air and oil portions are partially thermally associated in their driving parts and are further thermally associated by means of a heat exchanger constituting a combination of the systems of Figures 1 and 7.

With reference to Figure 9, **71** represents an oil circuit corresponding to the oil circuit **56** of Figure 7. **72** represents an air circuit or system corresponding to the system **58** and driving the oil circuit **71**. **73** is a line indicating a measure of thermal association between the two circuits **71** and **72**. **74** is a heat exchanger and **75** represents terminals to which the hydraulic load is connected.

Where the hydraulic load is formed in such a way that essentially the entire hydraulic energy is converted into heat, this heat exactly balances the system and restores the loss of enthalpy in the gas as it expands against the atmosphere.

Where the load is such that only a partial conversion of the hydraulic energy is into heat the exhausting gas may in part be by-passed through a by-pass valve **76** to attain the thermal balance.

In operation the displacement energy of the air delivered to the air system **72** is utilized to provide the hydraulic energy to the oil in the system **71**. The gas enthalpy is relied upon to exhaust the gas from the system **72** and this is in part restored by heat transferred at **73**, so that at this point the exhaustion against the atmosphere is neither isothermal nor adiabatic. The air with a lower temperature is then led through the heat exchanger **74** where further thermal association provides the heat from the oil to restore the gas enthalpy and again the overall expansion is isothermal.

Figure 10 represents a practical illustration of the system of Figure 9. Here a double-acting double-ended piston **77** operates in the double-acting cylinders **78** and **79**. The piston is connected to drive a table **80** on the bed **81** of a machine tool illustrated for simplicity in diagrammatic form. Each of the cylinders **78** and **79** is adapted to pump oil under compressed air. With air supplied through a four-way valve **82**, as illustrated, compressed air is delivered to the left-hand end of the right-hand cylinder **79** to drive the oil from the right-hand cylinder through line **83** and throttle valve **84** to the left-hand end of the left-hand cylinder **78**. At the same time the air in the right-hand end of cylinder **78** is exhausted through the four-way valve **82** through a heat exchanger **85** which leads the air into thermal association with the oil forced through the throttling valve **84**.

The walls of the cylinders **78** and **79** thus afford a measure of thermal association between the air and the oil, and the air expanding at the expense of its enthalpy will have a portion of the heat energy thus lost supplied by this thermal association. The remainder of the heat loss will be restored in the heat exchanger to provide the overall isothermal expansion and heat balance between the gas and liquid.

It will be appreciated that such a system as above de-

scribed provides an extremely simple way of eliminating a long-standing and important problem of heat distortion. By utilizing the heat developed in a liquid hydraulic system driven by a compressed gas to restore gas enthalpy the simplest arrangements of equipment to bring the liquid and gas into thermal association is required. The invention thus completely eliminates extensive and cumbersome apparatus for alleviating this annoying problem.

What I claim as my invention is:

1. A compressed gas-driven liquid hydraulic system comprising a closed liquid circulating hydraulic circuit, a compressed gas-driven means imparting hydraulic energy to and circulating the liquid of said circuit, means in said hydraulic circuit dissipating at least a portion of said liquid hydraulic energy as heat, said compressed gas-driven means providing for the expansion of compressed gas at the expense of its enthalpy, and heat transfer means located downstream of said compressed gas driven means to conduct heat created by dissipating said liquid hydraulic energy from the liquid to the expanded gas to restore gas enthalpy to the expanded gas.

2. A compressed gas-driven liquid circulating hydraulic system comprising a closed liquid circulating hydraulic circuit, a compressed gas-driven means imparting hydraulic energy to and driving the liquid of said circuit, and means to provide a thermal balance in said system, said latter means comprising means to expand the compressed gas of said gas-driven means at the expense of its enthalpy, a heat exchanger located downstream of said gas-driven means associating the liquid of said circuit and the expanded gas of said compressed gas driving means to restore the gas enthalpy and to provide an overall isothermal gas expansion and thermal balance between liquid and gas.

3. A compressed gas-driven liquid circulating hydraulic system, comprising a closed liquid hydraulic circuit, a separate compressed gas-driven pump system driving liquid in said system, means to expand and exhaust the compressed gas driving said pump against a lower pressure, and heat exchanging means located downstream from said means to expand and exhaust the compressed gas thermally associating the liquid in said hydraulic circuit and the expanded gas of said compressed gas-driven system to render the overall expansion of said gas substantially isothermal to thereby thermally balance said liquid and gas.

4. A thermally balanced compressed gas-driven liquid circulating hydraulic pumping system comprising a liquid pump, a compressed gas driving said pump expanding against and exhausting to a lower pressure, and heat transfer means located downstream from the point of exhaust of said compressed gas conducting heat from liquid pumped by said pump with the gas driving said pump and expanding against said lower pressure to transfer said heat and render said gas expansion isothermal to thereby thermally balance said liquid and gas.

5. A thermally balanced gas-driven liquid hydraulic system comprising a closed liquid circulating hydraulic system in which liquid hydraulic energy is converted into heat, a separate compressed gas system substantially thermally isolated from and operatively connected to impart hydraulic energy to and circulate the liquid of the aforesaid system, an exhaust system for said compressed gas system affording substantially adiabatic expansion of the gas, and heat exchanger means located downstream from said exhaust system in said compressed gas system affording heat exchange between at least a portion of said adiabatically expanded gas and said liquid hydraulic system to extract heat from said liquid hydraulic system and restore gas enthalpy and give an overall substantially isothermal gas expansion to at least a portion of the gas.

6. A compressed gas-driven liquid circulating hydraulic power system comprising a closed liquid circuit including a pump and a load, the pump being connected to circulate liquid through the load wherein hydraulic energy in the liquid is converted to heat, and a separate compressed gas system comprising a source of compressed gas at ambient temperature, a compressed gas operated motor for driving said pump and an exhaust system leading from said motor for expanding the compressed gas against a lower pressure at the expense of its enthalpy, and heat exchange means arranged downstream from the point of gas expansion linking said exhaust system and said closed liquid hydraulic power circuit and through which the cooled expanded gas and heated liquid is passed, said heat exchanger forming a thermally balancing means to restore and maintain said liquid and gas circuits thermally balanced at ambient temperature.

7. A compressed gas-driven liquid circulating hydraulic power system comprising a closed liquid circuit including a pump and a load, the pump being connected to circulate liquid through the load wherein hydraulic energy in the liquid is converted to heat and a separate compressed gas system comprising a source of compressed gas at ambient temperature, a compressed gas operated means for driving said pump in which power from the compressed gas is transferred to the liquid of the closed liquid circuit, an exhaust system leading from said gas operated means for expanding the compressed gas at the expense of its enthalpy to produce cooling of the gas and heat exchange means located downstream of the point of gas expansion linking said exhaust system and said closed liquid circuit to transfer power from the liquid in said liquid circuit to the exhausting gas in said exhaust system to effect thermal balance between said liquid and gas, such gas-driven liquid circulating hydraulic power system automatically providing a thermal balance to maintain said power system at ambient temperature.

References Cited in the file of this patent

UNITED STATES PATENTS

15,597	Ariail	Aug. 26, 1856
165,623	Smethells	July 13, 1875
413,830	Nichols	Oct. 29, 1889
767,028	Wood	Aug. 9, 1904
808,898	Cates	Jan. 2, 1906
1,254,358	Rinehart	Jan. 22, 1918
1,296,356	Bey	Mar. 4, 1919
1,943,908	Woods	Jan. 16, 1934
2,166,940	Conradson	July 25, 1939
2,422,357	LeTourneau	June 17, 1947
2,498,910	Camfield	Feb. 28, 1950
2,573,993	Sedgwick	Nov. 6, 1951

FOREIGN PATENTS

163,004	Germany	Sept. 20, 1905
111,185	Switzerland	Aug. 1, 1925
617,377	France	Nov. 19, 1926