May 19, 1925. 1,538,851

H. J. GOSS

ASSEMBLING MECHANISM FOR BOX MAKING MACHINES

Filed June 5, 1924

Fig. 3.

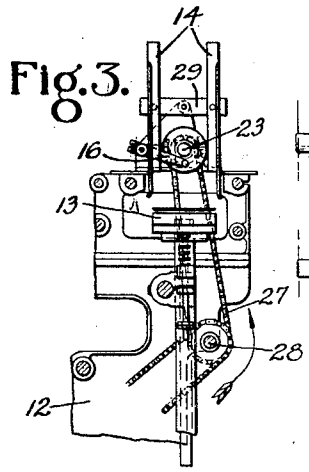

Fig. 4.

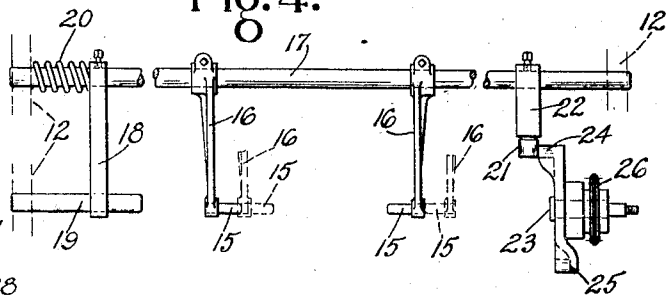

Fig. 2.

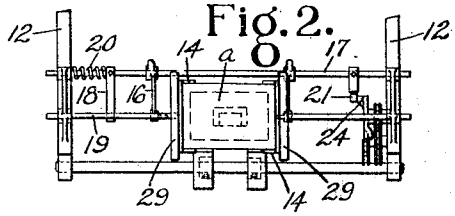

Fig. 5.

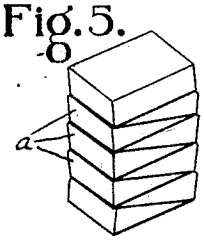

Fig. 6.

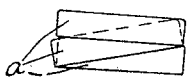

Fig. 1.

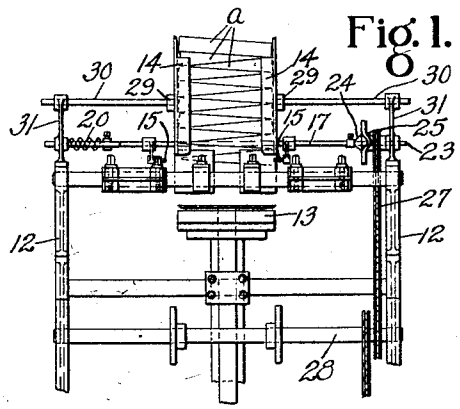

INVENTOR.
HAROLD J. GOSS.
BY A. W. Harrison
ATTORNEY

Patented May 19, 1925. 1,538,851

UNITED STATES PATENT OFFICE.

HAROLD J. GOSS, OF NASHUA, NEW HAMPSHIRE, ASSIGNOR TO THE LAKE ERIE TRUST COMPANY, OF CLEVELAND, OHIO, A CORPORATION OF OHIO.

ASSEMBLING MECHANISM FOR BOX-MAKING MACHINES.

Application filed June 5, 1924. Serial No. 718,147.

To all whom it may concern:

Be it known that I, HAROLD J. GOSS, a citizen of the United States, and resident of Nashua, in the county of Hillsboro and State of New Hampshire, have invented certain new and useful Improvements in Assembling Mechanism for Box-Making Machines, of which the following is a specification.

This invention relates to the manufacture of paper board boxes and has particular reference to machines for making rectangular boxes in set up form, ready to have goods placed therein, or for making the cover members of such boxes. Boxes of this type are referred to as wall boxes for the reason that they present upright side portions which serve as walls to retain goods.

Machines for making this type of box are illustrated in Letters Patent No. 1,445,940, issued to me February 20, 1923, and in applications Serial No. 610,143, filed January 2, 1923 and Serial No. 647,849, filed June 26, 1923. Such machines fold blanks and complete the making of the boxes while pushed up through a forming chamber by a plunger, the boxes being delivered from the top of said chamber in inverted positions or, in other words, with the side walls extending downwardly.

The object of the present invention is to provide such machines with means for assembling the finished boxes, as they are delivered by the plunger, in such manner that a pile of them can accumulate before there is any necessity for removing them, instead of delivering them singly into some receptacle, or manually removing them singly. The mechanism which I have provided for accomplishing this object, so nests the boxes that although they are uniform in size and have parallel walls a large number of them will remain interengaged during removal as a pile, by an attendant, ready for storage or shipment.

With the above-stated object in view, the invention consists in the construction and combination of parts substantially as hereinafter described and claimed.

Of the accompanying drawings:—

Figure 1 is an end elevation of so much of the machine as is necessary to explain the present invention.

Figure 2 is a plan view of the same.

Figure 3 is a side elevation, partly in section.

Figure 4 is a plan view of some of the parts shown by Figure 2, on a larger scale, and indicating different positions of the two pushing fingers by full and dotted lines.

Figures 5 and 6 are views illustrating the nested condition of the boxes as they issue from the machine.

Similar reference characters indicate similar parts in all of the views, the boxes being indicated at *a*.

A portion of the frame of such a machine as hereinbefore referred to is indicated at 12, the vertically movable plunger being illustrated at 13. For present purposes it will be unnecessary to illustrate or describe the mechanism which cooperates with the plunger in completing the making of the boxes.

Each completed box is delivered by the plunger between upright pile-holding guides 14 suitably supported by the frame. Any suitable mechanism such as shown in the patent or applications referred to, may be employed for preventing each finished box from descending from the guides 14 when the plunger moves down.

To nest the boxes as illustrated by Figures 5 and 6, they are slightly shifted alternately in opposite directions. That is, one is pushed to the right and the next to the left, and so on. The amount of shifting need be but slight since the object is to slip one end of each box into the preceding one while the bottom at the other end bears against the edge of the wall of the preceding box, as best illustrated by Figure 6. It is to be understood that the use of the word "end" is for convenience of description only. The portion of each box which fits within the preceding box may be either of the four wall portions.

The shifting is effected by two fingers 15 carried by arms 16 adjustably fixed to a slide rod 17 mounted in suitable bearings in the frame of the machine, said rod having also an arm 18 which rides on a fixed pin 19 to ensure the operation of the fingers in the proper plane. A spring 20 acts to urge the rod 17 and the fingers 15 toward the right in Figures 1 and 4, and to cause the roll 21 of the arm 22 which is connected to the slide rod to main-

tain contact with the face cam carried by shaft 23. Said cam is duplex; that is, it has a raised cam 24 and a depressed cam 25. Its shaft 23 carries a sprocket 26 connected by a chain 27 with a sprocket carried by a lower shaft 28.

The timing of operation of the cam shaft is such that it rotates once for each two boxes raised by the plunger. When the raised cam 24 (Fig. 4) acts on the roll 21, it causes the slide rod 17 to shift to the left, against the action of spring 20, and both fingers 15 move to the left so that the right-hand finger 15 contacts with the wall of the box which has just been lifted to the plane of the fingers, and shifts that box slightly to the left. By the time the next box is lifted to that plane, the cam disk has been rotated half way so that the depressed cam 25 is opposite the roll 21 and the spring 20 then shifts the slide rod to the right so that the fingers move to the positions indicated by the dotted lines in Figure 4, the left-hand finger then shifts said next box slightly to the right. As the boxes are successively pushed up between the guides 14 they automatically become interengaged as indicated in Figures 1, 5 and 6. The pile may extend considerably above the top of the guides 14 without toppling over. When there are enough in the pile to require removal, an attendant can readily effect it, as by grasping opposite sides of the pile at or near the bottom thereof and sliding the pile up between and from the guides.

In machines of the character hereinbefore referred to, it is customary to provide for adjustment of the parts so as to make boxes of different sizes and shapes. Therefore it is desirable that the parts of the nesting mechanism shall be adjustable. To this end, the guides 14 are in pairs, each pair being adjustably connected to a cross bar 29 (Figs. 2 and 3) carried by the inner end of a rod 30 which is adjustable in the direction of its length as by means of bearings in a bracket 31 rising from each side member of the frame 12 (Fig. 1).

The space between the guides 14 constitutes a throat into which the boxes *a* are successively pushed by the plunger, and the fingers 15 and their actuating mechanism constitute means for alternately shifting the boxes in opposite directions as they enter the throat so that said boxes are automatically assembled in the nested condition indicated by Figures 5 and 6.

The reason why the boxes will nest as illustrated and described is that they are not made of material that is so stiff as to be practically rigid. The material is sufficiently flexible to permit the side walls to yield slightly outwardly when an end portion of the next box is pushed into it.

Having now described my invention, I claim:—

1. Mechanism for assembling boxes, comprising a throat, means for successively pushing boxes into said throat, and means for alternately shifting the boxes in opposite directions as they enter said throat.

2. A machine of the character described, having a plunger, a throat or guideway for receiving boxes pushed thereinto by the plunger, and means operable in a direction substantially at a right angle to the direction of movement of the plunger for alternately shifting the boxes in opposite directions in said throat or guideway.

3. A machine of the character described, having a plunger, a throat for receiving boxes pushed thereinto by the plunger, a pair of fingers spaced apart a greater distance than the dimensions of the boxes, and means for actuating said fingers to alternately shift the boxes in opposite directions in said throat.

4. Mechanism for assembling boxes, comprising a guideway for a succession of boxes having parallel walls, means for pushing the boxes into said guideway, and means for nesting the boxes in alternating inclined relationship in said guideway.

5. Mechanism for assembling boxes, comprising a guideway for a succession of boxes, means for pushing the boxes into said guideway, a slide having fingers at opposite sides of the guideway, and means for shifting the slide and its fingers in one direction to act on one box and in the opposite direction to act on the next box.

6. Mechanism as specified in claim 5, the shifting means comprising a cam disk having a raised portion and a depressed portion, the slide having an arm acted upon by the cam disk, and a spring to maintain said arm in contact with the cam disk.

In testimony whereof I have affixed my signature.

HAROLD J. GOSS.