(12) INTERNATIONAL APPLICATION PUBLISHED UNDER THE PATENT COOPERATION TREATY (PCT)

(19) World Intellectual Property Organization
International Bureau

(43) International Publication Date
10 September 2020 (10.09.2020)

WIPO | PCT

(10) International Publication Number
WO 2020/176922 A1

(51) International Patent Classification:
*G06K 19/067* (2006.01) *G06Q 20/34* (2006.01)
*G06K 19/07* (2006.01) *G06K 19/08* (2006.01)

(21) International Application Number:
PCT/AU2020/050144

(22) International Filing Date:
20 February 2020 (20.02.2020)

(25) Filing Language: English

(26) Publication Language: English

(30) Priority Data:
2019900663 01 March 2019 (01.03.2019) AU

(72) Inventor; and
(71) Applicant: **BUTTRISS, Jeremy** [AU/AU]; c/- Patent Patent Attorneys, L11, 65 York St, Sydney, New South Wales 2000 (AU).

(74) Agent: **PATENTEC PATENT ATTORNEYS**; L11, 65 York St, Sydney, New South Wales 2000 (AU).

(81) Designated States *(unless otherwise indicated, for every kind of national protection available)*: AE, AG, AL, AM, AO, AT, AU, AZ, BA, BB, BG, BH, BN, BR, BW, BY, BZ, CA, CH, CL, CN, CO, CR, CU, CZ, DE, DJ, DK, DM, DO, DZ, EC, EE, EG, ES, FI, GB, GD, GE, GH, GM, GT, HN, HR, HU, ID, IL, IN, IR, IS, JO, JP, KE, KG, KH, KN, KP, KR, KW, KZ, LA, LC, LK, LR, LS, LU, LY, MA, MD, ME, MG, MK, MN, MW, MX, MY, MZ, NA, NG, NI, NO, NZ, OM, PA, PE, PG, PH, PL, PT, QA, RO, RS, RU, RW, SA, SC, SD, SE, SG, SK, SL, ST, SV, SY, TH, TJ, TM, TN, TR, TT, TZ, UA, UG, US, UZ, VC, VN, WS, ZA, ZM, ZW.

(84) Designated States *(unless otherwise indicated, for every kind of regional protection available)*: ARIPO (BW, GH, GM, KE, LR, LS, MW, MZ, NA, RW, SD, SL, ST, SZ, TZ, UG, ZM, ZW), Eurasian (AM, AZ, BY, KG, KZ, RU, TJ, TM), European (AL, AT, BE, BG, CH, CY, CZ, DE, DK, EE, ES, FI, FR, GB, GR, HR, HU, IE, IS, IT, LT, LU, LV, MC, MK, MT, NL, NO, PL, PT, RO, RS, SE, SI, SK, SM, TR), OAPI (BF, BJ, CF, CG, CI, CM, GA, GN, GQ, GW, KM, ML, MR, NE, SN, TD, TG).

**Published:**
— *with international search report (Art. 21(3))*

(54) Title: A MULTI-ACCOUNT INFORMATION BEARING CARD

(57) Abstract: A multi-account information bearing card has first and second computer readable media. Each of the first and second computer readable media has separate account information stored therein. The first and second computer readable media can be positioned on the card to selectively make contact with a computer reader to read the respective account information stored therein.

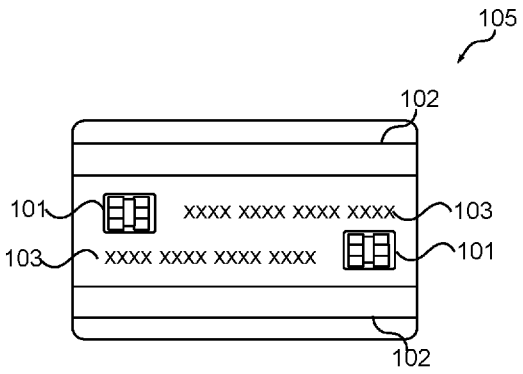


Figure 4

WO 2020/176922 A1

# A multi-account information bearing card

## Field of the Invention

[1] This invention relates generally to a multi-account information bearing card.

## Background of the Invention

[2] Multi-account information bearing cards, such as bankcards, loyalty cards and the like of various configurations exist, including that disclosed in US 2016/0180210 A1 (CHRISTOPHER STEELE SPEARS) 23 June 2016 which discloses a pushbutton enabled contactless transmitting device having a number of smart microchips that may be selectively switched in to determine the data transmitted through an antenna.

[3] WO 2008/127044 A1 (HAREX INFOTECH INC. et al.) 23 October 2008 similarly discloses a contactless card having first and second memory microchips for storing different data and respective antenna which may be selectively switched in.

[4] US 2016/0315931 A1 (NETTOKEN LIMITED) 27 October 2016 further similarly discloses a contactless communication device having a rotation type selection means for selectively activating one of a number of microchips.

[5] US 10026078 B1 (NOLAN) 17 July 2018 discloses a processor for which account information may be wirelessly configured.

[6] The present invention seeks to provide alternatives, which will overcome or substantially ameliorate at least some of the deficiencies of the prior art, or to at least provide an alternative.

[7] It is to be understood that, if any prior art information is referred to herein, such reference does not constitute an admission that the information forms part of the common general knowledge in the art, in Australia or any other country.

## Summary of the Disclosure

[8] There is provided herein a multi-account information bearing card having a number of computer readable media thereon which can be positioned to selectively make contact with a computer reader to selectively read account information stored therein.

[9] As such, unlike the aforedescribed prior art, the present card may be used to selectively contact readers such as contact microchip readers and magnetic strip readers of ATMs, POS devices and the like.

[10] The computer readable media may be fixed in position so as to selectively make contact with the computer reader depending on the orientation of the card. For example,

in one manner, the card may be rotated about the same face to expose a contact microchip for reading at either end or a magnetic strip at either side.

[11] In a further manner, the card may be flipped over to the opposite face to similarly expose a contact microchip or a magnetic strip for reading.

[12] In embodiments, the card may comprise four computer readable media each of which may be selectively read by the contact reader by flipping the card over to an opposite face and rotating the card about the same face. In embodiments, the card may comprise four contact microchips and four magnetic strips respectively positioned such that each may be selectively used depending on the orientation of the card.

[13] The card may comprise visible information printed thereon, such as account information displayed in an appropriate orientation with respect to the computer readable media to provide visual orientation referencing for insertion or swiping.

[14] In embodiments the computer readable media may slide with respect to a body of the card between first and second positions to selectively expose the computer readable media for reading by the contact reader. For example, in one embodiment, the card may comprise a sideways channel having adjacent contact microchips slidably retained therein which may be slid to either end of the channel to selectively expose one of the contact microchips for reading by the contact reader.

[15] In accordance with this embodiment, the card may comprise up to eight separate accounts held by eight separate contact microchips in four channels at opposite ends and faces of the card wherein each microchip may be selected for contact reading by sliding the microchips within the channels and controlling the orientation of the card.

[16] In embodiments the card may comprise an internal slidable carrier within the body of the card which selectively exposes visible account information or a respective magnetic strip depending on the position of the carrier. As such, the card may similarly allow utilisation of up to 8 magnetic strips depending on the position of the carrier and orientation of the card.

[17] In embodiments the card may comprise an antenna operably coupled to a pickup which locates beneath either of the contact microchips depending on the respective position of the contact microchips with respect to the body. The pickup may form an electrical contact or inductive pick up with the respective contact microchip thereabove. As such, depending on the respective position of the slidable contact microchips with respect to the pickup, the card may be used for wireless payments with different accounts.

[18] Other aspects of the invention are also disclosed.

## Brief Description of the Drawings

[19] Notwithstanding any other forms which may fall within the scope of the present invention, preferred embodiments of the disclosure will now be described, by way of example only, with reference to the accompanying drawings in which:

[20] Figures 1 and 2 show a multi-account information bearing card having a plurality computer readable media on opposite faces thereof in accordance with a first embodiment;

[21] Figure 3 shows a multi-account information bearing card having a plurality of computer readable media on a same face thereof in accordance with a further embodiment;

[22] Figures 4 and 5 show opposite faces of a multi-account information bearing card wherein each face comprises a plurality of computer readable media thereon in accordance with a yet further embodiment;

[23] Figures 6 and 7 show opposite faces of a multi-account information bearing card wherein the computer readable media are slidable with respect to a body of the card in accordance with a further embodiment;

[24] Figure 8 shows a face of a multi-account information bearing card wherein magnetic strips of selectively exposed via a window in accordance with an embodiment;

[25] Figure 9 shows a magnified view of the embodiment of Figures 6 and 7 in accordance with a further embodiment wherein the card comprises an internal slidable carrier;

[26] Figure 10 shows a wireless multi-account of information bearing card in accordance with an embodiment;

[27] Figure 11 shows a multi-magnetic strip card in accordance with an embodiment; and

[28] Figure 12 shows a slide out member for a multi-account information bearing card in accordance with an embodiment.

## Description of Embodiments

[29] Figures 1 and 2 show a multi-account information bearing card 100 in accordance with a first embodiment. The card 100 comprises a generally rectangular planar plastic body having computer readable media thereon.

[30] The computer readable media of the card 100 may comprise a contact microchip 100 having electrical contacts thereon which make electrical contact with a contact reader such as a reader of an ATM, POS device or the like.

[31] The computer readable media of the card 100 may additionally or alternatively comprise a magnetic strip 102 running longitudinally along the body of the card 100.

[32] The computer readable media stores account information therein which may be utilised for processing financial transactions, redeeming loyalty rewards, credit and the like.

[33] The card 100 may further comprise a visible account number 102, typically embossed across a face of the card 100.

[34] In accordance with the first embodiment shown in Figures 1 and 2, the card 100 defines first and second faces and the computable readable media is located on opposite faces such that, in use, the card may be flipped over to an opposite face to selectively position the computer readable media to be alternatively read by a computer reader.

[35] Specifically, Figure 1 may show the first face of the card 100 comprising a contact microchip 101 thereon comprising account information corresponding to the visible account number 103 displayed thereon.

[36] The card 100 may be inserted with the first face up such that the contact microchip 101 makes electrical contact with the computer reader. However, to utilise the second account, the card 100 can be flipped over to the opposite face of Figure 2 such that, when the card is 100 inserted into the computer reader in the orientation of Figure 2, the account information borne by the second contact microchip 101 (corresponding to the visible account number 103 displayed on the second face) may be read by the contact computer reader.

[37] Additionally, or alternatively, the computer readable media may comprise magnetic strips 102 such that the card 100 may be swiped through a magnetic stripe computer reader on either face to utilise either account information.

[38] Figure 3 shows a further embodiment of a card 104 comprising the computer readable media on the same face of the card. Similarly, the computer readable media may comprise a contact microchip 101 and/or a magnetic strip 102. As such, in accordance with the configuration shown in Figure 3, alternative utilisation of each account may comprise rotating the card around in the same face to utilise the different account information.

[39] For example, the computer readable media may comprise a first contact microchip 101 (on the left-hand side of the card 104 given the orientation of Figure 3) and the visible account information 103 associated therewith may be displayed adjacent the contact microchip 101 in the correct orientation (reading left and right given the orientation of D3).

[40] As such, the card 104 may be inserted at a first end (the left-hand side given the orientation of Figure 3) such that the first contact microchip 101 is read by the computer reader.

[41] To access the second account information, the card 104 may be rotated about the same face and inserted with the opposite end first (i.e., the right-hand side of the card 104 given the orientation of Figure 3) such that the opposite contact microchip 101 may be read

by the computer reader. Similarly, a second visible account number 103 may be displayed in the appropriate orientation with respect to the second contact 101 to assist the appropriate orientation of the card 104 for insertion.

[42] Similarly, the card 104 may comprise magnetic strips 102 on the same face which may similarly be alternatively utilised a rotating the card 104 about the same face. In an embodiment, the card 104 may comprise the contact microchips 101 on one face and the magnetic strips 102 on the opposite face.

[43] Figures 4 and 5 show an embodiment wherein the card 105 comprises four computer readable media allowing utilisation of up to four accounts by rotating the card about the same face and flipping the card over to an opposite face.

[44] Specifically, Figure 4 shows a first face of the card comprising first and second computer readable media (which may comprise a contact microchip 103 and or magnetic strip 102). The first face may similarly comprise the appropriately orientated visible account number 103 indicating the correct orientation for insertion of the card 105. As such, by rotating the card 105 by the same face, the account information held by the computer readable media shown in Figure 4 may be alternatively utilised.

[45] To utilise the third and fourth account information, the card may be flipped over to the opposite face is shown in Figure 5 and alternatively inserted either end first or swiped along either side to access the account information held by the third and fourth computer readable media.

[46] Figures 6 – 9 show an embodiment of a card 106 wherein the computer readable media slide with respect to a body 123 of the card to selectively position each computer readable media to contact the computer reader.

[47] The embodiment of Figures 6 and 7 show the body 123 comprising a sideways channel 108 comprising a pair of adjacent contact microchips 101 slidably retained therein.

[48] As such, in the manner shown in Figure 6, the microchips 101 may be slid to the lower end of the channel 108 such that the uppermost microchip 101 is in position to be read by the computer reader.

[49] Alternatively, in the manner shown in Figure 7, the microchips 101 may be slid to the upper end of the channel 108 such that the lowermost microchip 101 is in position to be read by the computer reader.

[50] Figure 9 shows an embodiment wherein the body 123 encloses a slidable carrier 111 therein.

[51] In embodiments, an end of the card 106 may comprise a recess 124 through which a tab 110 is exposed to slide the carrier 111 up and down.

[52] The carrier 111 may carry the microchips 101 thereon to selectively position each microchip 101 appropriately for contact by the computer reader.

[53] In embodiments, the carrier 111 may comprise separate visible account numbers 103 displayed thereon and the body 123 may comprise a window 107 to selectively display one of the visible account numbers 103 depending on the position of the carrier 111.

[54] As such, when the first contact microchip 101 is in position for reading by the computer reader, the associated account number 103 is visible within the window 107 and when the second contact microchip 101 is in position for reading by the computer reader, the associated account number 103 is alternatively visible within the window 107.

[55] With reference to Figure 8, the carrier 111 may carry first and second magnetic strips 102 which are selectively positioned for reading. In embodiments, the body 123 may comprise a window 103 for exposing one of the magnetic strips 102 therethrough for selective reading by the magnetic strip reader.

[56] Figure 10 shows an embodiment wherein a card 111 comprises an NFC antenna 113 and wherein a pickup 114 is located within the channel 108 such that each microchip 101 alternatively lies over the pickup 114.

[57] Each microchip 101 may make electrical contact or be inductively coupled with the pickup 114 so as to be operably coupled to the antenna 113. As such, in accordance with this embodiment, depending on the position of the contact microchips 101 within the channel 101, the card 112 may be used for contactless payment with different account information.

[58] Figure 11 shows an embodiment wherein the card 115 comprises a flexible sleeve 116, such as plastic wrapped about the body 123 of the card 115. The sleeve 160 may comprise a flexible material such as thin-film plastic. The sleeve 116 may comprise a plurality of magnetic strips 112 located longitudinally therealong and wherein the sleeve may be rotated around the body 123 of the card 115 to selectively expose one of the magnetic strips 102 at the edge of the card for reading by the magnetic strip reader.

[59] In embodiment shown in Figure 11, the card 115 comprises three magnetic strips 112 each of which may be selectively positioned at the edge of the card 115 for reading.

[60] In embodiments, the sleeve 116 may comprise folds or scores 117 which slightly catch an edge of the card 115 to exactly position the respective magnetic strip 102.

[61] In embodiments, the body 123 of the card may display respective visible account numbers 103 for each magnetic strip 102 and the sleeve 116 may be non-transparent yet comprise a transparent window which locates over the respective account number 103 depending on the relative position of the sleeve 116 with respect to the body 123 of the card 115, thereby indicating which magnetic strip 102 is currently in position for reading.

[62] Figure 12 shows an embodiment wherein a card comprises a slide out member 118 having a first surface 120 and a lower surface 121.

[63] The slide out member 118 may be longitudinally keyed within the body 123 of the card such that the slide out member 118 can slide out from an edge of the card, be flipped over to an opposite surface and reinserted. Each surface 120, 121 may comprise a separate magnetic strip 102 or contact microchip 101.

[64] As such, to switch from account information held by a magnetic strip 102 or contact microchip 101 on the first surface 120 of the slide out member 118 to account of information held by a magnetic strip 102 or contact microchip 101 on the second surface 121 of the slide out member 118, the slide out member 118 may be slid out from an edge of the card, flipped over to the opposite side and reinserted to thereby expose the second surface 121 for contact reading.

[65] The foregoing description, for purposes of explanation, used specific nomenclature to provide a thorough understanding of the invention. However, it will be apparent to one skilled in the art that specific details are not required in order to practise the invention. Thus, the foregoing descriptions of specific embodiments of the invention are presented for purposes of illustration and description. They are not intended to be exhaustive or to limit the invention to the precise forms disclosed as obviously many modifications and variations are possible in view of the above teachings. The embodiments were chosen and described in order to best explain the principles of the invention and its practical applications, thereby enabling others skilled in the art to best utilize the invention and various embodiments with various modifications as are suited to the particular use contemplated. It is intended that the following claims and their equivalents define the scope of the invention.

[66] The term “approximately” or similar as used herein should be construed as being within 10% of the value stated unless otherwise indicated.

## Claims

1. A multi-account information bearing card comprising first and second computer readable media, each having separate account information stored therein and wherein the first and second computer readable media can be positioned to selectively make contact with a computer reader to read the respective account information stored therein.

2. A multi-account information bearing card as claimed in claim 1, wherein the computer readable media comprise separate contact microchips which can be positioned to selectively make electrical contact with the computer reader.

3. A multi-account information bearing card as claimed in claim 1, wherein the computer readable media comprise separate magnetic strips which can be positioned to selectively make electromagnetic contact with the computer reader.

4. A multi-account information bearing card as claimed in claim 1, wherein the first and second computer readable media are each fixed in position on a surface of the card such that, when the card is in a first orientation, the first computer readable media makes contact with the computer reader and, when the card is in a second orientation, the second computer readable media makes contact with the computer reader.

5. A multi-account information bearing card as claimed in claim 4, wherein the card defines first and second faces and wherein the first and second computer readable media are on the first face such that positioning the computer readable media to selectively make contact with the computer reader comprises turning the card around on the same face.

6. A multi-account information bearing card as claimed in claim 5, wherein each computer readable media comprises a contact microchip and wherein the card is rectangular, thereby defining opposite ends and wherein each contact microchip is located at each respective opposite end on the first face.

7. A multi-account information bearing card as claimed in claim 6, wherein each computer readable media comprises a longitudinally running magnetic strip each located adjacent the respective side of the card on the first face.

8. A multi-account information bearing card as claimed in claim 6, wherein each computer readable media comprises a longitudinally running magnetic strip each located adjacent the respective side of the card on the second face.

9. A multi-account information bearing card as claimed in claim 4, wherein the card defines first and second faces and wherein the first computer readable media is on the first face and a second computer readable media is on the second face such that positioning the

computer readable media to selectively make contact with the computer reader comprises flipping the card over to an opposite face.

10. A multi-account information bearing card as claimed in claim 9, wherein each computer readable media comprises a contact microchip and wherein the card is rectangular, thereby defining first and second ends and wherein each contact microchip is located at the first end on the first and second faces respectively.

11. A multi-account information bearing card as claimed in claim 9, wherein each computer readable media comprises a longitudinally running magnetic strip each located adjacent a respective side of the card on the first and second faces of the card respectively.

12. A multi-account information bearing card as claimed in claim 4, further comprising third and fourth computer readable media each having further separate account information stored therein and wherein the third and fourth computer readable media can be positioned to alternatively make contact with the computer reader to read the respective account information stored thereon.

13. A multi-account information bearing card as claimed in claim 12, wherein the computer readable media comprises four contact microchips and wherein the card is rectangular, thereby defining opposite ends and wherein the card defines first and second faces and wherein the contact microchips are located at opposite ends on either face such that positioning the computer readable media to selectively make contact with the four contact microchips comprises turning the card around on the same face and flipping the card over to an opposite face.

14. A multi-account information bearing card as claimed in claim 12, wherein the computer readable media comprises four magnetic strips and wherein the card defines first and second faces and wherein a pair of magnetic strips is located on each of the first and second faces respectively adjacent respective edges such that positioning the magnetic strips to selectively make contact with the four magnetic strips turning card around on the same face and flipping the card over to an opposite face.

15. A multi-account information bearing card as claimed in claim 1, wherein the computer readable media slide with respect to a body of the card between first and second positions and wherein, in the first position, the first computer readable media makes contact with the computer reader and, in the second position, the second computer readable media makes contact with the computer reader.

16. A multi-account information bearing card as claimed in claim 15, wherein the computer readable media comprise adjacent contact microchips slidably retained within a

sideways channel and wherein each microchip is selectively positioned for reading by the reader depending on the position of the microchips within the channel.

17. A multi-account information bearing card as claimed in claim 16, wherein the adjacent contact microchips are located on a carrier slidably retained with respect to the body and wherein the carrier exposes a tab via an edge of the card for sliding the microchips within the channel.

18. A multi-account information bearing card as claimed in claim 16, wherein the adjacent contact strips are located on a carrier slidably retained with respect to the body and wherein the carrier comprises first and second respective visible account information and wherein the body comprises a window and wherein the first and second respective visible account information is selectively visible through the window depending on the position of the carrier microchips within the channel.

19. A multi-account information bearing card as claimed in claim 15, further comprising a carrier slidably retained with respect to the body and wherein the carrier comprises first and second magnetic strips and wherein the either of the first and second magnetic strips are positioned for reading at a side of the card for reading.

20. A multi-account information bearing card as claimed in claim 19, wherein the body comprises a window and wherein the first and second magnetic strips are selectively exposed through the window for contact reading.

21. A multi-account information bearing card as claimed in claim 15, wherein the computer readable media comprises eight contact microchips, each pair of which is slidably retained within four respective channels and wherein the card defines first and second faces and is rectangular thereby defining opposite ends and wherein each face comprises a channel running sideways there along at each end such that one of the eight microchips may be positioned for reading by the contact reader by adjusting the position of the pairs of contact microchips within the channels and controlling the orientation of the card.

22. A multi-account information bearing card as claimed in claim 15, further comprising eight magnetic strips on a carrier which move with the eight contact microchips such that one of the eight magnetic strips may be positioned for reading by adjusting the position of the pairs of contact microchips within the channels and controlling the orientation of the card.

23. A multi-account information bearing card as claimed in claim 1, wherein the card comprises visible information for each computer readable media and wherein each visible

information is displayed in an orientation with respect to the respective computer readable media.

24. A multi-account information bearing card as claimed in claim 16, wherein the card comprises a pickup located within the channel, the pickup connected to an antenna and wherein the pickup is operably coupled to one of the contact microchips thereabove depending on the position of the contact microchips within the channel such that the card wirelessly transmit account information held by the contact microchip thereabove.

25. A multi-account information bearing card as claimed in claim 24, wherein the contact microchip thereabove makes electrical contact with the pickup.

26. A multi-account information bearing card as claimed in claim 24, wherein the contact microchip thereabove inductively coupled with the pickup.

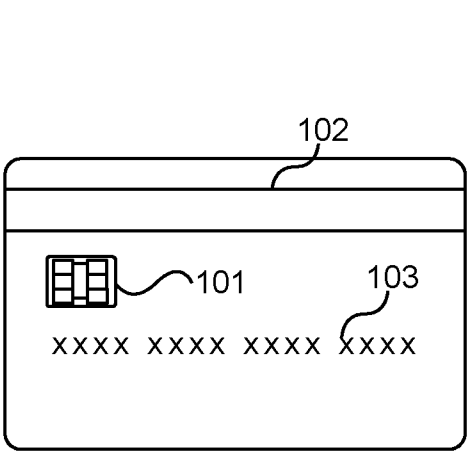


Figure 1

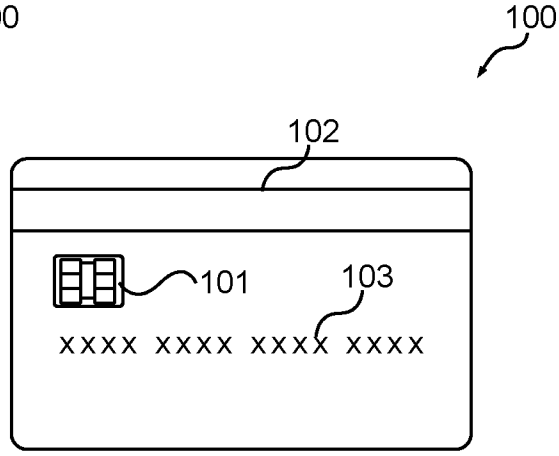


Figure 2

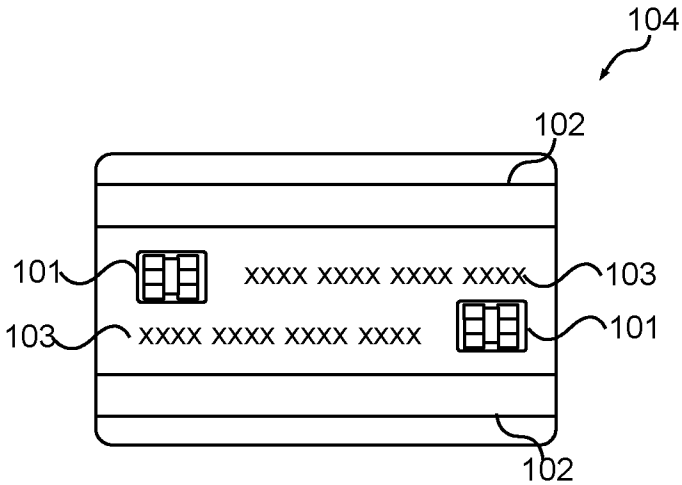


Figure 3

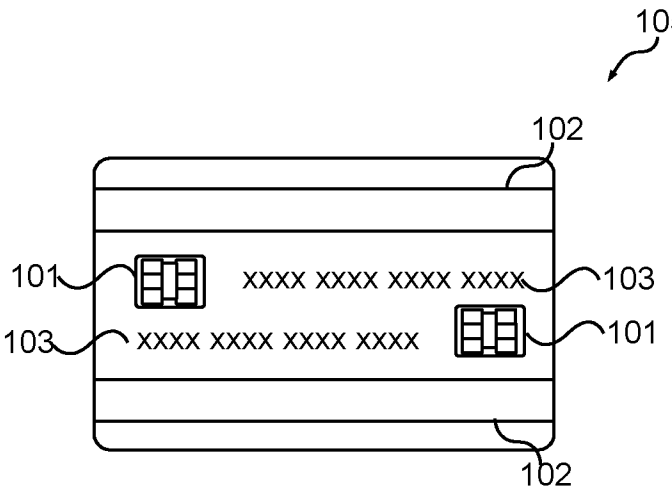


Figure 4

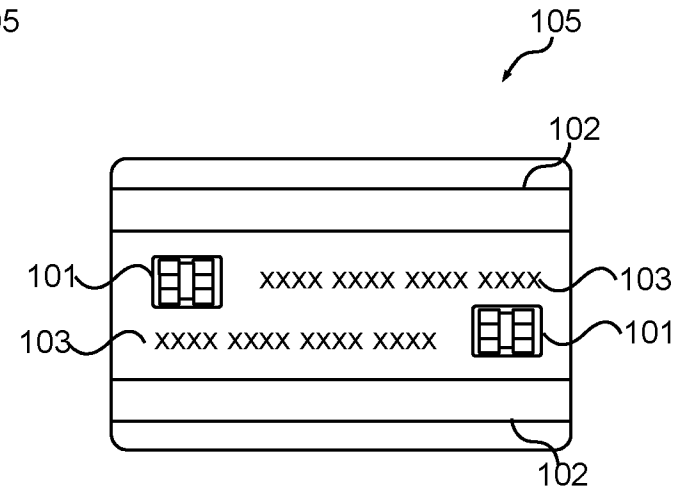


Figure 5

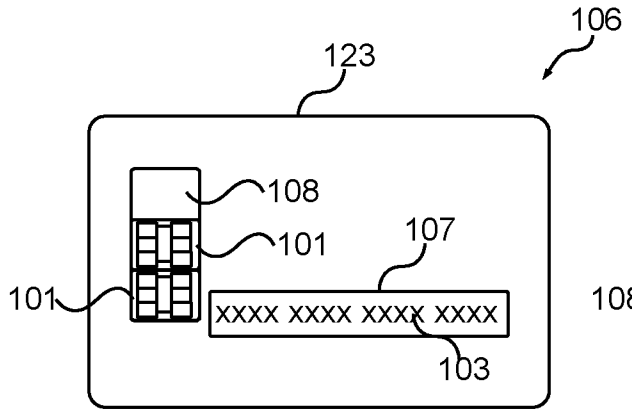


Figure 6

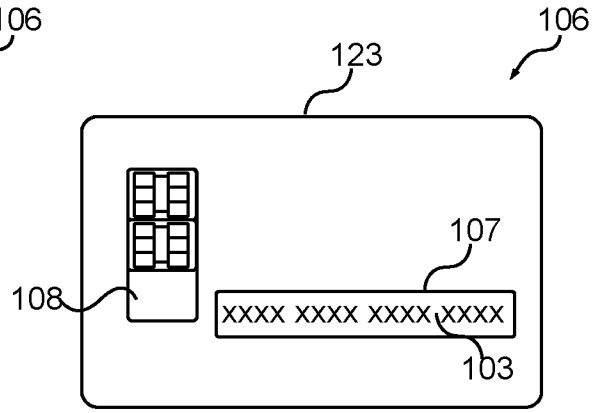


Figure 7

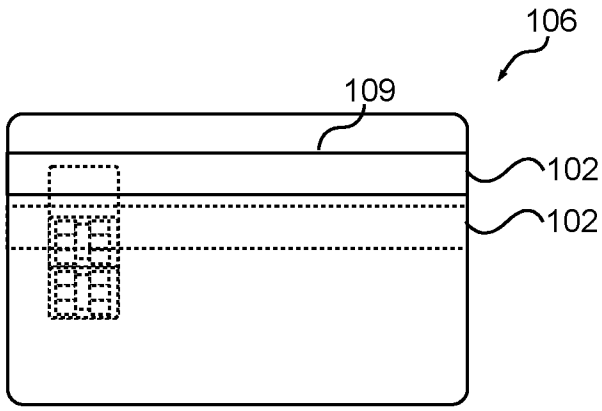


Figure 8

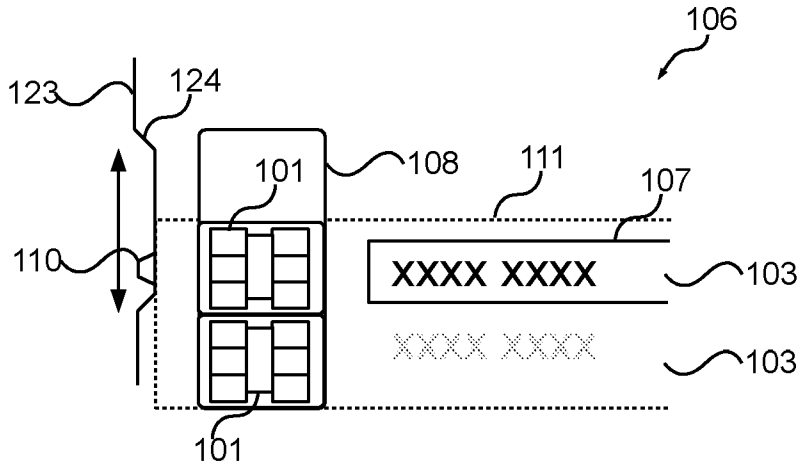


Figure 9

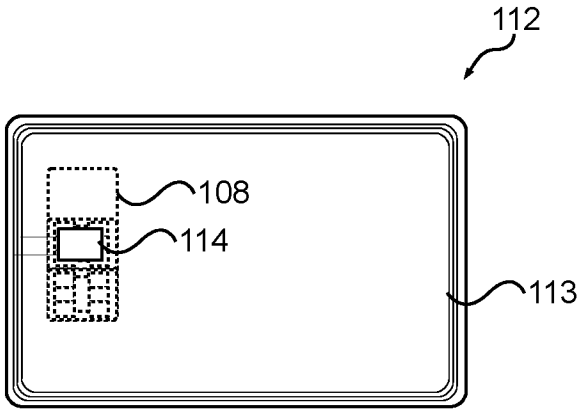


Figure 10

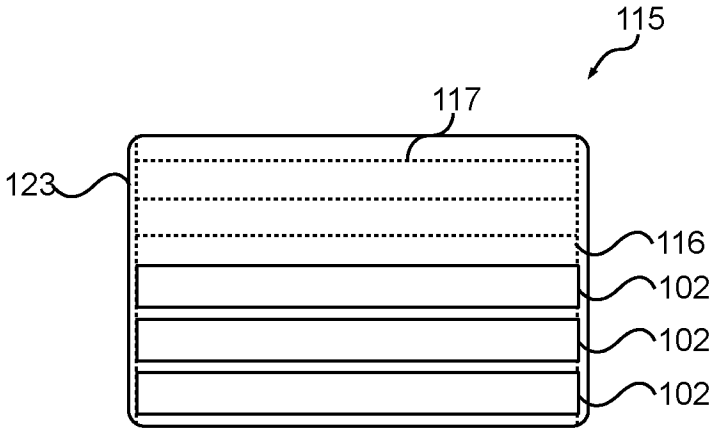


Figure 11

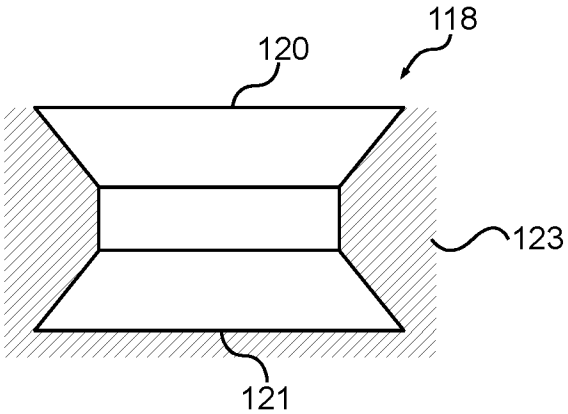


Figure 12

**INTERNATIONAL SEARCH REPORT**

International application No.
**PCT/AU2020/050144**

A. CLASSIFICATION OF SUBJECT MATTER

***G06K 19/067 (2006.01) G06K 19/07 (2006.01) G06Q 20/34 (2012.01) G06K 19/08 (2006.01)***

According to International Patent Classification (IPC) or to both national classification and IPC

B. FIELDS SEARCHED

Minimum documentation searched (classification system followed by classification symbols)

Documentation searched other than minimum documentation to the extent that such documents are included in the fields searched

Electronic data base consulted during the international search (name of data base and, where practicable, search terms used)

Databases: PATENW, Google Patents, Google Scholar.

Keywords: bankcard, credit, debit, card, smartcard, plurality, multiple, chip, module, strip, microchip, account, flip, rotate, slide, glide, select, choose, multi-account, multi-chip and similar terms.

IPC/CPC marks: G06K19/072/low, G06Q20/3572, G06Q20/3576, G06Q20/227, G06K19/067, G06K19/07, G06K19/0723, G06Q20/34, G06K19/06187, G06K19/08

Applicant(s)/Inventor(s) name searched in AusPat, Espacenet and in internal databases provided by IP Australia.

C. DOCUMENTS CONSIDERED TO BE RELEVANT

| Category* | Citation of document, with indication, where appropriate, of the relevant passages | Relevant to claim No. |
|---|---|---|
| | Documents are listed in the continuation of Box C | |

[X] Further documents are listed in the continuation of Box C [X] See patent family annex

* Special categories of cited documents:

"A" document defining the general state of the art which is not considered to be of particular relevance

"D" document cited by the applicant in the international application

"E" earlier application or patent but published on or after the international filing date

"L" document which may throw doubts on priority claim(s) or which is cited to establish the publication date of another citation or other special reason (as specified)

"O" document referring to an oral disclosure, use, exhibition or other means

"P" document published prior to the international filing date but later than the priority date claimed

"T" later document published after the international filing date or priority date and not in conflict with the application but cited to understand the principle or theory underlying the invention

"X" document of particular relevance; the claimed invention cannot be considered novel or cannot be considered to involve an inventive step when the document is taken alone

"Y" document of particular relevance; the claimed invention cannot be considered to involve an inventive step when the document is combined with one or more other such documents, such combination being obvious to a person skilled in the art

"&" document member of the same patent family

| Date of the actual completion of the international search | Date of mailing of the international search report |
|---|---|
| 4 May 2020 | 04 May 2020 |
| **Name and mailing address of the ISA/AU** | **Authorised officer** |
| AUSTRALIAN PATENT OFFICE<br>PO BOX 200, WODEN ACT 2606, AUSTRALIA<br>Email address: pct@ipaustralia.gov.au | Ronaldo Sanchez<br>AUSTRALIAN PATENT OFFICE<br>(ISO 9001 Quality Certified Service)<br>Telephone No. +61262832653 |

| INTERNATIONAL SEARCH REPORT<br>C (Continuation). DOCUMENTS CONSIDERED TO BE RELEVANT | | International application No.<br>**PCT/AU2020/050144** |
|---|---|---|
| Category* | Citation of document, with indication, where appropriate, of the relevant passages | Relevant to claim No. |
| | WO 2018/048440 A1 (VISA INTERNATIONAL ASSOCIATION) 15 March 2018 | |
| X | See the whole document in particular the abstract; title; figs 1A-4; and paras 0003, 0024-0027, 0030-0032, 0035-0036. | 1-20, 23-26 |
| A | See the whole document. | 21-22 |
| | US 2013/0161390 A1 (RODRIQUEZ) 27 June 2013 | |
| X | See the whole document in particular the abstract; figs 1b, 2a-2f; and paras 0002, 0007, 0008, 0010, 0011, 0039-0045. | 1-20, 23-26 |
| A | See the whole document. | 21-22 |
| | WO 1998/014916 A2 (COVELEY, MICHAEL) 09 April 1998 | |
| X | See the whole document in particular the abstract; figs 1-3; and pg 1 ln 28 to pg 3 ln 8. | 1-6, 9-13 |
| | WO 1999/028863 A1 (DEUTSCHE TELEKOM AG et al.) 10 June 1999 | |
| X | See the whole document in particular the abstract; figs 1-5; and claims 1-5. | 1-6, 9-12 |

| INTERNATIONAL SEARCH REPORT<br>Information on patent family members | International application No.<br>**PCT/AU2020/050144** |
|---|---|

This Annex lists known patent family members relating to the patent documents cited in the above-mentioned international search report. The Australian Patent Office is in no way liable for these particulars which are merely given for the purpose of information.

| Patent Document/s Cited in Search Report | | Patent Family Member/s | |
|---|---|---|---|
| **Publication Number** | **Publication Date** | **Publication Number** | **Publication Date** |
| WO 2018/048440 A1 | 15 March 2018 | WO 2018048440 A1 | 15 Mar 2018 |
| | | CN 110168593 A | 23 Aug 2019 |
| | | EP 3510540 A1 | 17 Jul 2019 |
| | | SG 11201811259Y A | 30 Jan 2019 |
| US 2013/0161390 A1 | 27 June 2013 | US 2013161390 A1 | 27 Jun 2013 |
| | | US 8827158 B2 | 09 Sep 2014 |
| | | DE 102012224094 A1 | 27 Jun 2013 |
| | | US 2014284383 A1 | 25 Sep 2014 |
| | | US 8925816 B2 | 06 Jan 2015 |
| WO 1998/014916 A2 | 09 April 1998 | WO 9814916 A2 | 09 Apr 1998 |
| | | AU 4447597 A | 24 Apr 1998 |
| | | ZA 9708777 B | 27 Mar 1998 |
| WO 1999/028863 A1 | 10 June 1999 | WO 9928863 A1 | 10 Jun 1999 |
| | | DE 19752288 A1 | 27 May 1999 |

**End of Annex**

Due to data integration issues this family listing may not include 10 digit Australian applications filed since May 2001.