United States Patent [19]

Lucas et al.

[11] **3,729,886**

[45] **May 1, 1973**

[54] **METHOD AND APPARATUS FOR BANDING ARTICLES**

[75] Inventors: **William H. Lucas**, Green Bay; **Kenneth G. Jones**, De Pere, both of Wis.

[73] Assignee: **LeRoy E. Olsen; Sylvester A. Patrickus**, both of Green Bay, Wis.; part interest to each

[22] Filed: **May 17, 1971**

[21] Appl. No.: **143,783**

[52] **U.S. Cl.** .....**53/24,** 53/74, 53/124 D, 53/124 CC, 53/198 R, 53/209

[51] **Int. Cl.** **B65b 63/02,** B65b 13/20

[58] **Field of Search** .....53/24, 74, 124 R, 53/124 C, 124 D, 124 CC, 198, 209, 230

[56] **References Cited**

UNITED STATES PATENTS

3,261,141	7/1966	Hyer et al.	53/124 C
3,327,449	6/1967	Hullhorst et al.	53/124 D X
3,006,119	10/1961	Fingerhut	53/124 C X
3,262,241	7/1966	Hyer	53/74 X

Primary Examiner—Travis S. McGehee
Attorney—Wheeler, House & Wheeler

[57] **ABSTRACT**

A method and apparatus for applying restraining bands to layered articles such as a stacks of paper towels in which the apparatus includes upper and lower conveyors with converging runs to compress the stacks prior to application through a band delivery gap between two upper conveyors of pre-cut sheets of banding material to the upper surface of the compressed stacks. The banding sheets are cut from a web by a cut-off knife. The knife and apparatus for feeding the web are controlled by micro switches located in the article feed path which energize driven timing cams which control web feed and the cut-off knife. In addition to applying bands to discrete stacks or articles, a succession of longitudinally spaced bands can be applied to elongated stacks or "logs" such as a bolt of paper toweling of a length corresponding to the web width of the paper supplied to a towel interfolding machine. The log can be subsequently cut between the bands. Novel means are provided to maintain stack compression as the band is wrapped thereabout during continued advance of the stack to a point of discharge.

32 Claims, 13 Drawing Figures

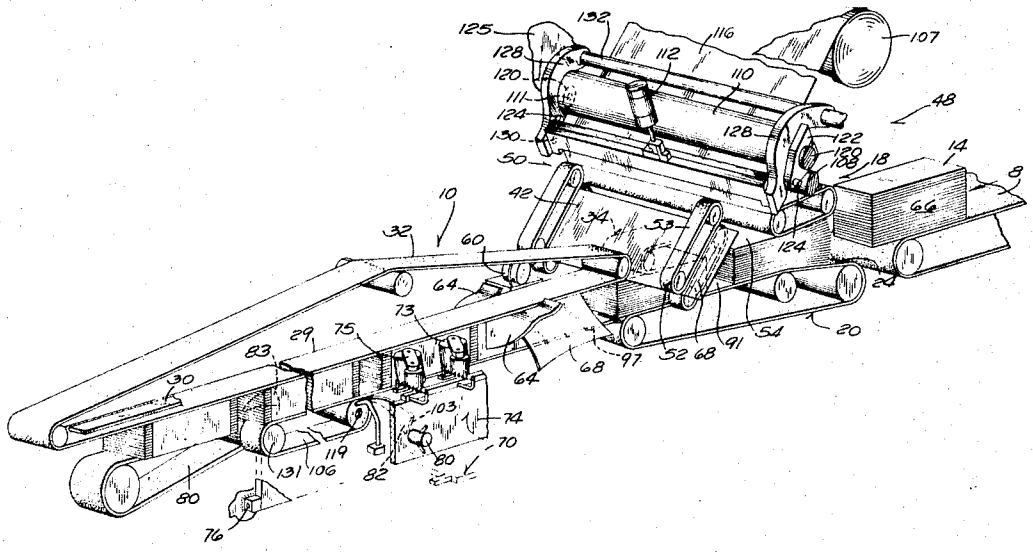

3 Sheets-Sheet 1

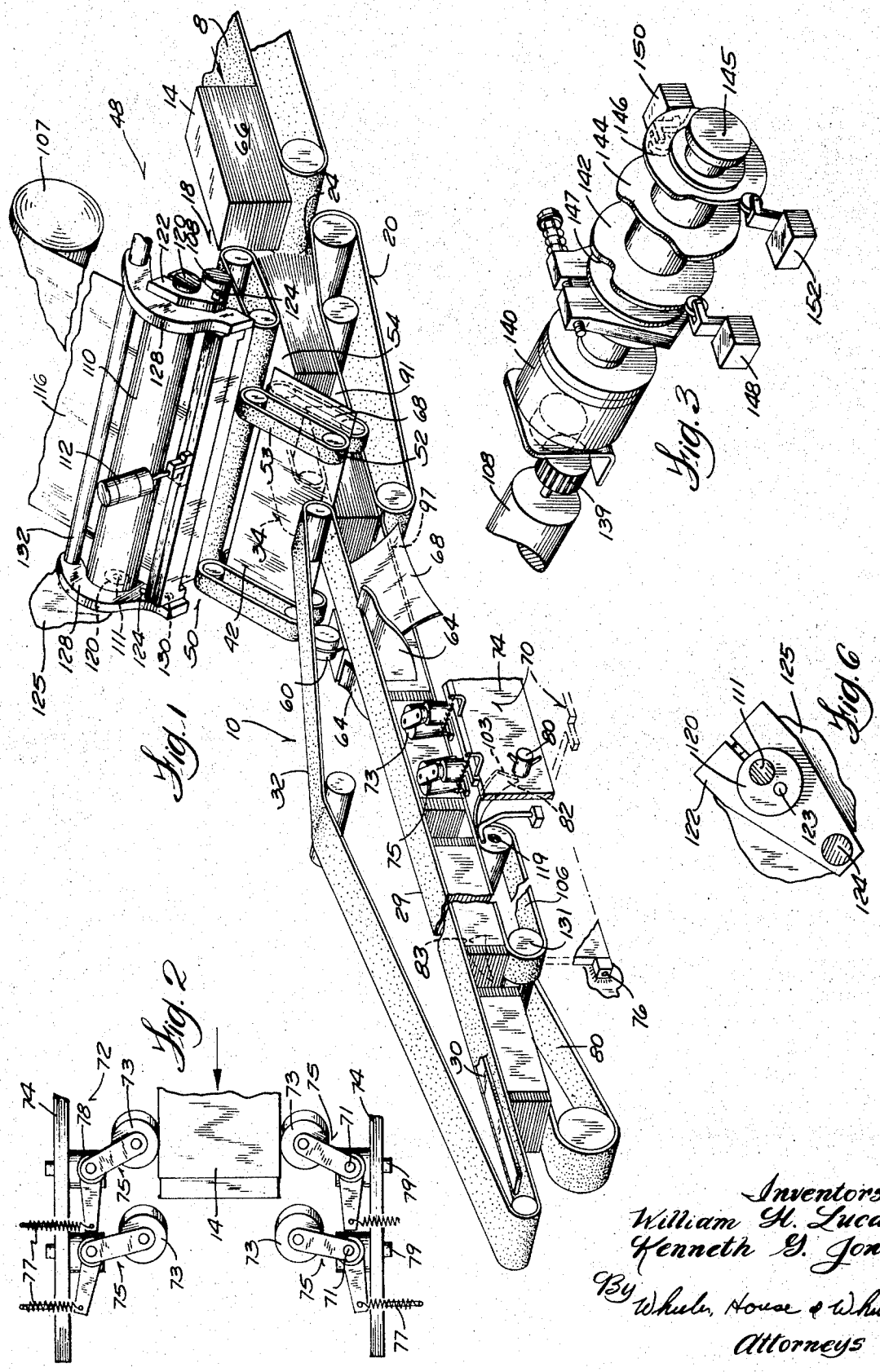

Inventors
William H. Lucas
Kenneth G. Jones
By Whule, House & Whule
Attorneys

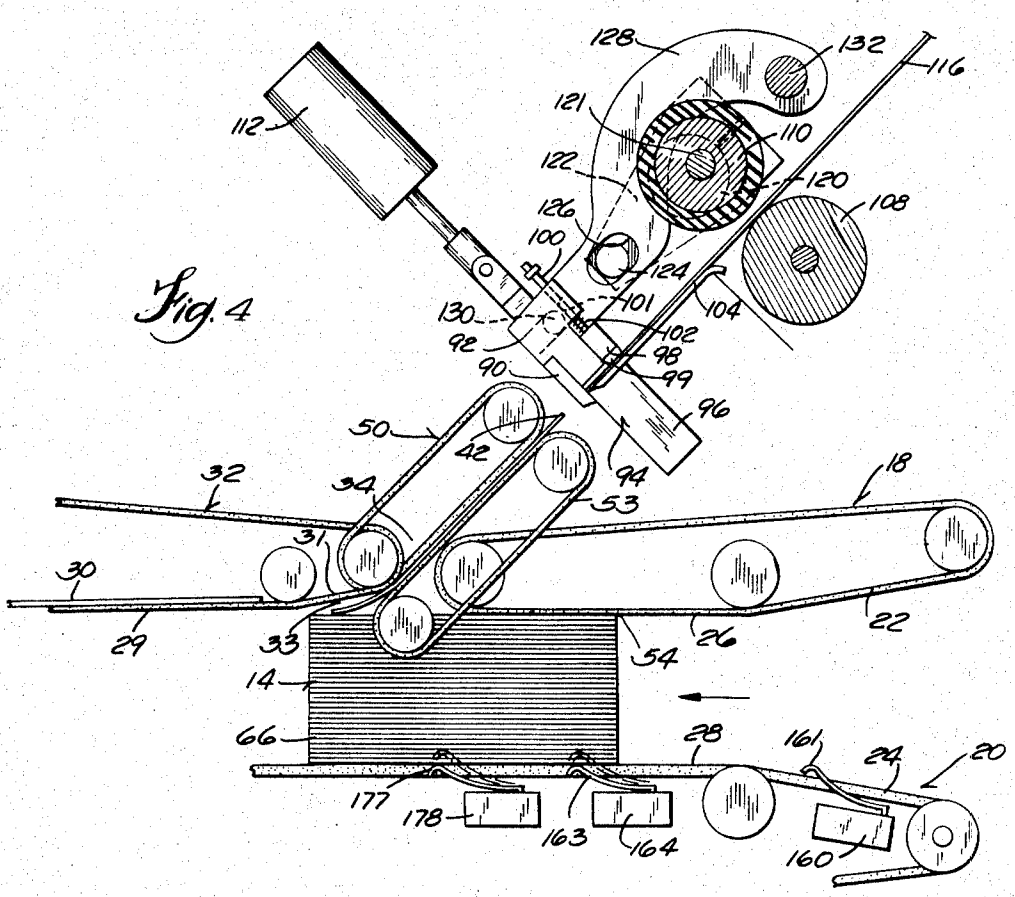

Fig. 4

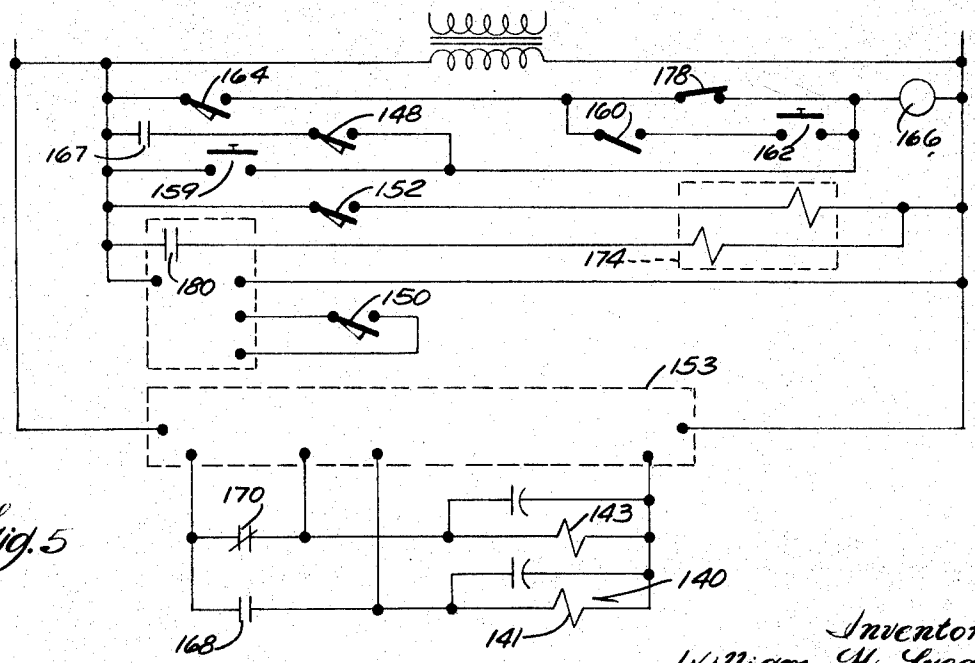

Fig. 5

Inventors
William H. Lucas
Kenneth G. Jones
By
Whulu, House & Whulu
Attorneys

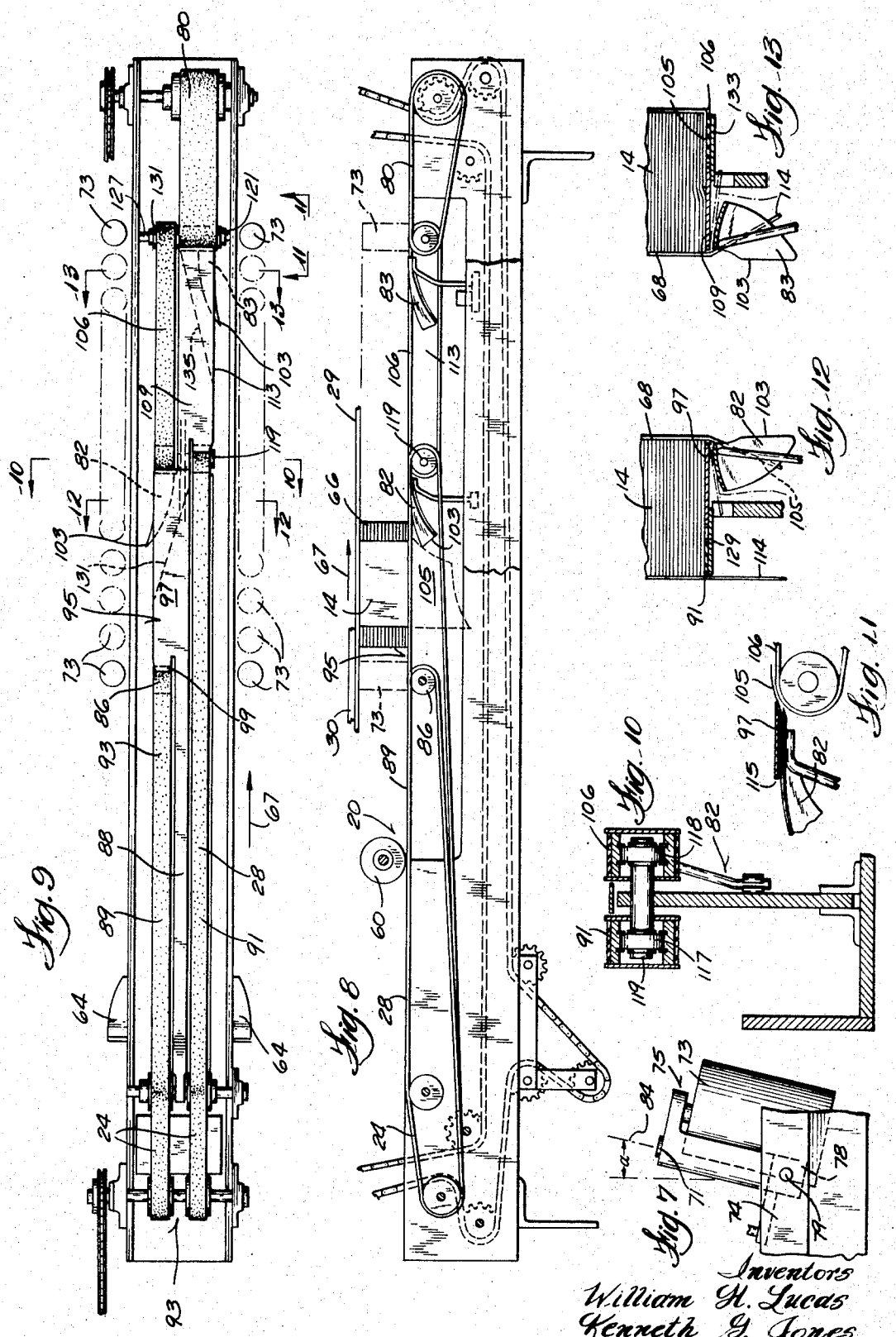

Inventors
William H. Lucas
Kenneth G. Jones
By Whiles, House & Whiles
Attorneys

METHOD AND APPARATUS FOR BANDING ARTICLES

BACKGROUND OF INVENTION

Restraining bands are applied to stacks or articles such as paper towels to maintain an imposed compression and thus reduce shipping volume and facilitate handling. Applying a band to the top of a stack of uncompressed articles as with prior art banding apparatus and subsequently compressing the stack and completing the wrapping sequence, often results in a wrinkled band, uneven edges and improper joinder of the band ends.

SUMMARY OF INVENTION

The method and apparatus of the invention applies a single, smooth, properly centered restraining band around discrete articles or stacks. It can also apply multiple bands around a log length article as the articles are moved continuously along a linear feed path as by upper and lower spaced conveyors.

Compression of the articles in advance of application of the restraining bands, to thus overcome the deficiencies of prior art apparatus, is desirably provided by converging runs on upper and lower article transport conveyors. The converging runs are located in advance of a band delivery gap between two longitudinally aligned upper conveyors through which the bands are delivered to the upper surface of the advancing articles. The upper conveyor downstream of the band delivery gap has an entrance flare run to provide clearance above the upper leading edge of the article for admittance of the band sheets. The lower run of the upper conveyor upstream of the delivery gap, maintains the imposed compression of the article as the band sheets are applied to the upper surface of the article. The articles remain compressed throughout the band wrapping sequence as the band is subsequently folded along the sides and beneath the advancing articles. Sheets of banding material are delivered to the articles through the band delivery gap by inclined pairs of band delivery belts with the belts in each pair having contiguous runs which grip the band sheets.

The band sheets are cut from a web of roll-stock banding material which is fed to the band delivery belts by web feed apparatus which is energized by a micro switch having a feeler in the article feed path which engages the advancing articles. Thus, the timing of the feed of banding material is controlled by the advancing articles and the articles do not have to move at uniform spacing through the banding apparatus. A cut-off knife controlled by timing cams and associated limit switches cuts a measured band sheet from the web. When multiple bands are applied to a log length article, a second micro switch with an article engaging feeler in the article feed path initiates the control cycle to cut-off multiple band sheets which are applied at uniform intervals.

The invention further incorporates novel means to maintain stack compression as the band is wrapped thereabout during continued advance of the stack to a point of discharge.

Although the banding method and apparatus of the invention is particularly appropriate for applying restraining bands to compressible stacks, it also can be used to band non-compressible articles.

It is an object of the invention to provide a method and apparatus which produces a tight, neat package, automatically cuts off bands in register with the package, and in which the banded ends are joined squarely around the package.

It is a further object of the invention to provide an automated banding method and apparatus with straight through product flow which is self-actuated and independent of line speed or power, and in which a full parent roll width of a folded product may be banded and fed to a log saw.

It is an additional object of the invention to provide a banding method and apparatus with a high production rate, and thus a lower cost per article, and in which the band width may be varied as desired.

Further objects, features, and advantages of the invention will become apparent from the following disclosure.

DRAWINGS

FIG. 1 is a fragmentary diagrammatic perspective view of banding apparatus in accordance with the invention.

FIG. 2 is a fragmentary diagrammatic plan view showing the relation between the compression rollers illustrated in FIG. 1 and a partially banded sheet stack.

FIG. 3 is a diagrammatic perspective view of the clutch-brake unit and timing cams which control the feed of the band web and the cut-off knife.

FIG. 4 is an enlarged fragmentary diagrammatic side elevational view showing parts of the apparatus shown in FIG. 1.

FIG. 5 is a schematic diagram of the electrical circuit which controls the feed of banding web and the web cut-off knife.

FIG. 6 is a fragmentary end view of the idler roller mounting arrangement shown in FIGS. 1 and 4.

FIG. 7 is an enlarged fragmentary side view of a compression roller and roller mount as also shown in FIGS. 1 and 2.

FIG. 8 is a side elevational view of the lower conveyor assembly along the side of the apparatus opposite the side shown in FIG. 1.

FIG. 9 is a plan view of the lower conveyor assembly shown in FIG. 8.

FIG. 10 is a sectional view along line 10—10 of FIG. 9.

FIG. 11 is an enlarged fragmentary view taken along line 11—11 of FIG. 9.

FIG. 12 is an enlarged fragmentary sectional view taken along line 12—12 of FIG. 9.

FIG. 13 is an enlarged fragmentary sectional view taken along line 13—13 of FIG. 9.

DETAILED DESCRIPTION OF PREFERRED EMBODIMENT

Although the disclosure hereof is detailed and exact to enable those skilled in the art to practice the invention, the physical embodiments herein disclosed merely exemplify the invention which may be embodied in other specific structure. The scope of the invention is defined in the claims appended hereto.

Like parts are identified in the several views by like reference characters.

An infeed belt conveyor **8** delivers articles **14** such as stacks of paper towels to the banding apparatus **10**. The paper sheets in the stack trap air and the stack is compressible in the vertical plane. The infeed conveyor **8** transfers the articles **14** to spaced upper and lower conveyor assemblies **18, 20** (FIG. 1, 4) which have opposed converging runs **22** and **24** (FIG. 4) which form an entrance throat and which progressively compress the advancing articles **14** to the desired height.

The compressed articles **14** move between parallel belt runs **26** and **28** of the belt conveyor assemblies **18, 20**. The discharge end of belt conveyor **18** is spaced from the input end of following belt conveyor **32**, thus to provide a band delivery gap **34** (FIG. 4) between the successive conveyors **18, 32**. Conveyor **32** has a lower belt run **29** parallel with upper belt run **28** of the lower conveyor assembly **20**. Run **29** has back-up means such as strip plate **30** or the like to maintain vertical compression on the stacks **14** as they travel therebeneath. Run **29** has an inclined lead-in run **31** which provides a clearance zone **33** between the run **31** and the top of the article **14**, thus to facilitate application of the restraining band sheets **42** to the tops of article **14**. Sheets **42** of band material are cut and fed to laterally spaced pairs **50, 52** (FIG. 1) of inclined band carrier belts **53** by means of web feed and cut-off apparatus **48** hereinafter described in detail. The pairs **50** and **52** of carrier belts are spaced laterally from each other a distance greater than the width of the article **14** and have contiguous runs which grip the margins of the band sheets **42** at zones laterally outwardly of the upper and lower conveyor assemblies **18, 20**. Accordingly, the pairs **50, 52** of belts **53** do not interfere with article movement between the conveyors **18, 20, 32**.

The band sheets **42** are delivered to the pairs **50, 52** of band belts in synchronization with the position of the article **14** as will presently be described, so that the band sheets **42** are applied to the upper surface **54** of the articles as the articles **14** move beneath the delivery gap **34** at a centered position between the fore and aft ends of the article and a medial position between the side margins, with wing portions **68** on the band sheets extending laterally of both sides of the article. As the band **42** is applied to the article, a glue applying roller **60** (FIG. 1) applies a stripe of glue or adhesive to the undersurface of the band sheet **42** along one margin.

As the continuously moving article **14** progresses between the belt conveyors **20** and **32**, the laterally projecting wings **68** of the band sheet **42** engage fixed, downwardly inclined plows **64** (FIGS. 1, 9) which are located on opposite sides of the article feed path and which fold the band wings **68** downwardly along the sides **66** of the articles **14** to form band side panels.

The winds or side panels **68** are firmly pressed against the side of the article by paired batteries **70** and **72** of compression idler rollers **73** located on opposite sides of the linear article feed path. In a practical embodiment of the invention, there are eleven rollers **73** in each battery with the idler rollers **73** individually rotatably supported on bell crank brackets **75** (FIGS. 2, 7) which are mounted on pivot pins **71**. The pivot pins **71** are carried by mounting blocks **78** which are pivotally connected to a swing plate **74** by horizontal pins **79**. Thus the axes of the rollers **73** can be tipped in a vertical plane parallel to the vertical sides of the article. In use, the axis of pins **71** is desirably inclined in the direction of product flow as represented by arrow **79** at an angle A of approximately 7° from the vertical. Thus, in addition to compressing the band side panels **68** against the sides of the article, the inclined rollers **73** urge the wrap downward as the rollers **73** rotate about their inclined axes, induce vertical tension in the side panels **68** to remove wrinkles and snug the band around the stack **14**.

The swing plates **74** are hinged on pins **76** to permit each battery **70, 72** to be swung laterally out of the article feed path for cleaning purposes, as suggested in broken lines in FIG. 1. The plate **74** is held in its normal, upright full line position by clamp nut **80**. Springs **77** connected between the ends of the bell cranks and the swing plate **74** bias the rollers **73** against the stack and yield as the rollers **73** swing about the pins **71** when the rollers **73** engage the sides of the article.

As the stacks **14** move between the compression rollers **73**, in the direction of arrow **67** (FIG. 8) the wing flaps **105, 114** extending from side band wing panels **68** (FIGS. 8, 12 and 13) are tucked beneath the article **14** by two longitudinally staggered bottom plows **82, 83** associated with the lower conveyor assembly **20** to form bottom panels. The arrangement is such that vertical stack compression is maintained throughout this process.

The lower conveyor assembly **20** has an inclined run **24** and a horizontal run **28** as previously described (FIGS. 4 and 8). The runs **24** and **28** are formed by two belts **89** and **91** which are laterally separated by a gap **93** (FIG. 9). The belt **89** is shorter than the belt **91** to provide a gap **95** between its discharge end at belt roller **86** and the input end of belt **106** at belt roller **119**, thus to leave the zone **95** just ahead of plow **82** free of belts at the side of the assembly which is adjacent wing flap **105**.

Article **14** is supported as it passes over the gap **95** at its side adjacent wing flaps **114** by the belt **91** and at its center and its side adjacent wing flap **105** by a table plate **97** which spans the gap **95** and includes a finger plate portion **88** which fills in the gap or space **93** between the belts **89, 91**. The plate **97** is provided with a downturned lip **99** at the leading edge of gap **93** to afford smooth transfer of the article **14** onto the plate **97**.

The leading edge **103** (FIGS. 1, 9 and 12) of the plow **82** is laterally outwardly offset from the edge of the plate **97** and from the side of article **14** and band panel **68** to intercept and capture the wing flap **105** as the article **14** comes abreast of plow **82** (FIGS. 8, 12).

The action of the plow **82** is illustrated in FIG. 12. The unglued margin or wing flap **105** of band side panel **68** is progressively folded in the gap **95** upwardly and inwardly from the generally vertical position shown in broken lines to the generally horizontal position in broken lines beneath the plate **97**. During this progression, stack compression is maintained between top belt **29** and plate **97**. Continued progress of the stack **14** causes the wing flap **105** to move into the narrow gap or throat **115** between the top of the plow **82** (FIG. 11) and the plate **97** and climb onto the leading end of following belt **106** and up against the bottom of stack **14**. Belt **106** is located adjacent to an article support plate **109** which spans another gap **113** which is staggered with respect to gap **95** and which extends from the

discharge end of belt **91** and the input end of final compression belt **80**.

Belt **80** has an input end reeved on a roller **121** on shaft **127** which also carries a belt roller **131** for the discharge end of belt **106**. The adjacent ends of belts **91** and **106** are respectively reeved on rollers **117** and **118** which are carried by a common shaft **119** (FIG. **10**).

The undersurface of belt **91** is supported in the area of gap **95** by a plate **129** (FIG. **12**) which is connected to plate **97** and has a tapered trailing edge **131** which leads into plow **82** (FIG. **9**). Similarly, a plate **133** (FIG. **13**) with a tapered edge **135** (FIG. **9**) supports the belt **106** in the area of the gap **113**.

The glued margin or wing flap **114** (FIG. **13**) is folded upwardly and beneath plate **109** by plow **83** in gap **113** in the same manner as previously described for flap **105**. (See FIG. **13**). The leading edge **103** of plow **83** intercepts the flap **114** and folds it up against the undersurface of plate **109** and ultimately over belt **80** and against the undersurface of the article **14**. The extreme glued margin of flap **114** comes into overlapping relationship with the unglued wing flap **105**, thus gluing the flaps together. As the article **14** moves beyond the plate **109**, the belt **80** presses the glued wing **114** against the wing **105** to complete the band by firmly uniting the overwrapped wings **105** and **114**.

Thus, the lower conveyor assembly **20** provides continuous and firm support for and maintains stack compression on article **14** throughout the length of the apparatus **10** and across the gaps **95**, **113**, thus permitting folding of the bottom flaps or wings **105**, **114** without interference with the runs of any belts.

The web feed and cut-off apparatus **48** (FIGS. **1**, **4** and **6**) includes a movable knife **90** carried by a reciprocable knife bar **92** mounted in guides (not shown) and a bed knife or fixed knife **94** carried by bar **96**. When the knife **90** moves against the bed knife **94**, a hold down bar **98** with rubber buttons or feet clamps the web **116** of banding material against a web support plate **104**. The hold-down bar **98** is yieldably mounted on guide rods or studs **100** which are received in apertures **101** in bar **92**. Springs **102** arranged around the studs **100** yield as the holding bar **98** engages the web **116** against the web support plate **104**. Knife bar **92** is actuated by fluid motor **112** for movement of the knife **90** between a cutting position and a retracted position as hereinafter explained.

Feed of the web **116** from a supply roll **107** (FIG. **1**) to the cut-off knife **90** is provided by a driven friction roller **108** which rotates about a fixed axis, and an intermittently coacting idler roller **110** which is rotatably supported on a shaft **111** which is rotatably and eccentrically supported by a pair of spaced bearing discs **120** (FIG. **4**, **6**) which support the ends of the shaft **111**. The bearing discs **120** are pivotally supported on the frame **125** by pintles **123** (FIG. **6**). The eccentric bearing discs **120** are adjustably mounted in clamp arms **22** (FIG. **6**) which have cam followers **124** received in cam slots **126** in two interconnected curved follower levers **128** located at the ends of the idler roller **110**.

The follower levers **128** are respectively connected by ball joints **130** (FIGS. **1** and **4**) to the ends of the knife bar **92**. The other ends of the follower levers **128** are fixedly connected to a cross shaft **132** pivotally supported on frame **125**. The levers **128** are adapted to swing about shaft **132**. Thus, upward movement of the knife bar **92** causes upward movement of the ball joints **130** and swings the levers **128** clockwise about the pivotal axis of shaft **132**. This transmits corresponding clockwise movement to the clamp arms **122** about fixed pivot **123**, thus swinging idler roller **110** downwardly against the web **116** and thence against the friction roller **108**, whereby to feed the web forwardly to the pairs **50**, **52** of band carrier belts **53**.

Means are provided operable in response to engagement by the advancing articles to control movement of the idler roller **110** against the web **116** and the feed roller **108**, thus to feed the web to the cut-off knife **90**, and actuate the knife **90** to cut a measured length or band **42** from the web **116**. In the disclosed construction, the means includes a clutch, brake unit **140** connected by gears **139** to friction roller **108** and provided with a clutch winding **141** and a brake winding **143** (FIG. **5**) which operates from a dc power supply **153**. The clutch-brake unit **140** has an output shaft **145** carrying three cams **142**, **144**, and **146**. The cams **142**, **144** and **146** respectively engage cam followers on activating levers of switches **148**, **150**, and **152**. The shaft **145** and cams rotate one revolution as an article **14** moves one article length between the conveyors **18**, **20**. The fixed relationship between cam rotation and article movement permits equal spacing of consecutive bands on logs as presently described.

In operation, when an article **14** moves between conveyors **18** and **20**, it initially engages the feeler **161** of a normally open micro switch **160** (FIGS. **4**, **5**). The feeler **161** is located in the article feed path. The micro switch **160** and a manual switch **162** are employed to apply multiple spaced bands to a bolt or log as hereinafter described.

When only separate and discrete articles are being supplied to the apparatus, the single cycle switch **159** is closed, and switch **162** is placed in an open position. Thus the micro switch **160** is ineffective and does not energize the clutch-brake unit **140** when its feeler **161** is contacted by an article. The advancing article **14** next engages a feeler **163** on a micro switch **164** which is normally open. When switch **164** is closed by engagement of an article **14** with feeler **163**, it completes the circuit though normally closed micro switch **178** to energize a relay **166** (FIG. **5**) and close normally open relay contacts **167** and **168** and open normally closed relay contacts **170**. The closing of contacts **168** energizes the clutch winding **141** and the opening of the relay contacts **170** de-energizes the brake winding **143**, thus to initiate rotation of shaft **145** and the cams **142**, **144**, and **146**.

As the cam **142** rotates, the cam follower of the switch **148** comes out of the notch or recess **147** and closes the normally open switch **148**. The now closed contacts **167** and closed switch **148** maintain current flow to the relay coil **166** as long as the cam follower is out of the recess **147** of cam **142**. As the cams continue to rotate, the cam **146** closes normally open switch **152** which completes the circuit to a solenoid valve **174** which pressurizes the pneumatic cylinder **112** to raise the cut-off knife **90**. As the knife **90** raises under influence of the cylinder **112**, the levers **128** move the idler roller **110** against the drive roller **108** to commence feed of the web **116** of banding material to the pairs **50**, **52** of the band carrier belts.

As the article **14** continues to advance between the conveyors **18, 20, 32**, it engages the feeler **177** of normally closed micro switch **178**, thereby opening the circuit path to the relay **166** and leaving the circuit maintained only through the microswitch **148** to the relay coil **166**.

The web **116** continues to feed until an electric eye scanner (not shown) senses a printed spot on the band web **116**, and closes relay contacts **180** which energize the solenoid **174** and fluid motor **112** to advance the knife **90** to cut off a band sheet **42** from the web **116**. As the knife **90** is lowered, the idler roller **110** moves away from the drive roller to stop feed of the web **116**. The buttons **99** concurrently clamp the web **116** against the plate **104** to positively stop web feed.

The switch **150** is actuated by the cam **144** which resets the electric eye relay for the next article. As the cam shaft **145** completes one revolution and the cam follower on switch **148** moves into the recess on cam **142**, switch **148** opens to interrupt the other circuit to relay **166** and hence open contacts **168** to interrupt current flow to the clutch winding **141** and closes contacts **170** to energize the brake winding **143** to stop movement of the cams. The article **14** now advances to intercept the band sheet **42** and the circuit is ready for another article.

The micro switches **160, 164** and **178** are slideably mounted for longitudinal movement to afford adjustment of band position on the articles. Accordingly, the circuit synchronizes the actuation of the band cut-off and feed apparatus in time with article feed to insure application of the band to the article.

When banding a log length article with multiple bands, the manual switch **162** is closed and the single cycle switch **159** for applying a single band is left in the open position. The relay **166** will thus remain energized because the elongated log will span between and close both switches **160** and **164**, thus maintaining a completed circuit through closed manual switch **162** to relay **166**. With the circuit thus maintained to the relay **166**, the timing motor shaft **145** keeps cycling the cams until the trailing end of the log passes beyond the feeler **161** of switch **160**. Switch **160** then opens. Once the log moves past the feeler **161**, the sequence of operations appropriate for applying single bands on spaced discrete articles, as previously described, continues until the last band is applied to the log.

What is claimed is:

1. In apparatus for banding compressible articles, the improvement comprising means for advancing the articles in spaced longitudinal progression, means progressively compressing the articles as they advance, means for delivering band sheets in time with the advancing articles, means for applying said band sheets to one face of the compressed articles as the articles advance and in time therewith and with the leading edge of the band sheet initially engaging the articles at a predetermined location therealong and following portions of the band sheet subsequently and progressively contacting the articles as they advance, means for folding extending wing portions of the band sheets along the sides of the compressed article, and means for folding the ends of the band sheets inwardly about the compressed article to complete the band.

2. The improvement of claim **1** in which said band sheet is wider than the article and said means for applying the band sheet comprises means for contacting a medial portion of the sheet with the article surface, leaving wing portions extending laterally of both sides of the article.

3. The improvement of claim **1** wherein said means for compressing the articles comprises upper and lower conveyors having spaced converging runs and succeeding parallel runs for maintaining the imposed compression.

4. The improvement of claim **3** wherein two upper conveyors are longitudinally aligned above a linear article feed path and separated by a band delivery gap downstream of said converging runs.

5. In apparatus for banding compressible articles, the improvement comprising upper and lower conveyors for advancing the articles including spaced converging runs for compressing the articles and succeeding parallel runs for maintaining the imposed compression including two longitudinally aligned upper conveyors above the article feed path and separated by a band delivery gap downstream of said converging runs, pairs of band sheet delivery belts with each of said pairs having contiguous runs which grip band sheets and deliver said sheets through said band delivery gap to one face of the compressed articles, means for holding extending wing portions of the band sheets along the sides of the compressed article, and means for folding the ends of the band sheets inwardly about the compressed article to complete the band.

6. The improvement of claim **1** including sheet supply means triggered by advancing articles to feed a web of banding material and cut a measured sheet from the web in synchronism with article movement so that the band sheet is delivered to the article in time therewith.

7. The improvement of claim **6** wherein said sheet supply means comprises a cut-off knife, a drive roller, an idler roller, intermittant feed means for moving said idler roller against the web to press the web against said drive roller to feed the web to said cut-off knife, and actuating means for moving said cut-off knife against the web to sever a band sheet.

8. The improvement of claim **7** wherein said intermittant feed means and actuating means comprises a motor connected to said knife and said idler roller, a clutch-brake unit having an output shaft with timing cams and switches operatively associated with said cams, a first switch in the article feed path engageable with advancing articles, a circuit connected to said cam switches and said feed path switch to energize said timing motor and rotate the cams to energize said knife and roller motor to feed the web, cut off a band sheet from the web, and interrupt web feed.

9. The improvement of claim **8** including means for mounting said switch to afford adjustment of the linear position of said switch in the feed path to vary the position of the band on the article.

10. The improvement of claim **8** including a second switch in said linear feed path to open a circuit path to said timing motor so that said timing motor is de-energized upon completion of one revolution of said cams.

11. The improvement of claim **8** including a third switch located in advance of said first switch and having a feeler engageable with the advancing articles to maintain current flow to said timing motor while said

feeler is in contact with an article to continue rotation of said cams and feed multiple band sheets to the article.

12. The improvement of claim 1 wherein said articles are advanced in spaced succession to said means for applying band sheets and including means associated with the article feed path to sense the position of the advancing articles to actuate the sheet applying means for successively applying individual band sheets to each of the advancing articles.

13. In apparatus for banding compressible articles, the improvement comprising means for compressing the advancing articles, means for applying band sheets to one face of the compressed articles, means for folding extending wing portions of the band sheets along the sides of the compressed article, and means for folding the ends of the band sheets inwardly about the compressed article to complete the band, and wherein said articles comprise layered logs and including means associated with the article feed path to sense the presence of the logs to actuate the sheet applying means and apply multiple spaced bands to the logs.

14. In apparatus for banding compressible articles, the improvement comprising means for compressing the advancing articles, means for applying band sheets to one face of the compressed articles, means for folding extending wing portions of the band sheets along the sides of the compressed article, and means for folding the ends of the band sheets inwardly about the compressed article to complete the band, and wherein said means for folding extending wing portions of the band sheets along the sides of the article comprises spaced plows and batteries of rollers downstream of the plows and located on opposite sides of the article feed path.

15. The improvement of claim 14 including roller support brackets and means for tilting said brackets to afford adjustment of the position of the axes of said rollers in a vertical plane parallel to the sides of the articles.

16. The improvement of claim 14 wherein said rollers are inclined to induce vertical tension in the side panels of the band as articles advance between the compression rollers.

17. In apparatus for banding compressible articles, the improvement comprising means for compressing the advancing articles, means for applying band sheets to one face of the compressed articles, means for folding extending wing portions of the band sheets along the sides of the compressed article, and means for folding the ends of the band sheets inwardly about the compressed article to complete the band, and including a lower conveyor assembly having belts for advancing the articles being wrapped and wherein said means for folding the ends of the band sheets inwardly about the article to complete the band comprises first and second longitudinally staggered plows associated with said lower conveyor assembly.

18. The improvement of claim 17 wherein said lower conveyor assembly includes adjacent first and second conveyor belts with said first belt terminating at a point upstream from one said plow to provide a first folding gap free of belts and said second belt extending adjacent said first plow to advance the article past said first plow, a second folding gap downstream of said second belt and between said second belt and said second plow for folding the other band side panel beneath the article, a third belt longitudinally aligned with said first belt and said first gap and extending adjacent to said second plow, to move the article past the second plow.

19. The improvement of claim 18 including plates bridging said gaps to support the advancing articles.

20. The improvement of claim 19 wherein said plates are co-planar with said conveyor runs and spaced upwardly above the upper surface of the plows to provide clearance for movement of the folded wings beneath the plates and above the plows.

21. The improvement of claim 1 including means for applying glue to the margin of one of the wing portions of the band sheet prior to folding the wing portions along the sides of the article.

22. Apparatus for banding articles comprising first and second upper conveyors longitudinally aligned along a linear feed path and separated by a band delivery gap, a lower conveyor spaced below said upper conveyors, said upper and lower conveyors having converging runs for compressing the articles in advance of said band delivery gap and parallel runs for maintaining the articles in a compressed state during the band wrapping sequence,

means for delivering sheets of banding material through the band delivery gap to the advancing articles,

and means triggered by the articles on said conveyors for supplying the sheets of banding material to said sheet delivery means for application to the articles as the articles arrive at said band delivery gap.

23. Apparatus in accordance with claim 22 wherein said means for delivering sheets of banding material through the band delivery gap comprises spaced pairs of band carrier belts having contiguous runs for gripping band sheets.

24. Apparatus for banding articles comprising conveyors defining a linear article feed path, said conveyors including converging runs for progressively compressing the article as it advances along the feed path, band applying means, means in said feed path for sensing article position and a circuit connecting said sensing means to actuate web feed and web cut-off mans to supply measured band sheets to said band applying means in time with movement of the articles with the leading edge of the band sheet initially engaging the articles at a predetermined location on the article and following portions of the band sheet subsequently and progressively contacting the articles as they advance.

25. Web feed and cut-off apparatus comprising a bed knife,

a movable knife,

a reciprocable knife bar carrying said movable knife,

a motor connected to said knife bar for moving said knife bar between a retracted position and a cutting position,

a drive roller,

an idler roller,

a frame,

bearing discs rotatably connected to a said frame, said bearing discs eccentrically and rotatably supporting said idler roller,

bearing clamps connected to said bearing discs and having cam followers,

a pair of follower levers,

a cross shaft fixed to one end of said follower levers and pivotally supported on said frame,

cam slots in said follower levers receiving said cam followers on said bearing clamps, and

ball joints connecting said follower levers to said knife bar to afford movement of said idler roller toward said drive roller to clamp the web against the drive roller when said knife bar is in a retracted position and to move said idler roller away from the web when said knife bar is moved into a cutting position.

26. A method for banding compressible articles and comprising the steps of:

advancing the articles to be compressed in a spaced longitudinal progression,

progressively compressing the individual articles as the articles are advanced,

applying a band sheet to the compressed article in time with the advancing article with the leading edge of the band sheet initially engaging the article at a predetermined location along the article and following portions of the band sheet subsequently and progressively contacting the articles as the article advances with a portion of the band sheet contacting the article and leaving a band sheet wing portion extending laterally on at least one side of the article,

folding the wing portion of the band sheet along the side of the compressed article as the articles advance, and

folding the end of the band sheet inwardly about the compressed article and upwardly against its bottom to complete the band.

27. The method of claim **26** including the steps of applying a second band sheet to the compressed article, folding the second band sheet along the side of the compressed article, and folding the end of the band sheet inwardly about the compressed article to complete the band.

28. The method of claim **26** in which a medial portion of the band sheet is applied to the article, leaving band sheet wings extending laterally at both sides of the article and folding both wings along the article sides and up against its bottom and into overlapped relation.

29. The method of claim **28** including the step of maintaining compression on the article throughout the folding steps.

30. A method for banding compressible articles and comprising the steps of:

compressing the article,

applying a band sheet to the compressed article with a portion of the band sheet contacting the article and leaving a band sheet wing portion extending laterally on at least one side of the article,

folding the wing portion of the band sheet along the side of the compressed article,

folding the end of the band sheet inwardly about the compressed article and upwardly against its bottom to complete the band,

maintaining compression on the article throughout the folding steps by transferring support of the articles between traveling belts and slide plates in the course of folding said wings up against the article bottom.

31. The method of claim **30** in which the wings are threaded through gaps between the plates and belts to bring them into contact with the article bottom.

32. In apparatus for banding compressible articles, the subcombination of a lower conveyor assembly for overwrapping a glued side band panel flap upon an unglued side band panel flap comprising,

first and second belts having co-planar upper runs, said first belt having a run shorter than said second belt, a first plow located downstream of said first belt and spaced from the end of said first belt to provide a first belt free gap for folding a band side panel flap beneath the article and said second belt extending along side fist plow to advance the article past the first plow, a second plow for folding the other band side panel flap beneath the article, said second plow being spaced from the downstream end of said second belt to provide a second belt free folding gap for the other band side panel flap, a third belt having a run co-planar with said upper runs of said first and second belts and extending adjacent said second plow for advancing the articles past said second plow and plates co-planar with said upper runs of said first, second and third plates and bridging said gaps to support the articles as they move past said gaps, and throats beneath said plates and above said plows to afford movement of the folded panels between said plows and said plates and a fourth conveyor belt downstream of said third conveyor belt for compressing the glued panel against the unglued panel to complete the band.

* * * * *