(12) UK Patent Application (19) GB (11) 2 401 592 (13) A

(43) Date of Printing by UK Office 17.11.2004

(21) Application No: 0421226.2

(22) Date of Filing: 17.10.2002

(30) Priority Data:
(31) 0213120 (32) 07.06.2002 (33) GB
(31) 0217153 (32) 24.07.2002

(86) International Application Data:
PCT/GB2002/004685 En 17.10.2002

(87) International Publication Data:
WO2004/009433 En 29.01.2004

(71) Applicant(s):
Brumby Corporation Limited
(Incorporated in the United Kingdom)
Stanley House, DOUGLAS, IM1 2BF,
Isle of Man

(continued on next page)

(51) INT CL[7]:
B62M 7/02 , F01L 9/02 , F01M 11/00 11/02 , F01P 3/00 5/10 5/12 , F02D 41/00 , F02F 1/16 3/00 , F02M 35/10 69/00 , F16C 3/06 7/00 , F16F 15/20

(52) UK CL (Edition W):
B7H HC HDR HDV HNV HNW H512 H713
F1B BB102 BB120 BB135 BB208 BB210 BB212 BB228 BB234 BB246 BB400 B12G1B B12G21 B12G4C B2AA B2AB B2AD B2AE B2A15 B2A7 B2A9A B2A9C B2C1A B2C1C B2C7F4 B2P5 B4A B5R1E B5R1N B6G
F1M M18
F2A ALD
F2T T22BX T24 T37A3 T37A6A4 T37A6C
F4U UA U24A1

(56) Documents Cited by ISA:
JP 630145189 A **JP 110091674 A**

(58) Field of Search by ISA:
INT CL[7] **B62M**
Other: **EPO - Internal, PAJ**

(54) Abstract Title: **Motorcycle engine**

(57) A motorcycle engine (20) is disclosed for mounting in a motorcycle (10) such that cylinders (80) in the engine are all inclined towards the rear of the motorcycle. This configuration can allow the engine to be mounted further forwards in the motorcycle, giving rise to advantages in the design of the motorcycle, including allowing a more compact engine. Further aspects include features of a powertrain of such a motorcycle, including components of the engine, and further components of such a motorcycle or engine.

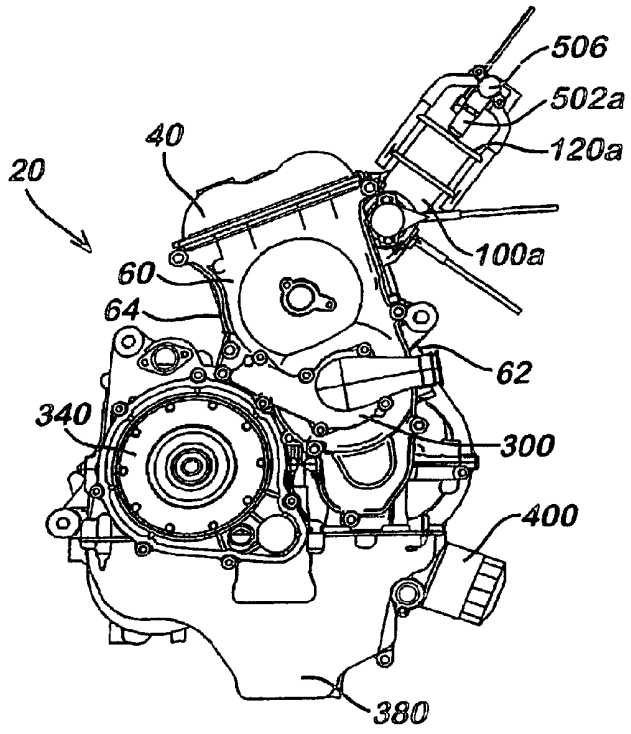

GB 2 401 592 A

This international application has entered the national phase early

GB 2401592 A continuation

(72) Inventor(s):
Dimitri Bassis
Marc Bongers
Jurgen Buck
Luigi Mascheroni
Yasuyuki Satoh
Eskil Suter
Hironao Takahashi
Hidezo Umiyama
Thomas Walter
Jost Capito
Paul Fricker
Alessandro Giussani
Osamu Goto
Luca Guerciotti
Stephen Harris
Lester Harris
Hidehito Ikebe
Urs Jann
Masaaki Yoshikawa

(74) Agent and/or Address for Service:
Mathys & Squire
100 Grays Inn Road, LONDON, WC1X 8AL,
United Kingdom