(12) STANDARD PATENT (11) Application No. **AU 2013301468 B2**
(19) AUSTRALIAN PATENT OFFICE

(54) Title
Solar thermosiphon system

(51) International Patent Classification(s)
F24S 60/00 (2018.01) ***F24S 10/90*** (2018.01)

(21) Application No: **2013301468** (22) Date of Filing: **2013.08.09**

(87) WIPO No: **WO14/023831**

(30) Priority Data

(31) Number	(32) Date	(33) Country
10 2012 015 984.6	**2012.08.10**	**DE**

(43) Publication Date: **2014.02.13**
(44) Accepted Journal Date: **2018.03.08**

(71) Applicant(s)
Robert Bosch GmbH

(72) Inventor(s)
Lunz, Karin;Kemp, Alexander;Gachignard, Nelly;Clement, Uwe

(74) Agent / Attorney
Fisher Adams Kelly Callinans, L 6 175 Eagle St, BRISBANE, QLD, 4000, AU

(56) Related Art
GB 2455578 A

(12) NACH DEM VERTRAG ÜBER DIE INTERNATIONALE ZUSAMMENARBEIT AUF DEM GEBIET DES PATENTWESENS (PCT) VERÖFFENTLICHTE INTERNATIONALE ANMELDUNG

(19) Weltorganisation für geistiges Eigentum
Internationales Büro

(43) Internationales Veröffentlichungsdatum
13. Februar 2014 (13.02.2014)

WIPO | PCT

(10) Internationale Veröffentlichungsnummer
WO 2014/023831 A1

(51) Internationale Patentklassifikation:
F24J 2/34 (2006.01) *F24J 2/44* (2006.01)

(21) Internationales Aktenzeichen: PCT/EP2013/066736

(22) Internationales Anmeldedatum:
9. August 2013 (09.08.2013)

(25) Einreichungssprache: Deutsch

(26) Veröffentlichungssprache: Deutsch

(30) Angaben zur Priorität:
10 2012 015 984.6
10. August 2012 (10.08.2012) DE

(71) Anmelder: **ROBERT BOSCH GMBH** [DE/DE]; Postfach 30 02 20, 70442 Stuttgart (DE).

(72) Erfinder: **LUNZ, Karin**; Hoelderlinstr. 3, 70839 Gerlingen (DE). **KEMP, Alexander**; Leerer Strasse 6, 28219 Bremen-Walle (DE). **GACHIGNARD, Nelly**; Dr.-Siegfried-Pflugfelder-Plat, 70806 Kornwestheim (DE). **CLEMENT, Uwe**; Gruenenbergstr. 2, 73114 Schlat (DE).

(74) Gemeinsamer Vertreter: **ROBERT BOSCH GMBH**; Postfach 30 02 20, 70442 Stuttgart (DE).

(81) Bestimmungsstaaten *(soweit nicht anders angegeben, für jede verfügbare nationale Schutzrechtsart)*: AE, AG, AL, AM, AO, AT, AU, AZ, BA, BB, BG, BH, BN, BR, BW, BY, BZ, CA, CH, CL, CN, CO, CR, CU, CZ, DK, DM, DO, DZ, EC, EE, EG, ES, FI, GB, GD, GE, GH, GM, GT, HN, HR, HU, ID, IL, IN, IS, JP, KE, KG, KN, KP, KR, KZ, LA, LC, LK, LR, LS, LT, LU, LY, MA, MD, ME, MG, MK, MN, MW, MX, MY, MZ, NA, NG, NI, NO, NZ, OM, PA, PE, PG, PH, PL, PT, QA, RO, RS, RU, RW, SA, SC, SD, SE, SG, SK, SL, SM, ST, SV, SY, TH, TJ, TM, TN, TR, TT, TZ, UA, UG, US, UZ, VC, VN, ZA, ZM, ZW.

(84) Bestimmungsstaaten *(soweit nicht anders angegeben, für jede verfügbare regionale Schutzrechtsart)*: ARIPO (BW, GH, GM, KE, LR, LS, MW, MZ, NA, RW, SD, SL, SZ, TZ, UG, ZM, ZW), eurasisches (AM, AZ, BY, KG, KZ, RU, TJ, TM), europäisches (AL, AT, BE, BG, CH, CY, CZ, DE, DK, EE, ES, FI, FR, GB, GR, HR, HU, IE, IS, IT, LT, LU, LV, MC, MK, MT, NL, NO, PL, PT, RO, RS, SE, SI, SK, SM, TR), OAPI (BF, BJ, CF, CG, CI, CM, GA, GN, GQ, GW, KM, ML, MR, NE, SN, TD, TG).

Veröffentlicht:

— *mit internationalem Recherchenbericht (Artikel 21 Absatz 3)*

(54) **Title**: SOLAR THERMOSIPHON SYSTEM

(54) **Bezeichnung** : SOLARES THERMOSIPHONSYSTEM

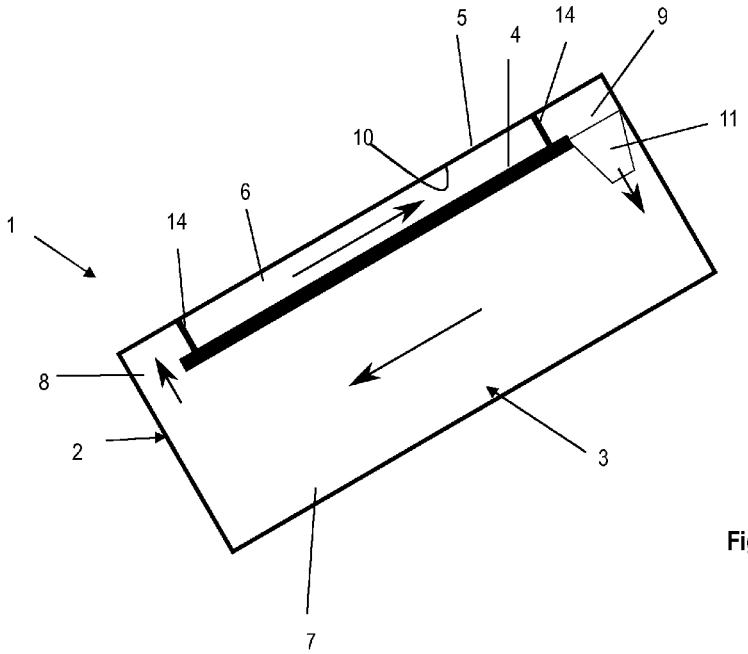

Fig. 1

(57) **Abstract**: The invention relates to a solar thermosiphon system (1) for heating water, comprising a housing (2), in which a tank volume (3) is formed. The object of the invention is to provide a low-cost and robust thermosiphon system with high efficiency. The thermosiphon system (1) according to the invention is characterized in that in the housing (2) there is arranged a separating element (4), which separates the tank volume (3) into an absorber volume (6) and a reservoir volume (7), wherein the absorber volume (6) is arranged geodetically above the reservoir volume (7) in the operationally ready state of the thermosiphon system (1).

(57) **Zusammenfassung**: Die Erfindung betrifft ein solares Thermosiphonsystem (1) zur Wassererwärmung mit einem Gehäuse (2), in dem ein Behältervolumen (3) ausgebildet ist. Es ist Aufgabe der Erfindung, ein kostengünstiges und robustes Thermosiphonsystem mit hohem Wirkungsgrad bereit zu stellen.Gekennzeichnet ist das erfindungsgemäße Thermosiphonsystem (1) dadurch, dass ein Trennelement (4) im Gehäuse (2) angeordnet ist, das das Behältervolumen (3) in ein Absorbervolumen (6) und ein Speichervolumen (7) trennt, wobei das Absorbervolumen (6) im betriebsbereiten Zustand des Thermosiphonsystem (1) geodätisch oberhalb des Speichervolumens (7) angeordnet ist.

WO 2014/023831 A1

Solar Thermosiphon System

The invention relates to a solar thermosiphon system for heating a heat transfer fluid, as referred to in the generic part of claim 1.

A solar thermosiphon system serves to capture heat from solar energy by passive natural convection in a fluid circuit. Heat is transferred, from a surface absorbing the sun's rays, to a heat transfer fluid (or "solar fluid"), which transports heat away from the absorber. The heat transfer fluid is moved due to the differences in temperature and in density, without being circulated by a pump. As a rule, the heat transfer fluid employed is potable or non-potable water that can be fed directly onward for further use.

Thermosiphon systems in which absorber and storage chambers are integrated in a single structural unit are also called "integrated collector storage". Integrated collector storage systems are relatively widespread. They serve, particularly in countries with ample sunshine, as economical systems for heating drinking water with solar energy.

The simplest design for an integrated collector storage system of this kind is a black tank whose black exterior absorbs solar radiation and gives it off, in the form of heat, to the heat transfer fluid contained in the tank. An integrated collector storage system of this kind can be produced very economically. With this design, however, heating is uncontrolled and relatively slow; and therefore, hot water (or hot transfer fluid) can only be drawn off after a number of hours of intense insolation.

The invention now aims to overcome the drawbacks of the prior art by providing a thermosiphon system that is economical to produce, is very simple in construction and therefore robust, and has good efficiency.

The invention achieves these objectives through the features of claim 1. Beneficial further developments are covered in the dependent claims.

In the invention, a separating element is arranged in the housing, to divide the space inside the tank into an absorber chamber and a storage chamber, with the absorber chamber being bounded by at least part of the housing wall.

In the simplest case, the housing is formed by a closed, black, pipe with a separating element in it that divides the space inside the tank into an absorber chamber and a storage chamber. When the system is set up and operationally ready, the part of the housing wall that bounds the absorber chamber is oriented so that it is exposed to the sun's rays. Therefore, the housing may be inclined at an angle to horizontal. As a result, differences in temperature and density will occur between the heat transfer fluid (facing the absorbing surface) in the absorber chamber and the heat transfer fluid in the storage chamber. This leads to an upwelling current and mass flow of the heat transfer fluid, whereby heat is transported away from the absorber chamber. For this purpose, the absorber chamber and the storage chamber are connected fluid-conductively, with provision of at least a supply flow and a return flow for a closed circuit. In this regard, it is favourable if the absorber chamber and the separating element are oriented at an angle to horizontal, so that heated heat-transfer fluid can rise in the absorber chamber and fall in the storage chamber. For this, a vertical orientation is also possible. As a rule, the housing is elongated, and in particular cylindrical, in shape, with the separating element running longitudinally, parallel to the housing's central longitudinal axis. The housing can also have an inlet for adding heat

transfer fluid and an outlet for drawing heat transfer fluid off — which is required particularly when it is drinking water that is being heated.

In a preferred form of the invention, the absorber chamber is very much smaller than the storage chamber. This enables optimal heat transfer — and therefore large temperature increases — to occur in the absorber chamber, while at the same time providing adequate storage capacity due to the storage chamber being large in relation to the absorber chamber. Also, when there is no insolation, there should only be a small drop in the heat transfer fluid's temperature, because the storage chamber can generally be better insulated from the external environment than the absorber chamber can, and the absorber chamber has considerably less thermal transfer fluid in it than the storage chamber does.

Preferably, the part of the housing wall bounding the absorber chamber is in the form of a solar absorber. For example, the housing may be made of a black plastic — although other materials, particularly metals, are also suitable. The housing wall thus constitutes an absorber of very simple design, for absorbing the sun's rays. The overall result is thus a very simple, inexpensive, and robust structure.

The storage chamber and the absorber chamber may be connected to each other by way of least one inlet opening and at least one outlet opening. When the thermosiphon system is set up and operational, the outlet opening through which the heat transfer fluid flows from the absorber chamber to the storage chamber should, as far as possible, be positioned geodetically above the inlet opening through which the heat transfer fluid flows back from the storage chamber into the absorber chamber. Thus, due to heating, a mass flow occurs in the longitudinal direction between the separating element and the part of the housing facing the insolation, and from there back again into the storage chamber, with the direction of flow being uniquely defined. A high mass flow rate is

advantageous here, for high efficiency and for good stratification in the storage chamber.

In this regard, it is most preferable to provide a non-return valve in the inlet opening and/or the outlet opening. This non-return valve ensures that, when there is no insolation, no reverse flow will be set up, which would lead to the heat transfer fluid in the housing being cooled down. Instead, the heat transfer fluid can only flow through the absorber chamber when the heat transfer fluid is absorbing heat there.

The inlet and outlet openings can be formed at each end of the separating element. It is also possible to make the separating element shorter than the housing, in the longitudinal direction, so that the inlet opening and the outlet opening are formed by the free spaces between the separating element and the housing's end regions. In any case, no connecting lines are needed between the storage chamber and the absorber chamber; and thus a very simple, robust structure is obtained. Also, hydraulic resistance within the thermosiphon system is minimised, which is favourable for achieving a high mass flow rate, and therefore, high efficiency.

In a preferred form of the invention, the separating element runs essentially parallel to the part of the housing wall that bounds the absorber chamber, and it is possible to set a clear distance (i.e. a gap) between the separating element and the associated part of the housing wall. This makes it possible to set the height of the gap between the separating element and the housing, and to adjust the circulating volumetric flow in the absorber, in accordance with current, or common, set-up and operating conditions.

Preferably, the separating element and/or the housing — preferably the separating-element surface or housing surface facing into the absorber chamber — has at least one element projecting from it, connected to it, and/or formed on it, that serves to set the clear distance (i.e. the gap)

between the separating element and the associated part of the housing wall. For that purpose, the height of the at least one element is, in particular, settable. For each thermosiphon system, there may be one, or a plurality, or even a multiplicity of such elements, mounted on the separating element and/or the housing, and these elements may serve also as a reinforcing fin, a flow-guidance and flow-swirling element, and/or a spacer. A reinforcing fin increases the separating element's inherent stiffness and reduces unwanted changes in shape e.g. during mounting and/or due to heat. A flow-guidance and flow-swirling element will guide and distribute the flow of heat transfer fluid along the absorber chamber, break up laminar flows, create swirling and flow-intermixing, and bring about improved heat transfer from the housing to the heat transfer fluid. A spacer will ensure that a desired (minimum) absorber volume, through-flow, temperature, and/or volumetric flow, are maintained.

In an advantageous form of the invention, the element is an element for setting a minimum clear distance between the separating element and the associated part of the housing wall, said element being essentially rigid when the thermosiphon system is in operation. Such a rigid element may be formed on the planar separating element by e.g. deep drawing.

The separating element preferably runs at least partly parallel to the part of the housing bounding the absorber chamber, with the distance between the separating element and the associated part of the housing wall being between 2 mm and 20 mm, particularly between 3 mm and 10 mm, and especially 4 mm. The distance between the separating element and the housing wall has a great influence on heat transfer from the housing wall forming the absorber to the heat transfer fluid beneath it in the absorber chamber. An absorber-chamber height of 2 mm to 20 mm, particularly 4 mm, represents a good compromise between increased heat-losses and high temperature in the heat transfer fluid. The required distance can be set and maintained by means of e.g. spacers, which may, if desired, be

formed as an integral part of the separating element, and which serve to position the separating element with respect to the housing wall.

In an alternative form of the invention, the element for altering the clear distance between the separating element and the associated part of the housing wall is height-adjustable (length-adjustable) when the thermosiphon system is an operation. This element may, in particular, be an element whose height changes as a function of a temperature, i.e. the distance is set as a function of temperature. The element's height may either jump at a settable temperature value, particularly a required temperature or change-over temperature of the heat transfer fluid, in which case the change in the clear distance will occur suddenly or abruptly when a set temperature occurs; or else the element's height may be adjusted gradually over a temperature interval, in which case the clear distance will change gradually as the temperature changes. The height-adjustable element may be moved by motor, and/or hydraulically, pneumatically, magnetically, bimetallically, and/or thermally. If the element's height depends on temperature, the element's travel can be set by means of a temperature sensor — particularly one provided in or on the thermosiphon system — and a controller connected to it; and the element can be moved by means of an electric motor. Alternatively, the separating element's movement can be imparted to it by one or more bimetallic elements that change their shape, length, angle, or height, as a function of temperature. In another form of the invention, the element's movement can be due to a special expansion element: for instance a cylinder-and-piston arrangement or metal bellows filled with a gas, liquid, or wax that expands due to temperature, and changes a length dimension of the expansion element. The bimetallic elements, expansion element, and temperature sensor can be mounted in the thermosiphon system, within direct or indirect range of the heat transfer fluid.

Apart from height-adjustment being a function of temperature, it could also be a function of other variables, such as a time-dependent demand

profile that can be set by the user. If a user of the thermosiphon system needs hot water within a short space of time, then the distance between the housing and the separating element needs to be small, e.g. 2 mm to 4 mm, so that a large temperature increase per cycle will be set up along the absorber passage. However, the large temperature increase will entail higher heat-emission losses to the external environment. If, on the other hand, a user requires highly efficient transfer of solar radiation to the water throughout the entire day, then the distance needs to be great, for example 4 mm to 10 mm. This reduces the temperature increase per cycle, but also reduces heat losses due to emissions to the environment.

The separating element is preferably designed as a thermal insulator, with polyethylene foam or polypropylene foam, for example. The separating element may, however, also be in the form of a closed hollow chamber. With the separating element designed as a thermal insulator, better heat absorption during insolation is achieved, because the heat is not given off directly from the absorber chamber to the stored water, but instead, the heat transfer fluid in the absorber chamber is heated first. This leads to an increase in the available temperature in the absorber chamber and hence to a higher mass flow due to the greater, temperature-dependent, expansion of the heat transfer fluid, and finally to better temperature stratification in the storage chamber. When there is no incoming solar radiation, the separating element, as a thermal insulator, prevents heat from being given off from the storage chamber to the absorber chamber and the environment. Only the heat from the very small absorber chamber is emitted to the environment at this time, and so, after a period without insolation, for instance on the following morning, the heat transfer fluid will be at a higher temperature than in thermosiphon systems with no separating element.

In an advantageous form of the invention, the housing is circular-cylindrical, and the separating element has a C-shaped or Ω-shaped cross-section, and is supported with its longitudinal edges bearing upon

the housing's inside wall. The separating element's shape is essentially curved about its longitudinal axis; and its longitudinal edges likewise run parallel to its longitudinal axis. The separating element can thus be shaped like the Greek capital letter Omega: Ω. It will then be relatively easy to put the separating element into position inside the, e.g. tubular, housing without having to use any additional fastening elements. A press fit may be used. Often, however, just the friction alone, between the longitudinal edges and the inside wall, will be enough to hold the separating element securely. Particularly when the separating element extends laterally beyond the housing's central axis, the separating element can be kept in place securely by bearing upon the housing's inside wall, at the same time providing a good seal between the absorber chamber and the storage chamber.

An example of an embodiment of the invention is shown in the drawings, in which:

Fig. 1 is a longitudinal section taken through a solar thermosiphon system,

Fig. 2 is a cross-section taken through the thermosiphon system, and

Fig. 3 is a perspective view of a separating element.

A solar thermosiphon system 1 is shown in longitudinal section in Fig. 1. The thermosiphon system 1 is in the form of an integrated collector storage system, and has a tubular housing 2, closed off at each end, creating a tank space 3. This tank space 3 is divided into an absorber chamber 6 and a storage chamber 7 by means of a separating element 4 associated with an upward-oriented part 10 of the housing wall 5. Said part 10 of the housing wall 5 serves as an absorber. The absorber chamber 6 and storage chamber 7 are connected to one another by way of an inlet opening 8 and an outlet opening 9.

Due to incoming solar radiation, the geodetically upward facing housing wall 5, which serves as an absorber, is heated up. The heat is transferred from part 10 of the housing wall 5 to a heat transfer fluid, generally drinking water, in the absorber chamber 6. Due to the difference in temperature and density between the heated-up heat transfer fluid in the absorber chamber and the heat transfer fluid in the storage chamber 7, fluid circulation is set up, as indicated by arrows.

So that the flow direction is uniquely defined, the thermosiphon system 1, when installed and operational, is inclined at an angle (of e.g. 10° to 90°) to horizontal. The position of the outlet opening 9 is thus geodetically higher than the position of the inlet opening 8. It is also possible to arrange the thermosiphon system vertically (i.e. at an angle of 90° to horizontal).

A non-return valve 11, for instance a duckbill valve, is provided in the outlet opening 9. The non-return valve 11 prevents reversed circulation e.g. at night when there is no solar radiation striking the housing wall 5 and absorber surface.

The absorber chamber 6 is very much smaller than the storage chamber 7. As a result, optimal heat transfer occurs, with low heat transfer losses and a large increase in the temperature of the heat transfer fluid in the absorber chamber 6.

The separating element 4 is shorter in length than the housing 2, so the inlet opening 8 and the outlet opening 9 are formed by corresponding gaps between the housing 2 and the ends of the separating element 4. Thus, the thermosiphon system 1 only needs a very small number of components, and is therefore simple in construction, and robust.

The separating element 4 runs essentially parallel to the part 10 of the housing wall 5 that bounds the absorber chamber 6; and thus, with the

separating element's planar surface extending in the longitudinal and circumferential directions, and the clear distance (gap height) between the separating element 4 and part 10 of the housing wall 5, the absorber chamber 6 is formed. The clear distance corresponds to the length of element 14, and is settable. This element 14 may be an element 14 projecting from and/or connected to and/or formed on the separating element 4 and/or the associated part 10 of the housing wall 5, and serves to set the clear distance between the separating element 4 and part 10 of the housing wall 5. In Fig. 1, two rod-like elements 14 are shown, on the lower and upper end regions of the separating element 4. Not shown are possible additional elements 14 arranged on the separating element 4 at intervals along and around it in its longitudinal and circumferential directions. The at least one element 14 may be a rigid element which cannot be altered when the thermosiphon system is in operation, and which sets a fixed value for the clear distance, this being the minimum distance between the separating element 4 and the associated part 10 of the housing wall 5. On the other hand, the least one element 14 may be an element 14 that is height-adjustable (length-adjustable) during operation. Changing the height, i.e. the length, of element 14 will alter and set the clear distance, thereby also altering and setting the height of the flow gap and the size of the absorber chamber. Not shown are any actuators and/or sensors — needed for altering the height (i.e. length) of element 14 — that may be mounted inside, or outside, the housing.

Fig. 2 shows the thermosiphon system in cross-section. The housing is circular-cylindrical, being e.g. a black plastic pipe. The upper half of the housing 2 constitutes part 10 of the housing wall 5, and serves as the absorber surface, which is acted upon by the sun's rays, symbolised by arrows. As a result, the housing wall 5 is heated up and the heat is transferred to the heat transfer fluid in the absorber chamber 6. The separating element 4, designed as a thermal insulator, separates the absorber chamber 6 from the storage chamber 7; and fluid-conductive connection between the absorber chamber 6 and the storage chamber 7

is provided only at the ends of the thermosiphon system 1, as is shown in Fig. 1.

The separating element 4 has a capital-omega-shaped (Ω) cross-section and is supported with its longitudinal edges 12, 13 bearing upon the inside of the housing wall 5. In this way, the separating element 4 is positioned inside the circular cylindrical housing 2 and, at the same time, sealing is provided between the absorber chamber 6 and the storage chamber 7. This sealing does not need to be particularly highly fluid-tight.

Between the separating element 4 and the part 10 of the housing wall 5 bounding the absorber chamber, there is also at least one element 14 in the form of a spacer. During operation, this element 14 has e.g. a fixed, unalterable height (length) of 4 mm, thereby defining the height of the absorber chamber 6. A number of spacers may be provided, one after another, and not far apart, in the longitudinal and circumferential directions. As well as functioning as spacers, these elements 14 can also serve as flow-guidance elements and/or flow-swirling elements to swirl the flow of heat transfer fluid through the absorber chamber, for more effective heat absorption. When being inserted, the separating element 4, may be radially compressed a little by the longitudinal edges 12, 13 and the spacer 14 or spacers 14, so that the separating element 4 is held in place inside the housing 2 by friction and force, with no play or clatter. No additional connecting elements will then be needed.

Fig. 3 is a perspective view of a C-shaped separating element 4 with a multiplicity of rigid elements 14 arranged on it at intervals along and around its surface.

The inventive thermosiphon system constitutes an integrated collector storage system, with a housing divided by means of a passive component, namely a separating element, into an absorber chamber and a storage chamber. The absorber chamber is very much smaller than the

storage chamber. In the simplest embodiment, the housing is in the form of a black pipe, and the part of the housing wall bounding the absorber chamber constitutes a solar absorber. The same principle is, however, also applicable in so-called Sydney evacuated glass tubes, in which the housing constitutes the inner tube of the glass vacuum tube.

The inventive thermosiphon system has a very simple structure, yet has relatively high efficiency. Its absorber chamber and storage chamber are separated from each other by the separating element. In this way it is possible to achieve predetermined, stratified, heat distribution in the storage chamber, while, at the same time, the heat transfer fluid in the absorber chamber is heated up to relatively high temperatures. Thus, the heat transfer fluid is efficaciously heated, and so, the inventive thermosiphon system can, in particular, be used as a solar-powered system for heating drinking water — in developing countries, as well. Due to its simple construction and the small number of components required, the thermosiphon system is economical to produce; it is also very robust. The thermosiphon system also exhibits very low hydraulic resistance, because no additional conduction lines are needed between the storage chamber and the absorber chamber; instead, a flow of fluid can simply pass through openings in the separating element or through gaps between the housing and the ends of the separating element. At the same time, by means of one or more spacers, the separating element can be readily positioned inside the housing and, as need be, held there by friction and force. The overall result is optimised, controlled, heat capture, by defined fluid conduction; and earlier availability of heated heat-transfer fluid, i.e. hot water. At the same time, heat losses due to system stoppage are minimised.

2013301468 19 Feb 2018

Claims

1. A solar thermosiphon system for heating a heat transfer fluid, with a housing that has a tank space formed in it,

wherein a separating element, mounted in the housing, divides the tank space into an absorber chamber and a storage chamber, with the absorber chamber being bounded by part of the housing wall, and

wherein the housing is circular-cylindrical in shape, and the separating element has a C-shaped or Ω-shaped cross-section and is supported with its longitudinal edges bearing upon the inside wall.

2. A thermosiphon system as claimed in claim 1,
wherein the absorber chamber is very much smaller than the storage chamber.

3. A thermosiphon system as claimed in claim 1 or 2,
wherein the part of the housing wall that bounds the absorber chamber is designed as a solar absorber.

4. A thermosiphon system as claimed in any of the above claims,
wherein the storage chamber and the absorber chamber are connected to each other by way of at least one inlet opening and at least one outlet opening.

5. A thermosiphon system as claimed in claim 4,
wherein the inlet opening, and/or the outlet opening, has a non-return valve arranged in it.

6. A thermosiphon system as claimed in any of the above claims,
wherein the separating element runs essentially parallel to the part of the housing wall bounding the absorber chamber, and it is possible to set a

2013301468 19 Feb 2018

clear distance, i.e. a gap, between the separating element and said part of the housing wall.

7. A thermosiphon system as claimed in any of the above claims, wherein the separating element and/or the housing has at least one element projecting from it, and/or connected to it, and/or formed on it, which serves to set the clear distance between the separating element and part of the housing wall.

8. A thermosiphon system as claimed in claim 7, wherein the element for setting the minimum clear distance between the separating element and the associated part of the housing wall is an element that is essentially rigid when the thermosiphon system is in operation.

9. A thermosiphon system as claimed in any of the above claims, wherein the separating element runs at least partly parallel to the part of the housing wall bounding the absorber chamber, and the clear distance between the separating element and said part of the housing wall is between 2 mm and 20 mm, more particularly between 3 mm and 10 mm, and especially 4 mm.

10. A thermosiphon system as claimed in claim 7, wherein the element for setting the minimum clear distance between the separating element and the associated part of the housing wall is an element that is height-adjustable when the thermosiphon system is in operation.

11. A thermosiphon system as claimed in any of the above claims, wherein the separating element is designed as a thermal insulator.

2013301468 19 Feb 2018

12. A thermosiphon system as claimed in claim 7, wherein the separating element goes beyond the central axis of the housing.

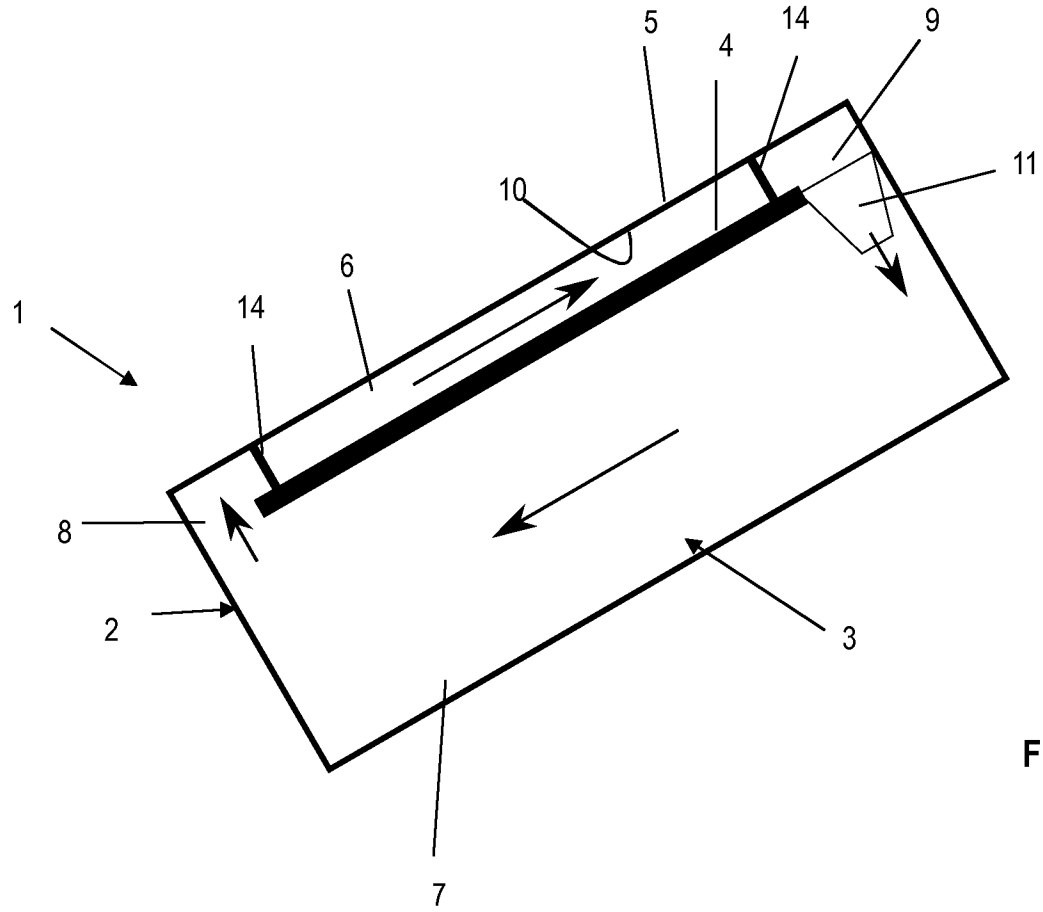

Fig. 1

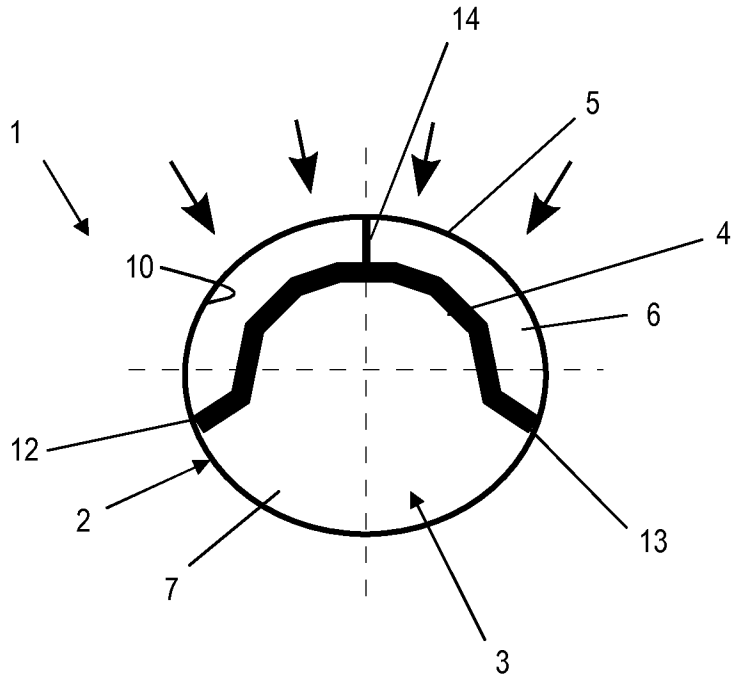

Fig. 2

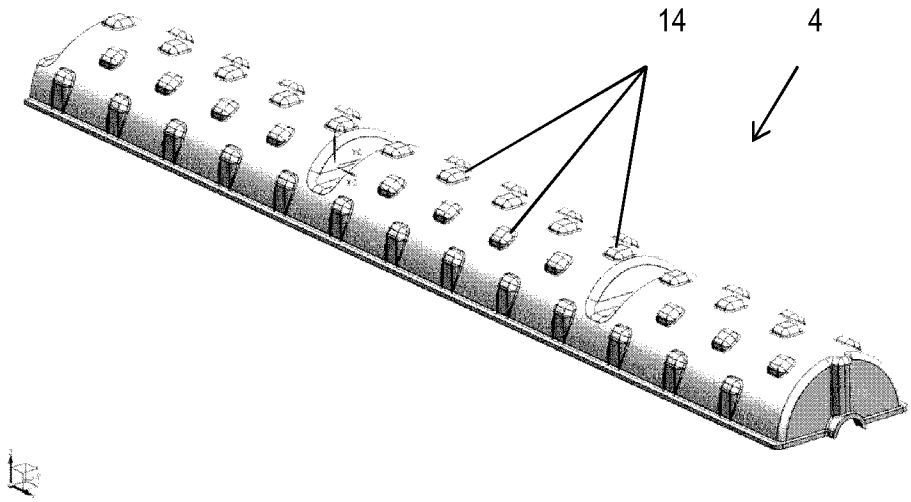

Fig. 3