June 11, 1929. W. K. RANKIN 1,717,260

CIRCUIT INTERRUPTER

Filed Sept. 14, 1921

Fig. 1.

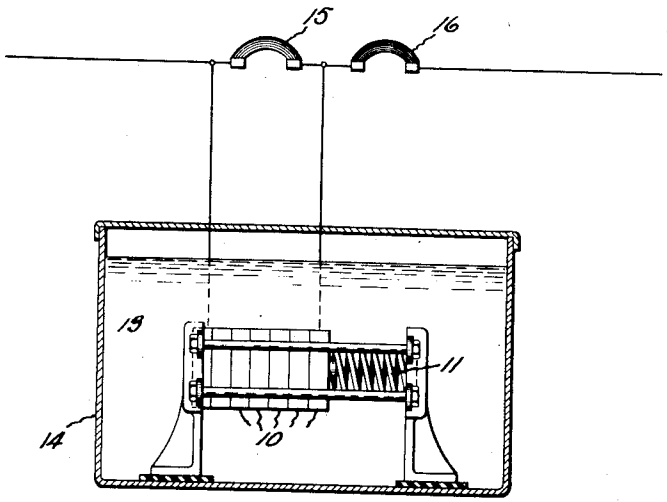

Fig. 2.

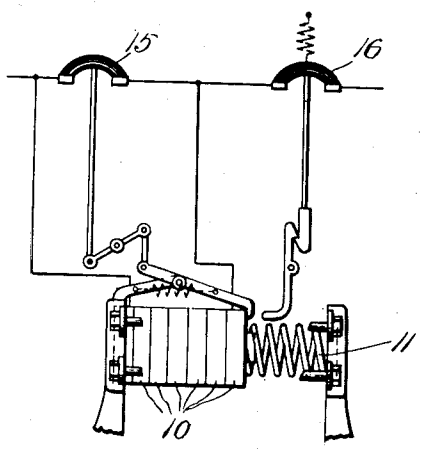

Inventor:
William K. Rankin,
by Albert G. Davis
His Attorney.

Patented June 11, 1929. 1,717,260

UNITED STATES PATENT OFFICE.

WILLIAM K. RANKIN, OF SCHENECTADY, NEW YORK, ASSIGNOR TO GENERAL ELECTRIC COMPANY, A CORPORATION OF NEW YORK.

CIRCUIT INTERRUPTER.

Application filed September 14, 1921. Serial No. 500,485.

This invention relates to apparatus for breaking high power circuits.

In its preferred embodiment, I employ a plurality of relatively movable conductors which normally lie in contact and are separable to break the circuit. These conductors are immersed in a medium which is vaporizable or expansible by heat and the arrangement is such that upon the expansion or vaporization of the medium the conductors are forced apart to break the circuit. The heat necessary to cause this expansion or vaporization is derived from the resistance offered to the passage of the high power current through the conductors.

Referring to the drawing, Fig. 1 illustrates one embodiment of my invention and Fig. 2 is a fragmentary view of the same showing it more in detail.

In the drawing the relatively movable conductors are shown as a series of carbon plates 10 which are normally pressed together by means of a spring 11. The series of plates or pile is immersed in oil or similar insulating fluid 13 contained within a vessel 14. The pile is connected in circuit as shown, there being in shunt to the same a switch 15, which is adapted to carry practically all the current when the circuit is closed. There is also a switch 16 in series with both the switch 15 and the carbon pile whose function is permanently to open the circuit after the switch 15 has opened and the carbon plates have separated to break the circuit.

The operation is as follows: The switches 15 and 16 being normally closed and the spring 11 forcing the carbon plates into close contact, the switch 15 is opened manually or automatically by means not shown transferring the line current from this switch to the carbon pile. The passage of the line current through the pile causes considerable heating with the result that the oil which is present to some extent between the plates is quickly vaporized and this vapor acting upon the plates forces them apart. Upon an actual breaking of the contacts between the plates, a plurality of arcs in series are formed, and these cause a further vaporization and dissociation of oil which in turn forces the plates farther apart until the circuit is finally broken and the arcs extinguished. The switch 16 is then opened and the spring 11 forces the plates back to their initial position. To reclose the circuit the switch 15 is first reclosed and then the switch 16.

Any suitable means may be employed to secure a proper sequence in the operation of the switches and the carbon pile. It is of course necessary that the switch 16 open only after the circuit has been broken at the carbon pile and before the spring has had time to reestablish the circuit by forcing the plates together. It is advisable to provide the switch 16 with some arc extinguishing means. The switch 16 may be opened by the movement of the plates, this switch remaining open after the return of the plates to normal contact-making position. It is necessary either that no arc form at the switch 15 or that any such arc be extinguished before the carbon plates are forced apart. It is advantageous for this reason to have the switch 15 of the oil breaker type. If desired, means may be employed which is movable with the switch 15 to hold the carbon plates together until the switch 15 is opened. Such a means may take the form of a toggle which holds the plates 10 together but is tripped to release the same when the switch 15 reaches its open position. This toggle may be constructed to assume its plate holding position when the spring 11 has forced the plates together.

While I have shown a series of plates immersed in oil, I do not wish to be understood to limit myself to any precise number of plates. In case but a few are employed, it is advisable to provide for their wide separation under the force of the expanding gases. I have relied in the preferred form of my invention for the production of heat to vaporize the liquid on the imperfect or partial contact btween the plates of the carbon pile. While this is advantageous because the roughened surfaces permit the oil to enter between the plates, I desire it to be understood that I do not wish to limit myslf to the use of carbon. As plates or bodies 10 of other materials will furnish a sufficient resistance at the contacts to cause the generation of heat necessary to vaporize the liquid, if the plates are immersed in an electrolyte or some poorly conducting liquid instead of oil, it may not in all cases be necessary to have the plates in contact as the liquid will be vaporized by the passage of current therethrough. In this case it will, however, be necessary to cause the electrodes to assume a position in

which they are not connected by the liquid conductor.

What I claim as new and desire to secure by Letters Patent of the United States, is:—

1. Means for interrupting the current flow in a circuit, comprising a vessel containing a liquid, a series of carbon bodies immersed in the liquid in said vessel, said bodies lying in contact with each other and adapted to carry the current which it is desired to interrupt, and said bodies being adapted to be separated by pressure due to vaporization of portions of the liquid between the bodies.

2. Means for breaking a circuit, comprising a vessel containing oil, a series of carbon plates immersed in the oil in said vessel, means for resiliently pressing the plates in contact with each other whereby the circuit may be completed therethrough, said plates being separable under pressure caused by the heating of the oil due to the current flowing through said plates.

3. In a circuit interrupting device, a vessel containing an insulating liquid, a series of carbon plates immersed in said liquid, resilient means normally forcing said plates together but permitting said plates to be separated under the influence of pressure caused by the heating of the liquid due to the passage of current through said plates, a switch in shunt to said plates, connecting means between the plates and said switch for holding said plates together until said switch is opened, a second switch in series with said first named switch and said plates and means responsive to the separation of said plates for opening said second switch.

4. In a circuit interrupting device, a vessel containing an insulating liquid, a series of carbon plates arranged in the vessel to be immersed in said liquid, resilient means normally forcing said plates together but permitting said plates to be separated under the influence of pressure caused by the heating of the liquid due to the passage of current through said plates, a switch in shunt to said plates, a second switch in series with said first named switch and said plates, means for insuring the opening of said first named switch prior to the separation of said plates, and means for opening said second switch after said plates have separated an amount sufficient to open the circuit therethrough.

5. Apparatus for interrupting an electric circuit comprising a main switch in the circuit, an arc extinguishing switch connected in shunt therewith comprising a carbon pile immersed in an insulating liquid, and means yieldingly pressing together the elements of said carbon pile.

6. Switching apparatus comprising a main switch, an arc extinguishing switch connected in shunt therewith for finally interrupting a circuit controlled by the main switch, said arc extinguishing switch comprising a vessel containing insulating liquid, resistance plates immersed therein and means for resiliently pressing the plates together whereby said plates are separable by pressure due to vaporization of the liquid therebetween when the main switch is opened, and means connecting said switches for preventing the separation of the plates while the main switch is closed.

7. Switching apparatus comprising a first switch, a second switch in series therewith, arc extinguishing means for finally interrupting a circuit controlled by said switches connected in shunt with said first switch, means cooperating with said first switch for preventing the operation of said arc extinguishing means until the first switch is opened and means for preventing the opening of the second switch until the arc extinguishing means has operated to a predetermined open circuit position.

8. Circuit controlling apparatus comprising a main current carrying switch, a variable resistance device in shunt with said switch comprising a series of contiguous plates, and means yieldingly pressing said plates together, whereby when the main switch is opened a shunt path is provided through said series of plates the resistance of which path subsequently increases in accordance with an increase of resistance between adjacent plates.

In witness whereof, I have hereunto set my hand this 13th day of September 1921.

WILLIAM K. RANKIN.